Appendix J

Final** Transportation Discipline Report **(Part 3)

King County

Appendix A. Methods and Assumptions

transpogroup
WHAT TRANSPORTATION CAN BE.

MEMORANDUM

Date:	April 16, 2020	**TG:**	1.19215.00
To:	Kinyan Lui – King County Solid Waste Division		
From:	Stefanie Herzstein, PE, PTOE and Kassi Leingang, PE – Transpo Group		
cc:	Phil Coughlan – Herrera		
Subject:	Cedar Hills Regional Landfill Transportation Analysis Methods and Assumptions		

The purpose of this memorandum is to document the methods and assumptions to be utilized in conducting the transportation analysis for the Cedar Hills Regional Landfill (CHRLF) 2020 Site Development Plan Environmental Impact Statement (EIS) and solicit feedback and approval of these methods and assumptions by the Washington State Department of Transportation (WSDOT), King County Roads Services, City of Renton and City of Maple Valley. Transpo will incorporate feedback from these agencies into the transportation analysis for the CHRLF Draft EIS.

An overview of alternatives is presented along with a discussion regarding the study time periods, trip generation estimates, study area, distribution and assignment, traffic volumes, traffic operations and construction impacts.

Overview of EIS Alternatives

Four alternatives will be evaluated as part of the EIS including:

- **No Action Alternative** – landfill operations as currently permitted and the main landfill support facilities remaining in their current location. The landfill is estimated to reach capacity by mid-2028.
- **Action Alternative 1** – Expand capacity of the landfill. Under this Alternative, the landfill is estimated to reach capacity by mid-2037. Relocation of the main landfill support facilities either north or south on-site or to a site adjacent to the Renton Recycling and Transfer Station.
- **Action Alternative 2** – Expand capacity of the landfill. Under this Alternative, the landfill is estimated to reach capacity by early-2038. Relocation of the main landfill support facilities either north or south on-site or to a site adjacent to the Renton Recycling and Transfer Station.
- **Action Alternative 3** – Expand capacity of the landfill. Under this Alternative, the landfill is estimated to reach capacity by late 2046. Relocation of the main landfill support facilities either north or south on-site or to a site adjacent to the Renton Recycling and Transfer Station.

Projected yearly landfill operations are consistent for all the Alternatives with tonnage of waste processed growing incrementally each year. For the Action Alternative, there will be periodic construction associated with the expansion of landfill capacity that could result in additional off-site trips for up to four months. Additional detail on the evaluation of construction is provided later in this document. The main difference between the Alternatives is the estimated year the CHRLF reaches capacity, the areas of the existing landfill footprint used to expand capacity, and the amount of construction necessary for the expanded capacity.

Each Action Alternative has three options related to relocation of the main landfill support facilities including:

- **Option 1 (CHRLF South)** – Relocate and build main landfill support facilities in the south including, but not limited to the scale/scalehouse, truck wash, cat shack, some trailer parking, the truck maintenance building, employee parking, office space, and laboratory space.
- **Option 2 (CHRLF North)** – Relocate and build main landfill support facilities in the north including, but not limited to the truck maintenance building, parking, office space, and laboratory space. Relocate and build scale/scalehouse, truck wash, cat shack and some trailer parking in the south.
- **Option 3 (Renton Site)** – Relocate and build main landfill support facilities at an off-site location adjacent to the Renton Recycling and Transfer Station including, but not limited to the truck maintenance building, most tractor and trailer parking, employee parking, office space, and lab/storage space. Relocate and build the scale/scalehouse, truck wash, cat shack, operator break room, locker room, office space, and some trailer parking in the south.

It is anticipated that the relocation of the main support facilities could occur sometime between 2023 and 2028.

Study Periods

The Action Alternatives include expanding CHRLF capacity beginning around 2025/2026, and reaching capacity estimated between 2037 and 2046. The No Action Alternative is estimated to reach capacity by mid-2028. Under all Alternatives, some final construction would occur up to approximately 18 months after the landfill reaches capacity. In addition, relocation of the main support facilities (Options 1-3) could occur between 2023 and 2028. Based on the various years of opening (i.e., beginning the landfill capacity expansion) and estimated years the landfill reaches capacity as well as an evaluation of anticipated offsite soil import/exports by Action Alternative, the following horizon years will be studied:

- **Existing** – Representing the current 2020 affected environment
- **Opening Year** – Representing an approximate year 2025 when the landfill capacity expansion would begin and the support facilities would be relocated
- **Design Year** – Representing 2040 consistent with the surrounding jurisdictions long-term planning horizon

The Opening Year and Design Year horizons are consistent with planning horizons for the surrounding communities. The Opening Year is within the 6-year window for transportation improvement programs and capital facilities planning of the surrounding jurisdictions. The current adopted Comprehensive Plans for both Maple Valley and Renton have a long-range horizon year of 2040 consistent with the Design Year.

The traffic analysis will focus on the weekday AM, Midday and PM peak hour in the CHRLF area. The analysis will focus on the weekday PM peak hour in the Renton area where the combined impacts of the Alternatives and background conditions will be highest (see Figure 1 and Table 3). Due to the current COVID-19 conditions, the ability to collect traffic data is limited; therefore, if data is available within the Renton study area, evaluation of weekday AM and Midday peak hour conditions will be considered on a case-by-case basis.

Trip Generation

The trip generation was estimated based on the existing CHRLF operations and traffic data and future forecasts of waste generation and for each of the different site users. CHRLF operates seven (7) days a week from approximately 5 a.m. to 8 p.m. The facility is generally closed to the public and waste collected from the public is delivered to the King County recycling and transfer station facilities. Project trip generation estimates are provided for the EIS Alternatives including daily weekday, Saturday and Sunday as well as weekday AM, midday and PM peak hours. First existing trip generation is described then forecasts of trip generation for EIS Alternatives is discussed.

Existing

Determining the existing trip generation for the CHRLF provides the foundation for forecasting future CHRLF trips and forecasting net new trips by EIS Alternative. The existing trip generation of the site is comprised of the following users:

- King County Solid Waste Division (KCSWD) Waste Transfer Vehicles (to/from the KCSWD recycling and transfer stations)
- Commercial-Direct haul[1] and Other[2] trips directly to CHRLF
- Staff
    - Employees
    - Other including Bio-Energy Washington (BEW), vendors, contractors and other visitors

The existing trips were based on KCSWD scale data for CHRLF and hourly traffic counts collected at the site access in January 2020 (see Attachment A). The scale data captures all haul related transactions for a 3-year period (2017-2019). The traffic counts include all trips to/from CHRLF for 1 week including Saturday and Sunday. Where appropriate and available, the scale data was used for the trip generation estimates since it is a larger and more comprehensive data set. The trip generation approach for each user is:

- **KCSWD Waste Transfer** – The existing daily transactions for the KCSWD waste transfer vehicles trips was based on 2017-2019 scale data at CHRLF. These transactions were converted to trips by multiplying the transactions by 2 accounting for the inbound and outbound trip. The existing January 2020 traffic counts were used for the time of day distribution and applied to the daily trips rather than the scale data due to the haul trips arriving in the evenings and departing in the mornings (i.e., staying at the landfill overnight). The scale data only captures the inbound trip and the existing January 2020 traffic counts reflect the morning outbound trips in the distribution.
- **Commercial Direct-Haul and Other** – The existing daily transactions for the commercial-direct and other haul trips was based on 2017-2019 scale data at CHRLF. These transactions were converted to trips by multiplying the transactions by 2 accounting for the inbound and outbound trip. The trips were distributed throughout the day based on the scale data since these trips enter and leave the site during the same time period.
- **Staff** – The existing number of employees and typical other users was provided by KCSWD. The number of daily trips associated with employees and others was estimated based on existing daily traffic counts collected at the site.

[1] This is traffic that is associated with the direct haul of full waste trailers by commercial-haulers such as Waste Management, Republic, Waste Connections, and Recology.

[2] This includes all other traffic not related to the commercial-haulers. These users are limited and may or may not have commercial accounts with King County. This traffic includes multiple vehicle types such as sedans, pick-up trucks, truck/trailer combinations, and commercial users such as landscape companies.

The existing CHRLF total weekday, Saturday and Sunday daily trip generation based on the data sets described above were confirmed to be consistent with the existing access traffic counts. Table 1 provides a summary of the existing daily trip generation. Table 1 shows there are approximately 800 weekday daily trips to/from CHRLF.

Table 1. Existing Daily Trip Generation Summary at CHRLF

User	Average Haul Trips[1]	Staff Trips		Total Trips
		Employees	Other	
Average Weekday				
KCSWD Waste Transfer Trucks	126	-	-	*252*
Commercial Direct Haul	14	-	-	*28*
Other Haul	5	-	-	*10*
Staff[2]	-	*193*	*68*	*522*
Total Trips	**145**	**193**	**68**	**812**
Existing Weekday Counts[3]				***800***
Saturday				
KCSWD Waste Transfer Trucks	71	-	-	*142*
Commercial Direct Haul	0	-	-	*0*
Other Haul	0	-	-	*0*
Staff	-	*36*	*13*	*98*
Total Trips	**71**	**36**	**13**	**240**
Existing Saturday Counts[3]				***312***
Sunday				
KCSWD Waste Transfer Trucks	54	-	-	*108*
Commercial Direct Haul	0	-	-	*0*
Other Haul	0	-	-	*0*
Staff	-	*36*	*13*	*98*
Total Trips	**54**	**36**	**13**	**206**
Existing Sunday Counts[3]				***204***
Weekly Total Trips				**4,506**
Existing Weekly Counts[3]				***4,366***

1. Daily Transactions based on 2017-2019 scale data for the Cedar Hills site.
2. Employee/Visitor Trips based on data provided by KC.
3. January 2020 traffic counts (see Attachment A).

EIS Alternatives

Trip generation forecasts were developed for the No Action and Action Alternatives for the future Opening Year, Design Year, and estimated year the CHRLF reaches capacity for each Alternative. The daily future forecasts were developed by growing existing trips as well as adding in truck trips associated with offsite import and export of soil. There will be two types of offsite import and export of soil related to: (1) continued landfill operations and (2) construction of additional landfill capacity. Trips associated with construction are temporary and will be part of the Construction Impacts analysis (see page 12 for assumptions and methods). The offsite soil import and export truck trips associated with continued operations of the landfill are called “operational trips” in this study and are part of the primary trip generation forecast.

Growing Existing Trips

Existing haul and staffing trips were determined based on future growth projections provided by KCSWD.

The existing daily KC, commercial direct-haul and other-haul user trips were grown based on the KCSWD tonnage forecasts for the system at each horizon year. The projected annual haul trip growth is consistent for all Alternatives (including No Action). In addition, with Action Alternatives Option 3 (the relocation of support facilities to the Renton site), waste transfer trucks and trailers from CHRLF would be stored at the Renton facility. The waste transfer trucks would leave the Renton facility in the morning (prior to the weekday AM commuter peak period) and travel to recycling and transfer stations. In the evening, the waste transfer trucks would travel from the CHRLF or one of the KCSWD Recycling and Transfer Stations to the Renton facility storage after the weekday PM commuter peak period. There are 50 existing trucks being stored at CHRLF. Future trucks being stored was forecasted applying the same growth rate as the KCSWD waste transfer trips consistent with the increase in waste tonnage per year.

The daily trips of the staff were grown based on the anticipated increases provided by KCSWD. The No Action and Action Alternatives have the same total future staffing projections; however, with the Action Alternatives Option 3 some of the staff would be at the Renton site. Approximately 2/3 of the staff trips are assumed at the Renton site with Option 3.

Operational Trips

As described previously, the operational trips represent importing and exporting of soil as part of continued operations of the landfill and do not include construction trips. These trips would occur with the Action Alternatives periodically through the life of the project and at the estimated year CHRLF reaches capacity for the No Action Alternative. Forecasts of monthly operational trips by year for the life of the landfill were provided by KCSWD for each Alternative. It was assumed these import/export trips would occur 7 days a week for up to 8 hours a day.

Trip generation considers new trips that would be generated by the Action Alternatives relative to the No Action condition. The No Action Alternative represents the current permitted condition that would result in continued operations of CHRLF until approximately mid-2028. The evaluation of Opening Year (2025) conditions considers the already permitted No Action Alternative to determine the net new trips that would occur with the Action Alternatives. The Design Year (2040) conditions considers that the CHRLF would not be accepting waste under the No Action Alternative given the mid-2028 estimated year CHRLF reaches capacity; therefore, no operational trips would be generated by the No Action Alternative. Based on the method described above, the detailed trip generation forecasts are included in Attachment B. A summary of the weekday daily net new trips for the Alternatives is provided in Table 2.

Table 2. Estimated Weekday Daily Trip Generation Summary – By Alternative and Location

Alternative	Existing	Opening Year	Design Year	Estimated Capacity Year 2028	2037	2038	2046
Total Trips at CHRLF	812	-	-	-	-	-	-
No Action	-	884	340	936	-	-	-
Options 1 and 2 (Maintenance at CHRLF)							
Alternative 1	-	926	340[1]	-	1,000	-	-
Alternative 2	-	884	340[1]	-	-	994	-
Alternative 3	-	884	1,028	-	-	-	1,058
Options 1 and 2 – Highest Daily New Trips[2] (Relative to No Action)	**-**	***42***	***688***				
Option 3 (Maintenance at Renton)							
Alternative 1 (CHRLF)	-	552	92[1]	-	626	-	-
Alternative 1 (Renton)	-	482	248[1]	-	502	-	-
Alternative 1 Total Trips		**1,034**	**340**		**1,128**		
Alternative 2 (CHRLF)	-	510	92[1]	-	-	620	-
Alternative 2 (Renton)	-	482	248[1]	-	-	504	-
Alternative 2 Total Trips		**992**	**340**			**1,124**	
Alternative 3 (CHRLF)	-	510	654	-	-	-	684
Alternative 3 (Renton)	-	482	513	-	-	-	523
Alternative 3 Total Trips		**992**	**1,167**				**1,207**
Option 3 – Highest Total Daily New Trips[2] (Relative to No Action)	**-**	***150***	***827***				

1. The design year trip generation for these alternatives reflects only the remaining staffing related trips since the facilities would have reached capacity before the horizon year of 2040.
2. This represent the No Action daily trips minus the Action Alternative that generates the most trips, which is Alternative 1 for Opening Year and Alternative 3 for the Design Year.

As shown in Table 2, for Options 1, 2 and 3, Alternative 1 represents the highest weekday trip generation for the Opening Year and Alternative 3 represents the highest trip generation for the Design Year and Estimated Capacity Year. The Estimated Capacity Year weekday trip generation for Alternative 3 is only slightly more than the Design Year trip generation.

The net new daily trips for the Opening Year conditions are estimated to be 42 trips for Options 1 and 2 under Alternative 1 and 150 trips for Option 3 under Alternative 3. The net new daily trips for the Design Year conditions are estimated to be 1,028 trips for Options 1 and 2 and 1,167 trips for Option 3. The Design Year new trip generation is larger than the opening year because the No Action condition would have reached capacity and trips are limited to the remaining staffing associated with maintenance of the environmental control systems.

The CHRLF EIS analysis will focus on a detailed quantitative evaluation of the No Action Alternative as well as the Action Alternatives generating the highest trip generation for the Opening Year and Design Year horizons (i.e., Alternatives 1 and 3, respectively). The evaluation for Options 1 and 2 will focus on the vicinity of CHRLF and Option 3 will focus on the vicinity of the Renton site. A comparative qualitative discussion will be provided for the other Action Alternatives.

The net new trips by hour for Alternatives 1 and 3 by option are illustrated on Figures 1 and 2 for the Opening Year and Design Year conditions, respectively.

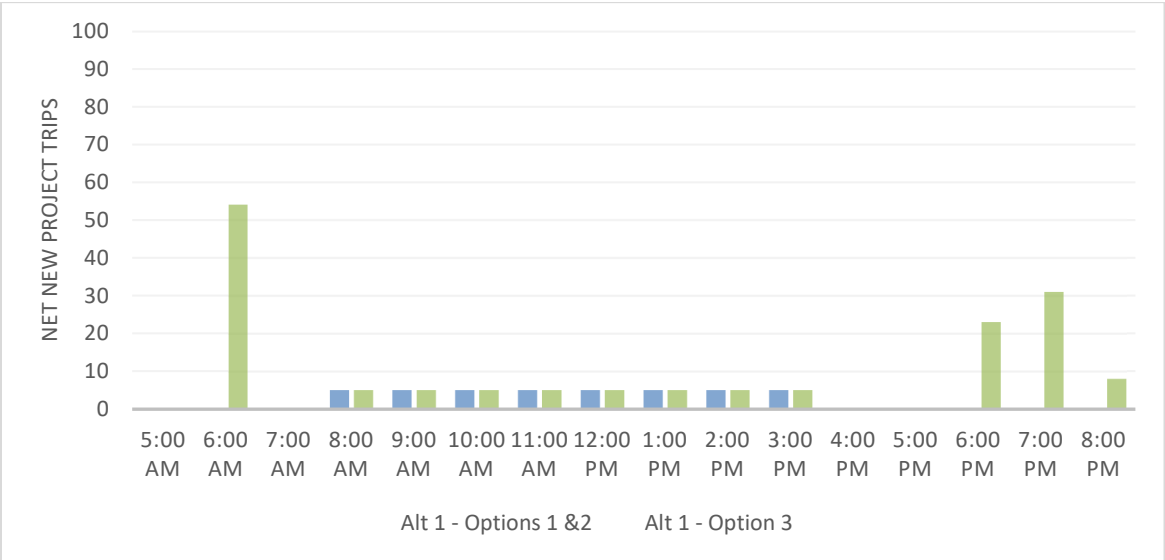

Figure 1 – CHRLF Alternatives 1 and 3 Hourly Net New Trips by Option (Opening Year)

As shown on Figure 1, under Opening Year conditions, the hourly net new trips are low with up to 5 trips between 8 a.m. and 4 p.m. Additionally, with Option 3, there are forecast to be net new trips outside the weekday AM and PM peak commuter periods due to the KCSWD Waste Transfer trips leaving the Renton site in the morning and returning in the evening.

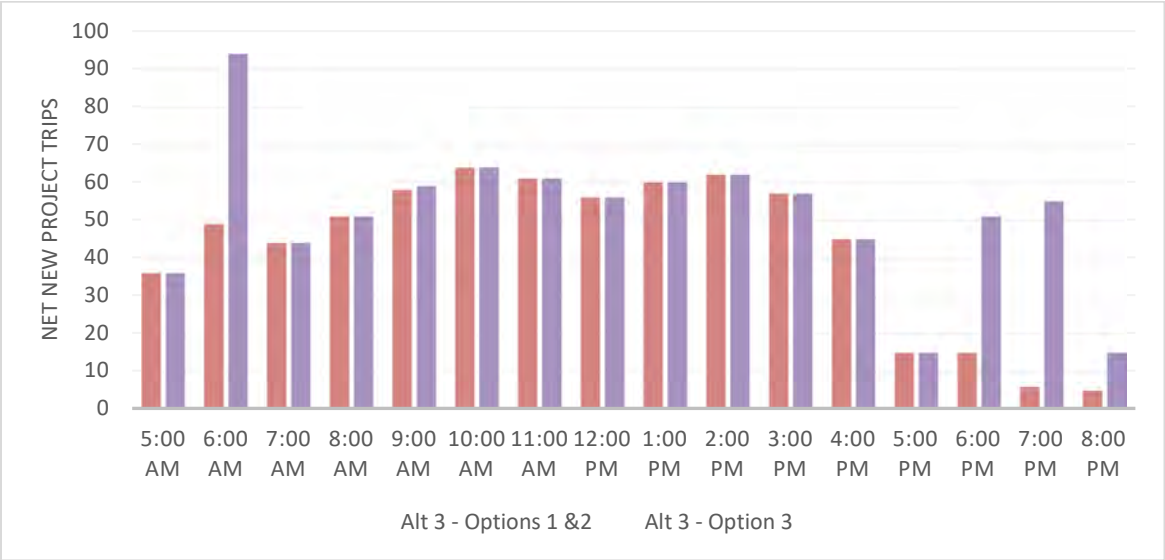

Figure 2 – CHRLF Alternatives 1 and 3 Hourly Net New Trips by Option (Design Year)

During the Design Year conditions, Figure 2 shows there are estimated to be approximately 80-90 net new hourly trips throughout the day with a peak approximately 95 net new trips under Option 3 at 6 a.m. associated with KCSWD Waste Transfer trips leaving the Renton site as well as staff entering the site.

Trip Distribution and Assignment

Trip distribution is based on existing travel patterns for all users, an understanding of KCSWD waste transfer routes to/from the recycling and transfer stations and for import/exports as well as the Cedar Hills Regional Landfill Site Development Alternatives Traffic Study, August 2017 by Casseday Consulting (herein 2017 Traffic Study). The distribution considers both the CHRLF site vicinity and the Renton site.

Based on the location of the recycling and transfer stations relative to the CHRLF, the KCSWD waste transfer vehicles were distributed such that the trips are all to/from the north along SR 169 with the exception of trips associated with Enumclaw which are less than 5 percent of the total haul loads. The same travel pattern was assumed for the operational import and export trips.

For Option 3, in the vicinity of the Renton site, the distribution assumes the following:

- **KCSWD Waste Transfer Vehicles** – The trucks at the end of the day depart from CHRLF or one of the KCSWD Recycling and Transfer Stations and travel to the Renton site northbound along the SR 169 corridor. In the morning, the trucks depart the Renton site to the recycling and transfer stations primarily using the I-405 ramps via NE 3rd Street. These trips occur prior to the weekday AM commuter peak hour and after the weekday PM evening peak hour.
- **Employee Trips** – Approximately 2/3 of the employees are redirected to be at the proposed Renton site rather than the CHRLF. Travel patterns for employees are based on the *OntheMap* Census data, which shows where people work and live in the area and provides an understanding how they would travel.

The proposed project trip distribution for the area around the CHRLF and Renton site are included in Attachment C. Based on the trip distribution, Table 3 summarizes the Options 1, 2, and 3 weekday AM, Midday and PM peak hour net new trips for Alternative 1 for Opening Year conditions and Alternative 3 for Design Year conditions at key intersections near the CHRLF and Renton sites.

Table 3. Estimated CHRLF Alternatives Net New Trip Assignment at Key Intersections

Alternative	Opening Year Trips[1]			Design Year Trips[2]		
	AM	Midday	PM	AM	Midday	PM
Options 1 and 2						
228th Ave SE/Cedar Grove Rd SE	5	5	0	44	62	45
SE Lake Francis Rd/Cedar Grove Rd SE	5	5	0	43	60	42
SR 169/SE Renton Maple Valley Rd/ Cedar Grove Rd SE	5	5	0	43	60	42
Option 3						
228th Ave SE/Cedar Grove Rd SE	-6	-14	-16	40	45	-7
SE Lake Francis Rd/Cedar Grove Rd SE	-5	-12	-14	40	46	-5
SR 169/SE Renton Maple Valley Rd/ Cedar Grove Rd SE	-3	-8	-9	42	50	0
154th Pl SE/SR 169/SE Renton Maple Valley Rd	3	1	-1	40	48	9
I-405 Northbound Ramps/SR 169/ SE Renton Maple Valley Rd	16	22	30	53	69	40
I-405 Southbound On-Ramp/SR 169/ SE Renton Maple Valley Rd/SR 900/Sunset Blvd N	19	26	37	47	61	45
SR 900/Sunset Blvd N/NE 3rd St	20	30	44	39	56	49
Monterey Dr NE/NE 3rd St	20	31	45	26	40	46
Edmonds Ave SE/NE 3rd St	20	31	45	26	40	46
Jefferson Ave NE/NE 3rd St/NE 4th St	22	34	50	28	43	51

1. This represents Alternative 1 trips for both options.
2. This represents Alternative 3 trips for both options.

Study Area

The recommended CHRLF and Renton site study areas were determined based on the trip generation, distribution and net new trip assignment. The study area will focus on the vicinity of the CHRLF for all Action Alternatives (Options 1-3) and additionally in the vicinity of the Renton site for Action Alternatives Option 3.

The proposed CHRLF study area intersections and jurisdictions are (see Figure 3):

1. 228th Avenue SE/Cedar Grove Road SE *(King County)*
2. SE Lake Francis Road/Cedar Grove Road SE *(King County)*
3. State Route (SR) 169/SE Renton Maple Valley Road/Cedar Grove Road SE *(WSDOT)*

Appendix A: Methods and Assumptions

Figure 3 – Proposed CHRLF Study Area and Intersections (Options 1-3)

In addition to the above intersections, the following Renton site study area is recommended for Option 3 (see Figure 4):

4. Interstate (I) 405 Northbound Ramps/SR 169/ SE Renton Maple Valley Road *(WSDOT)*
5. I-405 Southbound On-Ramp/SR 169/ SE Renton Maple Valley Road/SR 900/Sunset Boulevard N *(WSDOT)*
6. SR 900/Sunset Boulevard N/NE 3rd Street *(WSDOT)*
7. Monterey Dr NE/NE 3rd Street *(Renton)*
8. Edmonds Avenue SE/NE 3rd Street *(Renton)*
9. Jefferson Avenue NE/NE 3rd Street/NE 4th Street *(Renton)*

The City of Renton *Traffic Impact Analysis Policy Guidelines for new Development,* 2016 establishes that the study area should include all roadways and intersections that would experience a 5 percent increase in peak hour traffic volumes as a result of the proposed project. Given the net new trips (see Table 3), it is likely that increases in traffic volumes at the study intersections would be less than 5 percent. Transpo will confirm that no additional intersections in the Renton study area should be included in the analysis after receiving traffic volume data from Renton and WSDOT.

Figure 4 – Additional Option 3 Renton Site Proposed Study Area and Intersections

The analysis of study intersections will be performed consistent with the applicable jurisdiction TIS guidelines and based on coordination with King County, WSDOT and City of Renton staff.

Traffic Volumes

The proposed methodology of the existing and future traffic volumes forecasting is provided below.

Existing

Existing weekday peak hour conditions will utilize the traffic counts from January 2020 as well as the 2017 Traffic Study for study intersections 1-3. Traffic counts will be provided by the City of Renton and WSDOT for study intersections 4-10.[3] As noted previously, given the current COVID-19 impacts on travel there is no ability to collect existing traffic data within the current project schedule. All peak hour traffic volumes will be grown to existing 2020 conditions by applying an annual growth rate of 2 percent.

Future

The No Action Alternative forecasts will be determined and then project trips will be added to form the basis of the Action Alternatives analysis. No Action traffic volumes for the Opening Year and Design Year will be determined using two different methods described below.

[3] Due to the low traffic volumes beginning early March 2020 resulting from COVID-19 caused by the coronavirus and associated Washington State Governor's executive order and Public Health recommendations, peak hour counts will need to be based on previously collected counts.

Opening Year

The Opening Year (2025) forecast for the No Action Alternative will be determined by applying an average annual growth rate to existing traffic volumes and then adding traffic from pipeline projects in the study area. The annual growth rate will be based on input from City, County and WSDOT staff; however, based on previous studies in the area it is anticipated a 2 to 3 percent growth rate will be applied. The Opening Year Action Alternative forecasts will be developed by adding trip generation based on Alternative 1 for Options 1, 2 and 3.

Design Year

The Design Year (2040) forecast for the No Action Alternative will be developed using the applicable travel demand model for the study areas. Traffic associated with the reduction in traffic at the CHRLF will be removed from the Design Year forecasts since the facility will have reached capacity under the No Action Alternative and trips are limited to remaining staff associated with maintenance of the environmental control systems. Transpo will review the Renton, Maple Valley or Puget Sound Regional Council (PSRC) travel demand models to determine the most appropriate model for forecasting with consideration of detail in the study area and how recently the model was updated. Additional manual adjustments may made to the intersection forecasts to “smooth” the traffic forecasts between intersections and to account for major changes in travel patterns with capacity improvements or other changes in the roadway system. The travel demand models provide weekday PM peak hour forecasts; therefore, weekday AM and Midday peak hour forecasts for the No Action Alternative will be developed through their relationship with the existing PM peak hour traffic counts. The Design Year Action Alternative forecasts will be developed by adding trip generation based on Alternative 3 for Options 1, 2 and 3.

Traffic Operations

The following section summarizes proposed methodology for evaluating the existing and future traffic operations at the study intersections.

The operational characteristics of an intersection are determined by calculating the intersection level of service (LOS). The LOS analysis was completed based on procedures identified in the *Highway Capacity Manual* (HCM) using *Synchro 10*. The most recent version of HCM 6th Edition was used to evaluate the intersections. Where conditions at an intersection are not able to be evaluated using the 6th Edition HCM methodology, the intersections will be evaluated using the HCM 2000 methods. These locations will be noted in the summary of results. Signal timing and phasing information will be obtained from the respective controlling jurisdiction for each signalized intersection. At signalized intersections, LOS is measured in average control delay per vehicle and is typically reported using the intersection delay. At unsignalized side-street, stop-controlled intersections, LOS is measured by the average delay on the worst-movement of the intersection. Traffic operations and average vehicle delay for an intersection can be described qualitatively with a range of levels of service (LOS A through LOS F), with LOS A indicating free-flowing traffic and LOS F indicating extreme congestion and long vehicle delays.

Attachment D also outlines the assumptions related to intersection operations analyses including channelization, volumes, heavy vehicle percentages, peak hour factors, and other traffic operations analysis parameters for the existing and future conditions.

Project impacts will be identified by comparing the intersection operations for the No Action Alternative to the Action Alternatives.

LOS standards for the study intersections will be based on those adopted by the responsible jurisdiction as of April 3, 2020 and included in the following documents:

- *Washington State Department of Transportation Development Services Manual M3007.011 (April 2016),* Chapter 4: Analyzing Land-Use Proposals,
- King County Code *Mitigation Payment System and Intersection Standards*, PUT-10-3-3 (PR)
- Adopted Level of Service Standards for Regionally Significant State Highways, http://www.psrc.org/transportation/t2040/los/, *Puget Sound Regional Council (PSRC)*,
- *Renton Comprehensive Plan*, Adopted June 22, 2015, amended December 10, 2018

Construction

For the Action Alternatives, there will be periodic construction that could result in off-site trips higher than typical for up to four (4) months. Construction activities would relate to import and exporting of material and soils as well as bringing construction equipment to and from the site. These temporary construction trips would be added to the typical daily trip generation of the CHRLF Alternatives. The most intense construction activity that would impact the off-site transportation system is estimated to occur in 2025 or 2026 (depending on the Alternative) for up to a four (4) month period. Construction is not anticipated to occur each year during operations and will be a temporary impact. The annual estimated construction trips for the capacity expansion of CHRLF are shown for each Alternative on Figure 5.

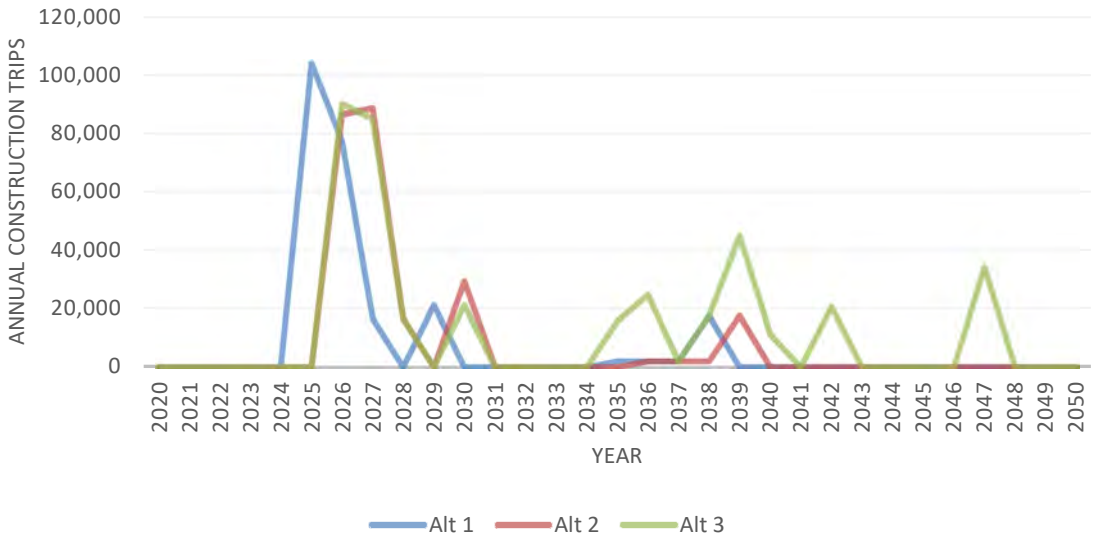

Figure 5 – Annual Construction Trips

As shown on the figure, the peak annual construction trips for the site is estimated to occur in 2025 for Alternative 1. The greatest construction related trips are estimated to occur between 2025 and 2027 for all Alternatives. The intensity of construction related trips during the 2025-2027 period is estimated to be greatest during the 4th month of construction based on the plan for import and export of soils and equipment. Estimated annual, peak monthly and hourly construction trips for each Alternative are summarized below in Table 4.

Table 4. Estimated Peak Construction Trips

Year	Alternative 1			Alternative 2			Alternative 3		
	Total Annual Trips[1]	Peak Monthly Trips[2]	Peak Hourly Trips[3]	Total Annual Trips	Peak Monthly Trips	Peak Hourly Trips	Annual Trips	Peak Monthly Trips	Peak Hourly Trips
2025	103,947	28,571	79	0	0	0	0	0	0
2026	77,438	28,758	80	86,456	24,172	67	90,083	25,079	70
2027	16,625	4,156	12	88,572	29,785	83	84,945	26,157	73

Note: Shading indicates the peak hourly trips for each Alternative.
1. Annual construction trips occur for up to 4 months between June-September.
2. The peak monthly trips occur in the 4th month of construction.
3. The peak hourly trips are calculated based on the peak month of construction activity and assuming the construction trips occur for 12 hours a day for 7 days a week.

As shown in Table 4, although Alternative 1 has the greatest annual number of trips, the peak month activity is estimated to be similar for Alternatives 1 and 2. The peak hourly construction trips is estimated to be approximately 80 for Alternatives 1 and 2. The impacts of construction will be evaluated at the CHRLF study intersections (see Figure 1) for the Opening Year condition during the weekday PM peak hour to identify potential mitigation measures and/or temporary traffic control that may be needed during the construction periods.

We trust this provides you with adequate detail on the CHRLF EIS Alternatives to provide feedback on the transportation analysis methods and assumptions.

Attachment A:
Traffic Volumes in Vicinity of CHRLF

Vehicle Classification Report Summary

Location: 228TH AVE SE N/O 227TH AVE SE

Count Direction: Northbound / Southbound

Date Range: 1/5/2020 to 1/11/2020

Site Code: 01

	FHWA Vehicle Classification													Total
	1	2	3	4	5	6	7	8	9	10	11	12	13	Volume
Study Total														
Northbound	3	702	274	24	292	115	0	2	12	510	0	0	251	2,185
Percent	0.1%	32.1%	12.5%	1.1%	13.4%	5.3%	0.0%	0.1%	0.5%	23.3%	0.0%	0.0%	11.5%	100%
Southbound	2	713	300	30	252	115	0	1	11	743	0	0	14	2,181
Percent	0.1%	32.7%	13.8%	1.4%	11.6%	5.3%	0.0%	0.0%	0.5%	34.1%	0.0%	0.0%	0.6%	100%
Total	5	1,415	574	54	544	230	0	3	23	1,253	0	0	265	4,366
Percent	0.1%	32.4%	13.1%	1.2%	12.5%	5.3%	0.0%	0.1%	0.5%	28.7%	0.0%	0.0%	6.1%	100%

FHWA Vehicle Classification	
Class 1 - Motorcycles	Class 8 - Four or Fewer Axle Single-Trailer Trucks
Class 2 - Passenger Cars	Class 9 - Five-Axle Single-Trailer Trucks
Class 3 - Other Two-Axle, Four-Tire Single Unit Vehicles	Class 10 - Six or More Axle Single-Trailer Trucks
Class 4 - Buses	Class 11 - Five or fewer Axle Multi-Trailer Trucks
Class 5 - Two-Axle, Six-Tire, Single-Unit Trucks	Class 12 - Six-Axle Multi-Trailer Trucks
Class 6 - Three-Axle Single-Unit Trucks	Class 13 - Seven or More Axle Multi-Trailer Trucks
Class 7 - Four or More Axle Single-Unit Trucks	

Mark Skaggs:425-250-0777
mark.skaggs@idaxdata.com

Location: 228TH AVE SE N/O 227TH AVE SE
Date Range: 1/5/2020 to 1/11/2020
Site Code: 01

Sunday, January 5, 2020
Northbound

Time	FHWA Vehicle Classification													Total Volume
	1	2	3	4	5	6	7	8	9	10	11	12	13	
12:00 AM	0	0	0	0	0	0	0	0	0	0	0	0	0	**0**
1:00 AM	0	0	0	0	0	0	0	0	0	0	0	0	0	**0**
2:00 AM	0	0	0	0	0	0	0	0	0	0	0	0	0	**0**
3:00 AM	0	0	0	0	0	0	0	0	0	0	0	0	0	**0**
4:00 AM	0	3	1	0	0	0	0	0	0	0	0	0	0	**4**
5:00 AM	0	22	8	0	4	0	0	0	0	0	0	0	0	**34**
6:00 AM	0	0	2	0	0	1	0	0	0	0	0	0	0	**3**
7:00 AM	0	1	0	0	0	0	0	0	0	5	0	0	1	**7**
8:00 AM	0	0	1	0	1	1	0	0	0	3	0	0	2	**8**
9:00 AM	0	0	0	0	1	0	0	0	0	4	0	0	1	**6**
10:00 AM	0	0	0	0	0	0	0	0	0	5	0	0	2	**7**
11:00 AM	0	1	0	0	0	1	0	0	0	4	0	0	1	**7**
12:00 PM	0	0	1	0	0	0	0	0	0	4	0	0	0	**5**
1:00 PM	0	0	1	0	0	0	0	0	0	0	0	0	0	**1**
2:00 PM	0	0	1	0	0	1	0	0	1	3	0	0	1	**7**
3:00 PM	0	2	0	0	0	0	0	0	0	4	0	0	0	**6**
4:00 PM	0	0	2	0	0	0	0	0	0	0	0	0	0	**2**
5:00 PM	0	0	1	0	1	0	0	0	0	1	0	0	0	**3**
6:00 PM	0	1	0	0	0	0	0	0	0	0	0	0	0	**1**
7:00 PM	0	1	0	0	0	0	0	0	0	0	0	0	0	**1**
8:00 PM	0	0	0	0	0	0	0	0	0	0	0	0	0	**0**
9:00 PM	0	0	0	0	0	0	0	0	0	0	0	0	0	**0**
10:00 PM	0	0	0	0	0	0	0	0	0	0	0	0	0	**0**
11:00 PM	0	0	0	0	0	0	0	0	0	0	0	0	0	**0**
Total	**0**	**31**	**18**	**0**	**7**	**4**	**0**	**0**	**1**	**33**	**0**	**0**	**8**	**102**
Percent	**0.0%**	**30.4%**	**17.6%**	**0.0%**	**6.9%**	**3.9%**	**0.0%**	**0.0%**	**1.0%**	**32.4%**	**0.0%**	**0.0%**	**7.8%**	

Mark Skaggs:425-250-0777
mark.skaggs@idaxdata.com

Location: 228TH AVE SE N/O 227TH AVE SE
Date Range: 1/5/2020 to 1/11/2020
Site Code: 01

Sunday, January 5, 2020
Southbound

Time	FHWA Vehicle Classification													Total Volume
	1	2	3	4	5	6	7	8	9	10	11	12	13	
12:00 AM	0	0	0	0	0	0	0	0	0	0	0	0	0	**0**
1:00 AM	0	0	0	0	0	0	0	0	0	0	0	0	0	**0**
2:00 AM	0	0	0	0	0	0	0	0	0	0	0	0	0	**0**
3:00 AM	0	0	0	0	0	0	0	0	0	0	0	0	0	**0**
4:00 AM	0	0	0	0	0	0	0	0	0	0	0	0	0	**0**
5:00 AM	0	1	1	0	0	0	0	0	0	0	0	0	0	**2**
6:00 AM	0	0	2	0	2	0	0	0	1	9	0	0	1	**15**
7:00 AM	0	1	1	0	1	1	0	0	0	2	0	0	0	**6**
8:00 AM	0	0	0	0	1	1	0	0	0	8	0	0	0	**10**
9:00 AM	0	0	0	0	0	0	0	0	0	3	0	0	0	**3**
10:00 AM	0	0	0	0	0	0	0	0	0	5	0	0	0	**5**
11:00 AM	0	1	1	0	0	1	0	0	0	4	0	0	0	**7**
12:00 PM	0	0	1	0	0	0	0	0	0	0	0	0	0	**1**
1:00 PM	0	1	1	0	0	0	0	0	0	8	0	0	0	**10**
2:00 PM	0	0	2	0	0	1	0	0	0	0	0	0	0	**3**
3:00 PM	0	5	2	0	1	0	0	0	0	1	0	0	0	**9**
4:00 PM	0	17	4	0	2	0	0	0	0	0	0	0	0	**23**
5:00 PM	0	2	1	0	0	0	0	0	0	0	0	0	0	**3**
6:00 PM	0	1	2	0	0	0	0	0	0	0	0	0	0	**3**
7:00 PM	0	2	0	0	0	0	0	0	0	0	0	0	0	**2**
8:00 PM	0	0	0	0	0	0	0	0	0	0	0	0	0	**0**
9:00 PM	0	0	0	0	0	0	0	0	0	0	0	0	0	**0**
10:00 PM	0	0	0	0	0	0	0	0	0	0	0	0	0	**0**
11:00 PM	0	0	0	0	0	0	0	0	0	0	0	0	0	**0**
Total	**0**	**31**	**18**	**0**	**7**	**4**	**0**	**0**	**1**	**40**	**0**	**0**	**1**	**102**
Percent	**0.0%**	**30.4%**	**17.6%**	**0.0%**	**6.9%**	**3.9%**	**0.0%**	**0.0%**	**1.0%**	**39.2%**	**0.0%**	**0.0%**	**1.0%**	

Mark Skaggs:425-250-0777
mark.skaggs@idaxdata.com

Location: 228TH AVE SE N/O 227TH AVE SE
Date Range: 1/5/2020 to 1/11/2020
Site Code: 01

Monday, January 6, 2020
Northbound

Time	FHWA Vehicle Classification													Total Volume
	1	2	3	4	5	6	7	8	9	10	11	12	13	
12:00 AM	0	0	0	0	0	0	0	0	0	0	0	0	0	**0**
1:00 AM	0	0	0	0	0	0	0	0	0	0	0	0	0	**0**
2:00 AM	0	0	0	0	0	0	0	0	0	0	0	0	0	**0**
3:00 AM	0	1	0	0	0	0	0	0	0	0	0	0	0	**1**
4:00 AM	0	2	1	0	1	0	0	0	0	0	0	0	0	**4**
5:00 AM	1	39	16	0	10	0	0	0	0	0	0	0	0	**66**
6:00 AM	0	19	3	0	4	0	0	0	0	1	0	0	0	**27**
7:00 AM	0	16	0	0	2	0	0	0	0	8	0	0	0	**26**
8:00 AM	0	1	3	0	1	1	0	0	0	4	0	0	4	**14**
9:00 AM	0	1	2	0	1	0	0	0	1	8	0	0	4	**17**
10:00 AM	0	3	3	0	1	1	0	0	0	13	0	0	4	**25**
11:00 AM	0	6	1	1	4	3	0	0	1	8	0	0	5	**29**
12:00 PM	0	16	6	0	3	2	0	0	0	9	0	0	8	**44**
1:00 PM	0	12	4	2	3	1	0	0	2	3	0	0	2	**29**
2:00 PM	0	6	4	1	5	1	0	0	0	5	0	0	0	**22**
3:00 PM	0	3	0	0	3	1	0	0	0	15	0	0	7	**29**
4:00 PM	0	0	2	1	0	0	0	0	0	4	0	0	3	**10**
5:00 PM	0	2	1	0	0	0	0	0	0	2	0	0	0	**5**
6:00 PM	0	0	1	0	1	0	0	0	0	5	0	0	2	**9**
7:00 PM	0	1	0	0	1	0	0	0	0	2	0	0	0	**4**
8:00 PM	0	0	0	0	0	0	0	0	0	4	0	0	1	**5**
9:00 PM	0	1	0	0	0	0	0	0	0	0	0	0	0	**1**
10:00 PM	0	0	0	0	4	0	0	0	0	0	0	0	0	**4**
11:00 PM	0	0	0	0	0	0	0	0	0	0	0	0	0	**0**
Total	**1**	**129**	**47**	**5**	**44**	**10**	**0**	**0**	**4**	**91**	**0**	**0**	**40**	**371**
Percent	**0.3%**	**34.8%**	**12.7%**	**1.3%**	**11.9%**	**2.7%**	**0.0%**	**0.0%**	**1.1%**	**24.5%**	**0.0%**	**0.0%**	**10.8%**	

Mark Skaggs:425-250-0777
mark.skaggs@idaxdata.com

Location: 228TH AVE SE N/O 227TH AVE SE
Date Range: 1/5/2020 to 1/11/2020
Site Code: 01

Monday, January 6, 2020
Southbound

Time	FHWA Vehicle Classification													Total Volume
	1	2	3	4	5	6	7	8	9	10	11	12	13	
12:00 AM	0	0	0	0	0	0	0	0	0	0	0	0	0	**0**
1:00 AM	0	0	0	0	0	0	0	0	0	0	0	0	0	**0**
2:00 AM	0	0	0	0	0	0	0	0	0	0	0	0	0	**0**
3:00 AM	0	0	0	0	0	0	0	0	0	0	0	0	0	**0**
4:00 AM	0	0	0	0	0	0	0	0	0	0	0	0	0	**0**
5:00 AM	0	0	1	0	0	0	0	0	0	0	0	0	0	**1**
6:00 AM	0	2	3	1	2	4	0	0	0	19	0	0	0	**31**
7:00 AM	0	2	2	0	1	0	0	0	0	10	0	0	0	**15**
8:00 AM	0	1	3	0	2	1	0	0	0	12	0	0	0	**19**
9:00 AM	0	8	3	0	5	0	0	0	1	8	0	0	1	**26**
10:00 AM	0	2	1	0	0	0	0	0	0	16	0	0	0	**19**
11:00 AM	0	5	2	2	2	3	0	0	0	12	0	0	0	**26**
12:00 PM	0	9	2	0	3	6	0	0	1	4	0	0	0	**25**
1:00 PM	0	9	4	0	1	1	0	0	1	17	0	0	0	**33**
2:00 PM	0	16	5	3	4	0	0	0	0	10	0	0	0	**38**
3:00 PM	0	14	5	1	6	1	0	0	0	10	0	0	0	**37**
4:00 PM	1	29	6	0	6	0	0	0	0	4	0	0	0	**46**
5:00 PM	0	14	3	0	3	0	0	0	0	0	0	0	0	**20**
6:00 PM	0	6	2	0	3	0	0	0	0	0	0	0	0	**11**
7:00 PM	0	3	1	0	0	0	0	0	0	5	0	0	0	**9**
8:00 PM	0	0	0	0	0	0	0	0	0	0	0	0	0	**0**
9:00 PM	0	6	1	0	0	0	0	0	0	0	0	0	0	**7**
10:00 PM	0	2	0	0	0	0	0	0	0	0	0	0	0	**2**
11:00 PM	0	5	2	0	1	0	0	0	0	0	0	0	0	**8**
Total	**1**	**133**	**46**	**7**	**39**	**16**	**0**	**0**	**3**	**127**	**0**	**0**	**1**	**373**
Percent	**0.3%**	**35.7%**	**12.3%**	**1.9%**	**10.5%**	**4.3%**	**0.0%**	**0.0%**	**0.8%**	**34.0%**	**0.0%**	**0.0%**	**0.3%**	

Mark Skaggs:425-250-0777
mark.skaggs@idaxdata.com

Location: 228TH AVE SE N/O 227TH AVE SE
Date Range: 1/5/2020 to 1/11/2020
Site Code: 01

Tuesday, January 7, 2020
Northbound

Time	FHWA Vehicle Classification													Total Volume
	1	2	3	4	5	6	7	8	9	10	11	12	13	
12:00 AM	0	0	0	0	0	0	0	0	0	0	0	0	0	**0**
1:00 AM	0	0	0	0	0	0	0	0	0	0	0	0	0	**0**
2:00 AM	0	0	0	0	0	0	0	0	0	0	0	0	0	**0**
3:00 AM	0	1	0	0	0	0	0	0	0	0	0	0	0	**1**
4:00 AM	0	2	1	0	3	0	0	0	0	0	0	0	0	**6**
5:00 AM	0	42	19	0	10	0	0	0	0	0	0	0	0	**71**
6:00 AM	0	22	2	0	4	0	0	0	0	0	0	0	1	**29**
7:00 AM	0	9	2	0	3	0	0	0	0	8	0	0	1	**23**
8:00 AM	0	6	1	1	3	4	0	0	0	7	0	0	5	**27**
9:00 AM	0	6	1	0	2	1	0	0	0	8	0	0	4	**22**
10:00 AM	0	3	4	2	10	2	0	0	0	9	0	0	7	**37**
11:00 AM	0	2	3	1	3	1	0	1	0	8	0	0	6	**25**
12:00 PM	1	9	7	0	3	3	0	0	1	5	0	0	4	**33**
1:00 PM	0	11	6	1	5	1	0	0	1	4	0	0	5	**34**
2:00 PM	0	6	5	0	1	1	0	0	0	6	0	0	3	**22**
3:00 PM	0	3	1	0	2	1	0	0	0	11	0	0	7	**25**
4:00 PM	0	7	4	0	0	0	0	0	0	5	0	0	3	**19**
5:00 PM	0	1	1	0	0	0	0	0	0	3	0	0	2	**7**
6:00 PM	0	0	0	1	0	0	0	0	0	5	0	0	2	**8**
7:00 PM	0	1	0	0	1	0	0	0	0	0	0	0	0	**2**
8:00 PM	0	0	0	0	0	0	0	0	0	2	0	0	1	**3**
9:00 PM	0	0	0	0	1	0	0	0	0	0	0	0	0	**1**
10:00 PM	0	0	0	0	3	0	0	0	0	0	0	0	0	**3**
11:00 PM	0	0	0	0	0	0	0	0	0	0	0	0	0	**0**
Total	**1**	**131**	**57**	**6**	**54**	**14**	**0**	**1**	**2**	**81**	**0**	**0**	**51**	**398**
Percent	**0.3%**	**32.9%**	**14.3%**	**1.5%**	**13.6%**	**3.5%**	**0.0%**	**0.3%**	**0.5%**	**20.4%**	**0.0%**	**0.0%**	**12.8%**	

Mark Skaggs:425-250-0777
mark.skaggs@idaxdata.com

Location: 228TH AVE SE N/O 227TH AVE SE
Date Range: 1/5/2020 to 1/11/2020
Site Code: 01

Tuesday, January 7, 2020
Southbound

Time	FHWA Vehicle Classification													Total Volume
	1	2	3	4	5	6	7	8	9	10	11	12	13	
12:00 AM	0	0	0	0	0	0	0	0	0	0	0	0	0	**0**
1:00 AM	0	1	0	0	0	0	0	0	0	0	0	0	0	**1**
2:00 AM	0	0	0	0	0	0	0	0	0	0	0	0	0	**0**
3:00 AM	0	0	0	0	0	0	0	0	0	0	0	0	0	**0**
4:00 AM	0	0	0	0	0	0	0	0	0	0	0	0	0	**0**
5:00 AM	0	0	0	0	0	0	0	0	0	0	0	0	0	**0**
6:00 AM	0	2	3	0	4	1	0	0	1	17	0	0	1	**29**
7:00 AM	0	1	8	1	3	1	0	0	0	10	0	0	2	**26**
8:00 AM	0	2	3	1	1	2	0	0	0	13	0	0	0	**22**
9:00 AM	1	4	1	0	4	2	0	0	0	12	0	0	0	**24**
10:00 AM	0	3	3	1	2	3	0	0	0	17	0	0	0	**29**
11:00 AM	0	3	2	1	8	5	0	0	0	8	0	0	0	**27**
12:00 PM	0	5	4	0	3	2	0	0	0	7	0	0	0	**21**
1:00 PM	0	4	1	0	2	2	0	0	0	15	0	0	1	**25**
2:00 PM	0	15	6	1	3	1	0	0	0	17	0	0	0	**43**
3:00 PM	0	14	6	0	4	1	0	0	1	4	0	0	0	**30**
4:00 PM	0	34	11	0	9	0	0	0	0	5	0	0	0	**59**
5:00 PM	0	15	2	0	4	0	0	0	0	0	0	0	0	**21**
6:00 PM	0	10	1	0	2	0	0	0	0	1	0	0	1	**15**
7:00 PM	0	2	2	0	1	0	0	0	0	2	0	0	0	**7**
8:00 PM	0	0	0	0	0	0	0	0	0	0	0	0	0	**0**
9:00 PM	0	5	0	0	0	0	0	0	0	0	0	0	0	**5**
10:00 PM	0	2	1	0	0	0	0	0	0	0	0	0	0	**3**
11:00 PM	0	6	2	0	2	0	0	0	0	0	0	0	0	**10**
Total	**1**	**128**	**56**	**5**	**52**	**20**	**0**	**0**	**2**	**128**	**0**	**0**	**5**	**397**
Percent	**0.3%**	**32.2%**	**14.1%**	**1.3%**	**13.1%**	**5.0%**	**0.0%**	**0.0%**	**0.5%**	**32.2%**	**0.0%**	**0.0%**	**1.3%**	

Mark Skaggs:425-250-0777
mark.skaggs@idaxdata.com

Location: 228TH AVE SE N/O 227TH AVE SE
Date Range: 1/5/2020 to 1/11/2020
Site Code: 01

Wednesday, January 8, 2020
Northbound

Time	FHWA Vehicle Classification													Total Volume
	1	2	3	4	5	6	7	8	9	10	11	12	13	
12:00 AM	0	1	0	0	1	0	0	0	0	0	0	0	0	**2**
1:00 AM	0	0	0	0	0	0	0	0	0	0	0	0	0	**0**
2:00 AM	0	0	0	0	0	0	0	0	0	0	0	0	0	**0**
3:00 AM	0	1	0	0	0	0	0	0	0	0	0	0	0	**1**
4:00 AM	0	5	3	0	1	0	0	0	0	0	0	0	0	**9**
5:00 AM	0	52	13	0	14	0	0	0	0	0	0	0	0	**79**
6:00 AM	0	17	1	0	4	2	0	0	0	1	0	0	0	**25**
7:00 AM	0	11	3	0	1	1	0	0	0	8	0	0	2	**26**
8:00 AM	0	1	2	0	2	2	0	0	0	4	0	0	6	**17**
9:00 AM	0	7	2	0	2	3	0	0	0	9	0	0	7	**30**
10:00 AM	0	6	2	0	3	5	0	0	0	4	0	0	4	**24**
11:00 AM	0	7	4	2	5	5	0	0	0	12	0	0	7	**42**
12:00 PM	1	12	3	0	2	2	0	0	0	9	0	0	4	**33**
1:00 PM	0	10	7	1	1	2	0	0	0	3	0	0	2	**26**
2:00 PM	0	7	5	0	7	1	0	0	0	3	0	0	4	**27**
3:00 PM	0	3	1	0	5	2	0	0	0	17	0	0	3	**31**
4:00 PM	0	3	1	0	2	0	0	0	0	3	0	0	3	**12**
5:00 PM	0	0	3	0	2	0	0	0	0	2	0	0	3	**10**
6:00 PM	0	1	0	0	2	0	0	0	0	4	0	0	0	**7**
7:00 PM	0	0	0	0	1	0	0	0	0	1	0	0	0	**2**
8:00 PM	0	0	0	0	1	0	0	0	0	3	0	0	1	**5**
9:00 PM	0	0	0	0	1	0	0	0	0	0	0	0	0	**1**
10:00 PM	0	1	0	0	3	0	0	0	0	0	0	0	0	**4**
11:00 PM	0	0	0	0	0	0	0	0	0	0	0	0	0	**0**
Total	**1**	**145**	**50**	**3**	**60**	**25**	**0**	**0**	**0**	**83**	**0**	**0**	**46**	**413**
Percent	**0.2%**	**35.1%**	**12.1%**	**0.7%**	**14.5%**	**6.1%**	**0.0%**	**0.0%**	**0.0%**	**20.1%**	**0.0%**	**0.0%**	**11.1%**	

Mark Skaggs:425-250-0777
mark.skaggs@idaxdata.com

Location: 228TH AVE SE N/O 227TH AVE SE
Date Range: 1/5/2020 to 1/11/2020
Site Code: 01

Wednesday, January 8, 2020
Southbound

Time	FHWA Vehicle Classification													Total Volume
	1	2	3	4	5	6	7	8	9	10	11	12	13	
12:00 AM	0	0	1	0	0	0	0	0	0	0	0	0	0	**1**
1:00 AM	0	0	0	0	0	0	0	0	0	0	0	0	0	**0**
2:00 AM	0	0	0	0	0	0	0	0	0	0	0	0	0	**0**
3:00 AM	0	1	0	0	0	0	0	0	0	0	0	0	0	**1**
4:00 AM	0	0	0	0	0	0	0	0	0	0	0	0	0	**0**
5:00 AM	0	1	0	0	0	0	0	0	0	0	0	0	0	**1**
6:00 AM	0	1	3	0	1	3	0	0	0	20	0	0	0	**28**
7:00 AM	0	6	6	0	6	1	0	0	0	8	0	0	0	**27**
8:00 AM	0	0	4	0	2	0	0	0	0	14	0	0	0	**20**
9:00 AM	0	8	5	1	1	0	0	0	0	10	0	0	0	**25**
10:00 AM	0	2	5	0	4	3	0	0	0	16	0	0	0	**30**
11:00 AM	0	3	2	1	0	2	0	0	0	11	0	0	0	**19**
12:00 PM	0	5	8	1	3	4	0	0	0	4	0	0	1	**26**
1:00 PM	0	11	3	0	1	1	0	0	0	20	0	0	0	**36**
2:00 PM	0	17	6	0	2	1	0	0	0	10	0	0	0	**36**
3:00 PM	0	16	3	1	7	2	0	0	0	6	0	0	0	**35**
4:00 PM	0	48	8	0	10	0	0	0	0	2	0	0	0	**68**
5:00 PM	0	6	3	0	4	0	0	0	0	0	0	0	0	**13**
6:00 PM	0	9	2	0	4	0	0	0	0	0	0	0	0	**15**
7:00 PM	0	2	1	0	1	0	0	0	0	4	0	0	0	**8**
8:00 PM	0	0	0	0	0	0	0	0	0	0	0	0	0	**0**
9:00 PM	0	4	0	0	2	0	0	0	0	0	0	0	0	**6**
10:00 PM	0	2	0	0	0	0	0	0	0	0	0	0	0	**2**
11:00 PM	0	6	1	0	3	0	0	0	0	0	0	0	0	**10**
Total	**0**	**148**	**61**	**4**	**51**	**17**	**0**	**0**	**0**	**125**	**0**	**0**	**1**	**407**
Percent	**0.0%**	**36.4%**	**15.0%**	**1.0%**	**12.5%**	**4.2%**	**0.0%**	**0.0%**	**0.0%**	**30.7%**	**0.0%**	**0.0%**	**0.2%**	

Mark Skaggs:425-250-0777
mark.skaggs@idaxdata.com

Location: 228TH AVE SE N/O 227TH AVE SE
Date Range: 1/5/2020 to 1/11/2020
Site Code: 01

Thursday, January 9, 2020
Northbound

Time	FHWA Vehicle Classification													Total Volume
	1	2	3	4	5	6	7	8	9	10	11	12	13	
12:00 AM	0	0	0	0	0	0	0	0	0	0	0	0	0	**0**
1:00 AM	0	0	0	0	0	0	0	0	0	0	0	0	0	**0**
2:00 AM	0	0	0	0	0	0	0	0	0	0	0	0	1	**1**
3:00 AM	0	0	0	0	0	0	0	0	0	0	0	0	0	**0**
4:00 AM	0	3	3	0	2	0	0	0	0	0	0	0	0	**8**
5:00 AM	0	43	13	0	16	0	0	0	0	0	0	0	0	**72**
6:00 AM	0	21	1	0	5	0	0	0	0	1	0	0	0	**28**
7:00 AM	0	7	2	0	2	0	0	0	0	6	0	0	2	**19**
8:00 AM	0	2	0	0	3	1	0	0	0	10	0	0	1	**17**
9:00 AM	0	5	4	1	4	1	0	0	0	11	0	0	4	**30**
10:00 AM	0	1	2	0	5	2	0	0	2	15	0	0	4	**31**
11:00 AM	0	3	5	1	1	5	0	0	0	8	0	0	3	**26**
12:00 PM	0	9	3	1	1	1	0	0	1	13	0	0	6	**35**
1:00 PM	0	8	5	1	4	0	0	0	0	5	0	0	3	**26**
2:00 PM	0	3	5	1	6	0	0	0	0	11	0	0	2	**28**
3:00 PM	0	5	3	1	6	5	0	0	1	9	0	0	5	**35**
4:00 PM	0	4	3	0	1	1	0	0	0	5	0	0	2	**16**
5:00 PM	0	0	1	0	0	0	0	0	0	2	0	0	2	**5**
6:00 PM	0	0	0	0	1	0	0	0	0	0	0	0	3	**4**
7:00 PM	0	0	0	0	1	0	0	0	0	0	0	0	0	**1**
8:00 PM	0	0	0	0	0	0	0	0	0	3	0	0	1	**4**
9:00 PM	0	0	0	0	2	0	0	0	0	0	0	0	0	**2**
10:00 PM	0	0	0	0	3	0	0	0	0	0	0	0	0	**3**
11:00 PM	0	1	0	0	0	0	0	0	0	0	0	0	0	**1**
Total	**0**	**115**	**50**	**6**	**63**	**16**	**0**	**0**	**4**	**99**	**0**	**0**	**39**	**392**
Percent	**0.0%**	**29.3%**	**12.8%**	**1.5%**	**16.1%**	**4.1%**	**0.0%**	**0.0%**	**1.0%**	**25.3%**	**0.0%**	**0.0%**	**9.9%**	

Mark Skaggs:425-250-0777
mark.skaggs@idaxdata.com

Location: 228TH AVE SE N/O 227TH AVE SE
Date Range: 1/5/2020 to 1/11/2020
Site Code: 01

Thursday, January 9, 2020
Southbound

Time	FHWA Vehicle Classification													Total Volume
	1	2	3	4	5	6	7	8	9	10	11	12	13	
12:00 AM	0	0	0	0	0	0	0	0	0	0	0	0	0	**0**
1:00 AM	0	0	0	0	0	0	0	0	0	0	0	0	0	**0**
2:00 AM	0	1	0	0	1	0	0	0	0	0	0	0	0	**2**
3:00 AM	0	0	0	0	0	0	0	0	0	0	0	0	0	**0**
4:00 AM	0	0	0	0	0	0	0	0	0	0	0	0	1	**1**
5:00 AM	0	0	0	0	0	0	0	0	0	0	0	0	0	**0**
6:00 AM	0	2	5	1	3	3	0	0	1	19	0	0	0	**34**
7:00 AM	0	6	5	0	4	0	0	0	1	8	0	0	0	**24**
8:00 AM	0	2	3	0	0	0	0	0	0	14	0	0	0	**19**
9:00 AM	0	3	3	2	4	1	0	0	0	13	0	0	1	**27**
10:00 AM	0	2	2	2	4	1	0	0	1	13	0	0	0	**25**
11:00 AM	0	2	6	1	0	4	0	0	1	13	0	0	1	**28**
12:00 PM	0	5	1	0	0	1	0	0	0	11	0	0	0	**18**
1:00 PM	0	4	0	1	3	1	0	0	0	19	0	0	0	**28**
2:00 PM	0	24	6	2	5	1	0	0	0	11	0	0	1	**50**
3:00 PM	0	13	7	0	8	0	0	0	0	6	0	0	0	**34**
4:00 PM	0	32	11	1	9	0	0	0	0	1	0	0	0	**54**
5:00 PM	0	11	3	0	4	0	0	0	0	0	0	0	0	**18**
6:00 PM	0	5	3	0	0	0	0	0	0	3	0	0	0	**11**
7:00 PM	0	1	0	0	2	0	0	0	0	1	0	0	0	**4**
8:00 PM	0	0	0	0	0	0	0	0	0	0	0	0	0	**0**
9:00 PM	0	4	1	0	0	0	0	0	0	0	0	0	0	**5**
10:00 PM	0	3	0	0	1	0	0	0	0	0	0	0	0	**4**
11:00 PM	0	4	4	0	0	0	0	0	0	0	0	0	0	**8**
Total	**0**	**124**	**60**	**10**	**48**	**12**	**0**	**0**	**4**	**132**	**0**	**0**	**4**	**394**
Percent	**0.0%**	**31.5%**	**15.2%**	**2.5%**	**12.2%**	**3.0%**	**0.0%**	**0.0%**	**1.0%**	**33.5%**	**0.0%**	**0.0%**	**1.0%**	

Mark Skaggs:425-250-0777
mark.skaggs@idaxdata.com

Location: 228TH AVE SE N/O 227TH AVE SE
Date Range: 1/5/2020 to 1/11/2020
Site Code: 01

Friday, January 10, 2020
Northbound

Time	FHWA Vehicle Classification													Total Volume
	1	2	3	4	5	6	7	8	9	10	11	12	13	
12:00 AM	0	0	0	0	0	0	0	0	0	0	0	0	0	**0**
1:00 AM	0	0	0	0	0	0	0	0	0	0	0	0	0	**0**
2:00 AM	0	0	0	0	0	0	0	0	0	0	0	0	0	**0**
3:00 AM	0	0	0	0	1	0	0	0	0	0	0	0	0	**1**
4:00 AM	0	3	0	0	2	0	0	0	0	0	0	0	0	**5**
5:00 AM	0	42	9	0	9	0	0	0	0	0	0	0	0	**60**
6:00 AM	0	19	3	0	4	0	0	0	0	1	0	0	0	**27**
7:00 AM	0	10	2	0	1	1	0	0	0	12	0	0	2	**28**
8:00 AM	0	7	1	0	2	0	0	0	0	3	0	0	5	**18**
9:00 AM	0	3	1	1	3	2	0	1	0	13	0	0	5	**29**
10:00 AM	0	3	4	1	3	1	0	0	0	5	0	0	7	**24**
11:00 AM	0	2	6	0	0	1	0	0	0	11	0	0	5	**25**
12:00 PM	0	10	4	2	2	4	0	0	0	6	0	0	5	**33**
1:00 PM	0	7	2	0	5	1	0	0	0	6	0	0	3	**24**
2:00 PM	0	5	5	0	5	1	0	0	0	7	0	0	1	**24**
3:00 PM	0	1	1	0	3	0	0	0	0	14	0	0	6	**25**
4:00 PM	0	1	0	0	0	0	0	0	0	1	0	0	1	**3**
5:00 PM	0	1	1	0	1	0	0	0	0	4	0	0	2	**9**
6:00 PM	0	1	0	0	0	0	0	0	0	2	0	0	2	**5**
7:00 PM	0	1	0	0	2	0	0	0	0	1	0	0	0	**4**
8:00 PM	0	0	1	0	0	0	0	0	0	2	0	0	2	**5**
9:00 PM	0	0	0	0	2	0	0	0	0	0	0	0	0	**2**
10:00 PM	0	1	0	0	2	0	0	0	0	0	0	0	0	**3**
11:00 PM	0	0	0	0	0	0	0	0	0	0	0	0	0	**0**
Total	**0**	**117**	**40**	**4**	**47**	**11**	**0**	**1**	**0**	**88**	**0**	**0**	**46**	**354**
Percent	**0.0%**	**33.1%**	**11.3%**	**1.1%**	**13.3%**	**3.1%**	**0.0%**	**0.3%**	**0.0%**	**24.9%**	**0.0%**	**0.0%**	**13.0%**	

Mark Skaggs:425-250-0777
mark.skaggs@idaxdata.com

Location: 228TH AVE SE N/O 227TH AVE SE
Date Range: 1/5/2020 to 1/11/2020
Site Code: 01

Friday, January 10, 2020
Southbound

Time	FHWA Vehicle Classification													Total Volume
	1	2	3	4	5	6	7	8	9	10	11	12	13	
12:00 AM	0	0	0	0	0	0	0	0	0	0	0	0	0	**0**
1:00 AM	0	0	0	0	0	0	0	0	0	0	0	0	0	**0**
2:00 AM	0	0	0	0	0	0	0	0	0	0	0	0	0	**0**
3:00 AM	0	1	0	0	0	0	0	0	0	0	0	0	0	**1**
4:00 AM	0	0	0	0	0	0	0	0	0	0	0	0	0	**0**
5:00 AM	0	0	1	0	0	0	0	0	0	0	0	0	0	**1**
6:00 AM	0	2	4	0	3	0	0	0	0	21	0	0	1	**31**
7:00 AM	0	1	4	1	3	2	0	0	0	11	0	0	0	**22**
8:00 AM	0	1	1	0	3	0	0	0	0	15	0	0	0	**20**
9:00 AM	0	0	3	0	2	1	0	0	0	14	0	0	0	**20**
10:00 AM	0	3	3	1	2	1	0	1	0	14	0	0	0	**25**
11:00 AM	0	4	4	0	0	1	0	0	0	10	0	0	0	**19**
12:00 PM	0	7	2	1	4	3	0	0	0	10	0	0	0	**27**
1:00 PM	0	5	3	1	1	1	0	0	0	19	0	0	0	**30**
2:00 PM	0	10	6	0	4	1	0	0	0	10	0	0	0	**31**
3:00 PM	0	14	4	0	6	0	0	0	0	4	0	0	0	**28**
4:00 PM	0	35	5	0	7	0	0	0	0	3	0	0	0	**50**
5:00 PM	0	8	0	0	0	0	0	0	0	0	0	0	0	**8**
6:00 PM	0	7	2	0	3	0	0	0	0	0	0	0	0	**12**
7:00 PM	0	5	0	0	0	0	0	0	0	4	0	0	0	**9**
8:00 PM	0	1	1	0	0	0	0	0	0	0	0	0	0	**2**
9:00 PM	0	3	0	0	1	0	0	0	0	0	0	0	0	**4**
10:00 PM	0	0	2	0	0	0	0	0	0	0	0	0	0	**2**
11:00 PM	0	5	3	0	1	0	0	0	0	0	0	0	0	**9**
Total	**0**	**112**	**48**	**4**	**40**	**10**	**0**	**1**	**0**	**135**	**0**	**0**	**1**	**351**
Percent	**0.0%**	**31.9%**	**13.7%**	**1.1%**	**11.4%**	**2.8%**	**0.0%**	**0.3%**	**0.0%**	**38.5%**	**0.0%**	**0.0%**	**0.3%**	

Mark Skaggs:425-250-0777
mark.skaggs@idaxdata.com

Location: 228TH AVE SE N/O 227TH AVE SE
Date Range: 1/5/2020 to 1/11/2020
Site Code: 01

Saturday, January 11, 2020
Northbound

Time	FHWA Vehicle Classification													Total Volume
	1	2	3	4	5	6	7	8	9	10	11	12	13	
12:00 AM	0	0	0	0	0	0	0	0	0	0	0	0	0	**0**
1:00 AM	0	0	0	0	0	0	0	0	0	0	0	0	0	**0**
2:00 AM	0	0	0	0	0	0	0	0	0	0	0	0	0	**0**
3:00 AM	0	0	0	0	1	0	0	0	0	0	0	0	0	**1**
4:00 AM	0	1	0	0	1	0	0	0	0	0	0	0	0	**2**
5:00 AM	0	24	3	0	6	0	0	0	0	0	0	0	0	**33**
6:00 AM	0	1	0	0	0	0	0	0	0	0	0	0	0	**1**
7:00 AM	0	0	1	0	1	5	0	0	0	3	0	0	3	**13**
8:00 AM	0	0	0	0	0	4	0	0	0	3	0	0	2	**9**
9:00 AM	0	0	0	0	0	4	0	0	0	5	0	0	1	**10**
10:00 AM	0	0	0	0	0	4	0	0	0	4	0	0	2	**10**
11:00 AM	0	1	0	0	0	2	0	0	0	3	0	0	3	**9**
12:00 PM	0	1	0	0	2	6	0	0	0	6	0	0	0	**15**
1:00 PM	0	2	1	0	0	3	0	0	0	2	0	0	3	**11**
2:00 PM	0	0	1	0	0	5	0	0	1	4	0	0	1	**12**
3:00 PM	0	1	3	0	3	1	0	0	0	3	0	0	5	**16**
4:00 PM	0	1	1	0	2	0	0	0	0	0	0	0	0	**4**
5:00 PM	0	1	1	0	0	1	0	0	0	2	0	0	1	**6**
6:00 PM	0	0	0	0	0	0	0	0	0	0	0	0	0	**0**
7:00 PM	0	0	0	0	1	0	0	0	0	0	0	0	0	**1**
8:00 PM	0	1	1	0	0	0	0	0	0	0	0	0	0	**2**
9:00 PM	0	0	0	0	0	0	0	0	0	0	0	0	0	**0**
10:00 PM	0	0	0	0	0	0	0	0	0	0	0	0	0	**0**
11:00 PM	0	0	0	0	0	0	0	0	0	0	0	0	0	**0**
Total	**0**	**34**	**12**	**0**	**17**	**35**	**0**	**0**	**1**	**35**	**0**	**0**	**21**	**155**
Percent	**0.0%**	**21.9%**	**7.7%**	**0.0%**	**11.0%**	**22.6%**	**0.0%**	**0.0%**	**0.6%**	**22.6%**	**0.0%**	**0.0%**	**13.5%**	

Mark Skaggs:425-250-0777
mark.skaggs@idaxdata.com

Location: 228TH AVE SE N/O 227TH AVE SE
Date Range: 1/5/2020 to 1/11/2020
Site Code: 01

Saturday, January 11, 2020
Southbound

Time	FHWA Vehicle Classification													Total Volume
	1	2	3	4	5	6	7	8	9	10	11	12	13	
12:00 AM	0	1	0	0	0	0	0	0	0	0	0	0	0	**1**
1:00 AM	0	0	0	0	0	0	0	0	0	0	0	0	0	**0**
2:00 AM	0	0	0	0	0	0	0	0	0	0	0	0	0	**0**
3:00 AM	0	0	0	0	0	0	0	0	0	0	0	0	0	**0**
4:00 AM	0	0	0	0	0	0	0	0	0	0	0	0	0	**0**
5:00 AM	0	1	0	0	0	0	0	0	0	0	0	0	0	**1**
6:00 AM	0	0	1	0	1	0	0	0	1	12	0	0	0	**15**
7:00 AM	0	0	0	0	2	6	0	0	0	2	0	0	0	**10**
8:00 AM	0	0	0	0	0	4	0	0	0	8	0	0	0	**12**
9:00 AM	0	0	0	0	0	4	0	0	0	4	0	0	0	**8**
10:00 AM	0	0	0	0	1	4	0	0	0	9	0	0	0	**14**
11:00 AM	0	2	0	0	1	2	0	0	0	3	0	0	0	**8**
12:00 PM	0	0	0	0	1	4	0	0	0	5	0	0	1	**11**
1:00 PM	0	2	0	0	0	4	0	0	0	4	0	0	0	**10**
2:00 PM	0	0	2	0	1	5	0	0	0	5	0	0	0	**13**
3:00 PM	0	5	1	0	1	3	0	0	0	4	0	0	0	**14**
4:00 PM	0	20	5	0	5	0	0	0	0	0	0	0	0	**30**
5:00 PM	0	1	1	0	2	0	0	0	0	0	0	0	0	**4**
6:00 PM	0	3	0	0	0	0	0	0	0	0	0	0	0	**3**
7:00 PM	0	1	0	0	0	0	0	0	0	0	0	0	0	**1**
8:00 PM	0	0	1	0	0	0	0	0	0	0	0	0	0	**1**
9:00 PM	0	1	0	0	0	0	0	0	0	0	0	0	0	**1**
10:00 PM	0	0	0	0	0	0	0	0	0	0	0	0	0	**0**
11:00 PM	0	0	0	0	0	0	0	0	0	0	0	0	0	**0**
Total	**0**	**37**	**11**	**0**	**15**	**36**	**0**	**0**	**1**	**56**	**0**	**0**	**1**	**157**
Percent	**0.0%**	**23.6%**	**7.0%**	**0.0%**	**9.6%**	**22.9%**	**0.0%**	**0.0%**	**0.6%**	**35.7%**	**0.0%**	**0.0%**	**0.6%**	

Mark Skaggs:425-250-0777
mark.skaggs@idaxdata.com

Location: 228TH AVE SE N/O 227TH AVE SE
Date Range: 1/5/2020 to 1/11/2020
Site Code: 01

Total Study Average
Northbound

Time	FHWA Vehicle Classification													Total Volume
	1	2	3	4	5	6	7	8	9	10	11	12	13	
12:00 AM	0	0	0	0	0	0	0	0	0	0	0	0	0	**0**
1:00 AM	0	0	0	0	0	0	0	0	0	0	0	0	0	**0**
2:00 AM	0	0	0	0	0	0	0	0	0	0	0	0	0	**0**
3:00 AM	0	0	0	0	0	0	0	0	0	0	0	0	0	**0**
4:00 AM	0	3	1	0	1	0	0	0	0	0	0	0	0	**5**
5:00 AM	0	38	12	0	10	0	0	0	0	0	0	0	0	**60**
6:00 AM	0	14	2	0	3	0	0	0	0	1	0	0	0	**20**
7:00 AM	0	8	1	0	1	1	0	0	0	7	0	0	2	**20**
8:00 AM	0	2	1	0	2	2	0	0	0	5	0	0	4	**16**
9:00 AM	0	3	1	0	2	2	0	0	0	8	0	0	4	**20**
10:00 AM	0	2	2	0	3	2	0	0	0	8	0	0	4	**21**
11:00 AM	0	3	3	1	2	3	0	0	0	8	0	0	4	**24**
12:00 PM	0	8	3	0	2	3	0	0	0	7	0	0	4	**27**
1:00 PM	0	7	4	1	3	1	0	0	0	3	0	0	3	**22**
2:00 PM	0	4	4	0	3	1	0	0	0	6	0	0	2	**20**
3:00 PM	0	3	1	0	3	1	0	0	0	10	0	0	5	**23**
4:00 PM	0	2	2	0	1	0	0	0	0	3	0	0	2	**10**
5:00 PM	0	1	1	0	1	0	0	0	0	2	0	0	1	**6**
6:00 PM	0	0	0	0	1	0	0	0	0	2	0	0	1	**4**
7:00 PM	0	1	0	0	1	0	0	0	0	1	0	0	0	**3**
8:00 PM	0	0	0	0	0	0	0	0	0	2	0	0	1	**3**
9:00 PM	0	0	0	0	1	0	0	0	0	0	0	0	0	**1**
10:00 PM	0	0	0	0	2	0	0	0	0	0	0	0	0	**2**
11:00 PM	0	0	0	0	0	0	0	0	0	0	0	0	0	**0**
Total	**0**	**99**	**38**	**2**	**42**	**16**	**0**	**0**	**0**	**73**	**0**	**0**	**37**	**307**
Percent	**0.0%**	**32.2%**	**12.4%**	**0.7%**	**13.7%**	**5.2%**	**0.0%**	**0.0%**	**0.0%**	**23.8%**	**0.0%**	**0.0%**	**12.1%**	

Note: Average only condsidered on days with 24-hours of data.

Mark Skaggs:425-250-0777
mark.skaggs@idaxdata.com

Location: 228TH AVE SE N/O 227TH AVE SE
Date Range: 1/5/2020 to 1/11/2020
Site Code: 01

Total Study Average
Southbound

Time	FHWA Vehicle Classification													Total Volume
	1	2	3	4	5	6	7	8	9	10	11	12	13	
12:00 AM	0	0	0	0	0	0	0	0	0	0	0	0	0	**0**
1:00 AM	0	0	0	0	0	0	0	0	0	0	0	0	0	**0**
2:00 AM	0	0	0	0	0	0	0	0	0	0	0	0	0	**0**
3:00 AM	0	0	0	0	0	0	0	0	0	0	0	0	0	**0**
4:00 AM	0	0	0	0	0	0	0	0	0	0	0	0	0	**0**
5:00 AM	0	0	0	0	0	0	0	0	0	0	0	0	0	**0**
6:00 AM	0	1	3	0	2	2	0	0	1	17	0	0	0	**26**
7:00 AM	0	2	4	0	3	2	0	0	0	7	0	0	0	**18**
8:00 AM	0	1	2	0	1	1	0	0	0	12	0	0	0	**17**
9:00 AM	0	3	2	0	2	1	0	0	0	9	0	0	0	**17**
10:00 AM	0	2	2	1	2	2	0	0	0	13	0	0	0	**22**
11:00 AM	0	3	2	1	2	3	0	0	0	9	0	0	0	**20**
12:00 PM	0	4	3	0	2	3	0	0	0	6	0	0	0	**18**
1:00 PM	0	5	2	0	1	1	0	0	0	15	0	0	0	**24**
2:00 PM	0	12	5	1	3	1	0	0	0	9	0	0	0	**31**
3:00 PM	0	12	4	0	5	1	0	0	0	5	0	0	0	**27**
4:00 PM	0	31	7	0	7	0	0	0	0	2	0	0	0	**47**
5:00 PM	0	8	2	0	2	0	0	0	0	0	0	0	0	**12**
6:00 PM	0	6	2	0	2	0	0	0	0	1	0	0	0	**11**
7:00 PM	0	2	1	0	1	0	0	0	0	2	0	0	0	**6**
8:00 PM	0	0	0	0	0	0	0	0	0	0	0	0	0	**0**
9:00 PM	0	3	0	0	0	0	0	0	0	0	0	0	0	**3**
10:00 PM	0	1	0	0	0	0	0	0	0	0	0	0	0	**1**
11:00 PM	0	4	2	0	1	0	0	0	0	0	0	0	0	**7**
Total	**0**	**100**	**43**	**3**	**36**	**17**	**0**	**0**	**1**	**107**	**0**	**0**	**0**	**307**
Percent	**0.0%**	**32.6%**	**14.0%**	**1.0%**	**11.7%**	**5.5%**	**0.0%**	**0.0%**	**0.3%**	**34.9%**	**0.0%**	**0.0%**	**0.0%**	

Note: Average only condsidered on days with 24-hours of data.

Mark Skaggs:425-250-0777
mark.skaggs@idaxdata.com

Location: 228TH AVE SE N/O 227TH AVE SE
Date Range: 1/5/2020 to 1/11/2020
Site Code: 01

3-Day (Tuesday - Thursday) Average
Northbound

Time	FHWA Vehicle Classification													Total Volume
	1	2	3	4	5	6	7	8	9	10	11	12	13	
12:00 AM	0	0	0	0	0	0	0	0	0	0	0	0	0	**0**
1:00 AM	0	0	0	0	0	0	0	0	0	0	0	0	0	**0**
2:00 AM	0	0	0	0	0	0	0	0	0	0	0	0	0	**0**
3:00 AM	0	1	0	0	0	0	0	0	0	0	0	0	0	**1**
4:00 AM	0	3	2	0	2	0	0	0	0	0	0	0	0	**7**
5:00 AM	0	46	15	0	13	0	0	0	0	0	0	0	0	**74**
6:00 AM	0	20	1	0	4	1	0	0	0	1	0	0	0	**27**
7:00 AM	0	9	2	0	2	0	0	0	0	7	0	0	2	**22**
8:00 AM	0	3	1	0	3	2	0	0	0	7	0	0	4	**20**
9:00 AM	0	6	2	0	3	2	0	0	0	9	0	0	5	**27**
10:00 AM	0	3	3	1	6	3	0	0	1	9	0	0	5	**31**
11:00 AM	0	4	4	1	3	4	0	0	0	9	0	0	5	**30**
12:00 PM	1	10	4	0	2	2	0	0	1	9	0	0	5	**34**
1:00 PM	0	10	6	1	3	1	0	0	0	4	0	0	3	**28**
2:00 PM	0	5	5	0	5	1	0	0	0	7	0	0	3	**26**
3:00 PM	0	4	2	0	4	3	0	0	0	12	0	0	5	**30**
4:00 PM	0	5	3	0	1	0	0	0	0	4	0	0	3	**16**
5:00 PM	0	0	2	0	1	0	0	0	0	2	0	0	2	**7**
6:00 PM	0	0	0	0	1	0	0	0	0	3	0	0	2	**6**
7:00 PM	0	0	0	0	1	0	0	0	0	0	0	0	0	**1**
8:00 PM	0	0	0	0	0	0	0	0	0	3	0	0	1	**4**
9:00 PM	0	0	0	0	1	0	0	0	0	0	0	0	0	**1**
10:00 PM	0	0	0	0	3	0	0	0	0	0	0	0	0	**3**
11:00 PM	0	0	0	0	0	0	0	0	0	0	0	0	0	**0**
Total	**1**	**129**	**52**	**3**	**58**	**19**	**0**	**0**	**2**	**86**	**0**	**0**	**45**	**395**
Percent	**0.3%**	**32.7%**	**13.2%**	**0.8%**	**14.7%**	**4.8%**	**0.0%**	**0.0%**	**0.5%**	**21.8%**	**0.0%**	**0.0%**	**11.4%**	

Mark Skaggs:425-250-0777
mark.skaggs@idaxdata.com

Location: 228TH AVE SE N/O 227TH AVE SE
Date Range: 1/5/2020 to 1/11/2020
Site Code: 01

3-Day (Tuesday - Thursday) Average
Southbound

Time	FHWA Vehicle Classification													Total Volume
	1	2	3	4	5	6	7	8	9	10	11	12	13	
12:00 AM	0	0	0	0	0	0	0	0	0	0	0	0	0	**0**
1:00 AM	0	0	0	0	0	0	0	0	0	0	0	0	0	**0**
2:00 AM	0	0	0	0	0	0	0	0	0	0	0	0	0	**0**
3:00 AM	0	0	0	0	0	0	0	0	0	0	0	0	0	**0**
4:00 AM	0	0	0	0	0	0	0	0	0	0	0	0	0	**0**
5:00 AM	0	0	0	0	0	0	0	0	0	0	0	0	0	**0**
6:00 AM	0	2	4	0	3	2	0	0	1	19	0	0	0	**31**
7:00 AM	0	4	6	0	4	1	0	0	0	9	0	0	1	**25**
8:00 AM	0	1	3	0	1	1	0	0	0	14	0	0	0	**20**
9:00 AM	0	5	3	1	3	1	0	0	0	12	0	0	0	**25**
10:00 AM	0	2	3	1	3	2	0	0	0	15	0	0	0	**26**
11:00 AM	0	3	3	1	3	4	0	0	0	11	0	0	0	**25**
12:00 PM	0	5	4	0	2	2	0	0	0	7	0	0	0	**20**
1:00 PM	0	6	1	0	2	1	0	0	0	18	0	0	0	**28**
2:00 PM	0	19	6	1	3	1	0	0	0	13	0	0	0	**43**
3:00 PM	0	14	5	0	6	1	0	0	0	5	0	0	0	**31**
4:00 PM	0	38	10	0	9	0	0	0	0	3	0	0	0	**60**
5:00 PM	0	11	3	0	4	0	0	0	0	0	0	0	0	**18**
6:00 PM	0	8	2	0	2	0	0	0	0	1	0	0	0	**13**
7:00 PM	0	2	1	0	1	0	0	0	0	2	0	0	0	**6**
8:00 PM	0	0	0	0	0	0	0	0	0	0	0	0	0	**0**
9:00 PM	0	4	0	0	1	0	0	0	0	0	0	0	0	**5**
10:00 PM	0	2	0	0	0	0	0	0	0	0	0	0	0	**2**
11:00 PM	0	5	2	0	2	0	0	0	0	0	0	0	0	**9**
Total	**0**	**131**	**56**	**4**	**49**	**16**	**0**	**0**	**1**	**129**	**0**	**0**	**1**	**387**
Percent	**0.0%**	**33.9%**	**14.5%**	**1.0%**	**12.7%**	**4.1%**	**0.0%**	**0.0%**	**0.3%**	**33.3%**	**0.0%**	**0.0%**	**0.3%**	

Mark Skaggs:425-250-0777
mark.skaggs@idaxdata.com

Appendix A: Methods and Assumptions

Attachment A: Traffic Volumes

Location: 228TH AVE SE N/O 227TH AVE SE
Date Range: 1/5/2020 - 1/11/2020
Site Code: 01

	Sunday			Monday			Tuesday			Wednesday			Thursday			Friday			Saturday					
	1/5/2020			1/6/2020			1/7/2020			1/8/2020			1/9/2020			1/10/2020			1/11/2020			Mid-Week Average		
Time	NB	SB	Total	NB	SB	Total	NB	SB	Total	NB	SB	Total	NB	SB	Total	NB	SB	Total	NB	SB	Total	NB	SB	Total
12:00 AM	0	0	0	0	0	0	0	0	0	2	1	3	0	0	0	0	0	0	0	1	1	1	0	1
1:00 AM	0	0	0	0	0	0	0	1	1	0	0	0	0	0	0	0	0	0	0	0	0	0	0	0
2:00 AM	0	0	0	0	0	0	0	0	0	0	0	0	1	2	3	0	0	0	0	0	0	0	1	1
3:00 AM	0	0	0	1	0	1	1	0	1	1	1	2	0	0	0	1	1	2	1	0	1	1	0	1
4:00 AM	4	0	4	4	0	4	6	0	6	9	0	9	8	1	9	5	0	5	2	0	2	8	0	8
5:00 AM	34	2	36	66	1	67	71	0	71	79	1	80	72	0	72	60	1	61	33	1	34	74	0	74
6:00 AM	3	15	18	27	31	58	29	29	58	25	28	53	28	34	62	27	31	58	1	15	16	27	30	58
7:00 AM	7	6	13	26	15	41	23	26	49	26	27	53	19	24	43	28	22	50	13	10	23	23	26	48
8:00 AM	8	10	18	14	19	33	27	22	49	17	20	37	17	19	36	18	20	38	9	12	21	20	20	41
9:00 AM	6	3	9	17	26	43	22	24	46	30	25	55	30	27	57	29	20	49	10	8	18	27	25	53
10:00 AM	7	5	12	25	19	44	37	29	66	24	30	54	31	25	56	24	25	49	10	14	24	31	28	59
11:00 AM	7	7	14	29	26	55	25	27	52	42	19	61	26	28	54	25	19	44	9	8	17	31	25	56
12:00 PM	5	1	6	44	25	69	33	21	54	33	26	59	35	18	53	33	27	60	15	11	26	34	22	55
1:00 PM	1	10	11	29	33	62	34	25	59	26	36	62	26	28	54	24	30	54	11	10	21	29	30	58
2:00 PM	7	3	10	22	38	60	22	43	65	27	36	63	28	50	78	24	31	55	12	13	25	26	43	69
3:00 PM	6	9	15	29	37	66	25	30	55	31	35	66	35	34	69	25	28	53	16	14	30	30	33	63
4:00 PM	2	23	25	10	46	56	19	59	78	12	68	80	16	54	70	3	50	53	4	30	34	16	60	76
5:00 PM	3	3	6	5	20	25	7	21	28	10	13	23	5	18	23	9	8	17	6	4	10	7	17	25
6:00 PM	1	3	4	9	11	20	8	15	23	7	15	22	4	11	15	5	12	17	0	3	3	6	14	20
7:00 PM	1	2	3	4	9	13	2	7	9	2	8	10	1	4	5	4	9	13	1	1	2	2	6	8
8:00 PM	0	0	0	5	0	5	3	0	3	5	0	5	4	0	4	5	2	7	2	1	3	4	0	4
9:00 PM	0	0	0	1	7	8	1	5	6	1	6	7	2	5	7	2	4	6	0	1	1	1	5	7
10:00 PM	0	0	0	4	2	6	3	3	6	4	2	6	3	4	7	3	2	5	0	0	0	3	3	6
11:00 PM	0	0	0	0	8	8	0	10	10	0	10	10	1	8	9	0	9	9	0	0	0	0	9	10
Total	**102**	**102**	**204**	**371**	**373**	**744**	**398**	**397**	**795**	**413**	**407**	**820**	**392**	**394**	**786**	**354**	**351**	**705**	**155**	**157**	**312**	**401**	**399**	**800**
Percent	**50%**	**50%**	-	**50%**	**50%**	-	**50%**	**50%**	-	**50%**	**50%**	-	**50%**	**50%**	-	**50%**	**50%**	-	**50%**	**50%**	-	**50%**	**50%**	-

1. Mid-week average includes data between Tuesday and Thursday.

Mark Skaggs:425-250-0777
mark.skaggs@idaxdata.com

Attachment B:
Detailed Trip Generation

Attachment C:
Project Trip Distributions

Attachment D:
LOS Operations Assumptions

Attachment D: LOS Operations Assumptions

Check Items	Scenario	
	Existing Conditions	Future Conditions
Roadway Network	Roadway network drawn to scale. Link speeds based on posted speed limit.	Same as existing plus planned improvements including funded projects as shown in the travel demand model, funded projects in the adopted TIPs, and/or projects that King County or other local agencies identify as committed for inclusion in the analysis.
Channelization	1. Lane configurations checked against an aerial and field notes. 2. Pocket lengths entered for all exclusive turn lanes. 3. Right-turn treatment (none, yield, free, etc.) identified. 4. Right turns on red allowed verified.	Same as existing plus planned improvements, as described above.
Volumes	1. Balanced where appropriate (e.g., closely spaced intersections with no driveways between them).	1. Check to see that the baseline volumes are greater than existing, as appropriate. Document if decreases in volumes are appropriate.
Factors	1. **Truck percent** by approach based on counts or if not available in higher truck activity areas based on WSDOT or other historical data. 2. **PHF** based on counts for intersection as a whole.	1. Truck percentage assume 2 percent at new intersections. 2. Calculate future truck percentages based on future forecasts and trip generation to account for trucks in forecasts. 3. PHF per NCHRP Report 599, Table 19, or based on existing if higher than NCHRP.
Signal Timing	Signal timing based on timing sheets from agency. If these are not available use field observations to understand phasing. Parameters that should be entered include: 1. Controller type 2. Cycle Length 3. Phasing 4. Min greens, total splits, yellow, and red 5. Lead/Lag Phasing Optimization off 6. Recall mode (Typically **Min** for major street and **None** for Minor) 7. Pedestrian phases, walk and don't walk times 8. "Reference to" beginning of green or as noted on timing sheet.	If new signal or timing is not available, **use agency standards**. If there are no standards, assume: 1. Minimum Initial = 4 sec for side/minor streets and 8 sec for main/major street 2. Cycle Length = 60 sec or greater 3. Phasing = Use minimum cross-product estimation method (Chapter 31, 2010 HCM, Exhibit 31-38) see attached. 4. Yellow = 4 sec 5. Red = 1 sec 6. Lead/Lag Phasing Optimization off 7. Recall mode: Min for major street and None for Minor 8. Pedestrian phases: Walk = 7 sec and Don't Walk = 3.5 feet per sec 9. "Reference to" beginning of green For existing and future traffic signals: 1. Maintain coordinated corridors 2. Optimize phase splits at signalized intersections. If LOS or V/C ratio is poor, consider changing the cycle length.
Pedestrian	Code in volumes based on counts. For study intersections with no data available use the Synchro manual guide (e.g., if more than one ped call is anticipated per hour consider coding 5 ped calls.)	Remain the same as existing.

Appendix B. LOS Definitions

Highway Capacity Manual 2010/6th Edition

Signalized intersection level of service (LOS) is defined in terms of a weighted average control delay for the entire intersection. Control delay quantifies the increase in travel time that a vehicle experiences due to the traffic signal control as well as provides a surrogate measure for driver discomfort and fuel consumption. Signalized intersection LOS is stated in terms of average control delay per vehicle (in seconds) during a specified time period (e.g., weekday PM peak hour). Control delay is a complex measure based on many variables, including signal phasing and coordination (i.e., progression of movements through the intersection and along the corridor), signal cycle length, and traffic volumes with respect to intersection capacity and resulting queues. Table 1 summarizes the LOS criteria for signalized intersections, as described in the *Highway Capacity Manual 2010* and 6th Edition (Transportation Research Board, 2010 and 2016, respectively).

Table 1. Level of Service Criteria for Signalized Intersections

Level of Service	Average Control Delay (seconds/vehicle)	General Description
A	≤10	Free Flow
B	>10 – 20	Stable Flow (slight delays)
C	>20 – 35	Stable flow (acceptable delays)
D	>35 – 55	Approaching unstable flow (tolerable delay, occasionally wait through more than one signal cycle before proceeding)
E	>55 – 80	Unstable flow (intolerable delay)
F[1]	>80	Forced flow (congested and queues fail to clear)

Source: *Highway Capacity Manual 2010 and 6th Edition*, Transportation Research Board, 2010 and 2016, respectively.

1. If the volume-to-capacity (v/c) ratio for a lane group exceeds 1.0 LOS F is assigned to the individual lane group. LOS for overall approach or intersection is determined solely by the control delay.

Unsignalized intersection LOS criteria can be further reduced into two intersection types: all-way stop and two-way stop control. All-way stop control intersection LOS is expressed in terms of the weighted average control delay of the overall intersection or by approach. Two-way stop-controlled intersection LOS is defined in terms of the average control delay for each minor-street movement (or shared movement) as well as major-street left-turns. This approach is because major-street through vehicles are assumed to experience zero delay, a weighted average of all movements results in very low overall average delay, and this calculated low delay could mask deficiencies of minor movements. Table 2 shows LOS criteria for unsignalized intersections.

Table 2. Level of Service Criteria for Unsignalized Intersections

Level of Service	Average Control Delay (seconds/vehicle)
A	0 – 10
B	>10 – 15
C	>15 – 25
D	>25 – 35
E	>35 – 50
F[1]	>50

Source: *Highway Capacity Manual 2010 and 6th Edition*, Transportation Research Board, 2010 and 2016, respectively.

1. If the volume-to-capacity (v/c) ratio exceeds 1.0, LOS F is assigned an individual lane group for all unsignalized intersections, or minor street approach at two-way stop-controlled intersections. Overall intersection LOS is determined solely by control delay.

Highway Capacity Manual, 2000

Signalized intersection level of service (LOS) is defined in terms of the average total vehicle delay of all movements through an intersection. Vehicle delay is a method of quantifying several intangible factors, including driver discomfort, frustration, and lost travel time. Specifically, LOS criteria are stated in terms of average delay per vehicle during a specified time period (for example, the PM peak hour). Vehicle delay is a complex measure based on many variables, including signal phasing (i.e., progression of movements through the intersection), signal cycle length, and traffic volumes with respect to intersection capacity. Table 1 shows LOS criteria for signalized intersections, as described in the *Highway Capacity Manual* (Transportation Research Board, Special Report 209, 2000).

Table 1. Level of Service Criteria for Signalized Intersections

Level of Service	Average Control Delay (sec/veh)	General Description (Signalized Intersections)
A	≤10	Free Flow
B	>10 - 20	Stable Flow (slight delays)
C	>20 - 35	Stable flow (acceptable delays)
D	>35 - 55	Approaching unstable flow (tolerable delay, occasionally wait through more than one signal cycle before proceeding)
E	>55 - 80	Unstable flow (intolerable delay)
F	>80	Forced flow (jammed)

Source: *Highway Capacity Manual*, Transportation Research Board, Special Report 209, 2000.

Unsignalized intersection LOS criteria can be further reduced into two intersection types: all-way stop-controlled and two-way stop-controlled. All-way, stop-controlled intersection LOS is expressed in terms of the average vehicle delay of all of the movements, much like that of a signalized intersection. Two-way, stop-controlled intersection LOS is defined in terms of the average vehicle delay of an individual movement(s). This is because the performance of a two-way, stop-controlled intersection is more closely reflected in terms of its individual movements, rather than its performance overall. For this reason, LOS for a two-way, stop-controlled intersection is defined in terms of its individual movements. With this in mind, total average vehicle delay (i.e., average delay of all movements) for a two-way, stop-controlled intersection should be viewed with discretion. Table 2 shows LOS criteria for unsignalized intersections (both all-way and two-way, stop-controlled).

Table 2. Level of Service Criteria for Unsignalized Intersections

Level of Service	Average Control Delay (sec/veh)
A	0 - 10
B	>10 - 15
C	>15 - 25
D	>25 - 35
E	>35 - 50
F	>50

Source: *Highway Capacity Manual*, Transportation Research Board, Special Report 209, 2000.

Appendix C. Traffic Counts

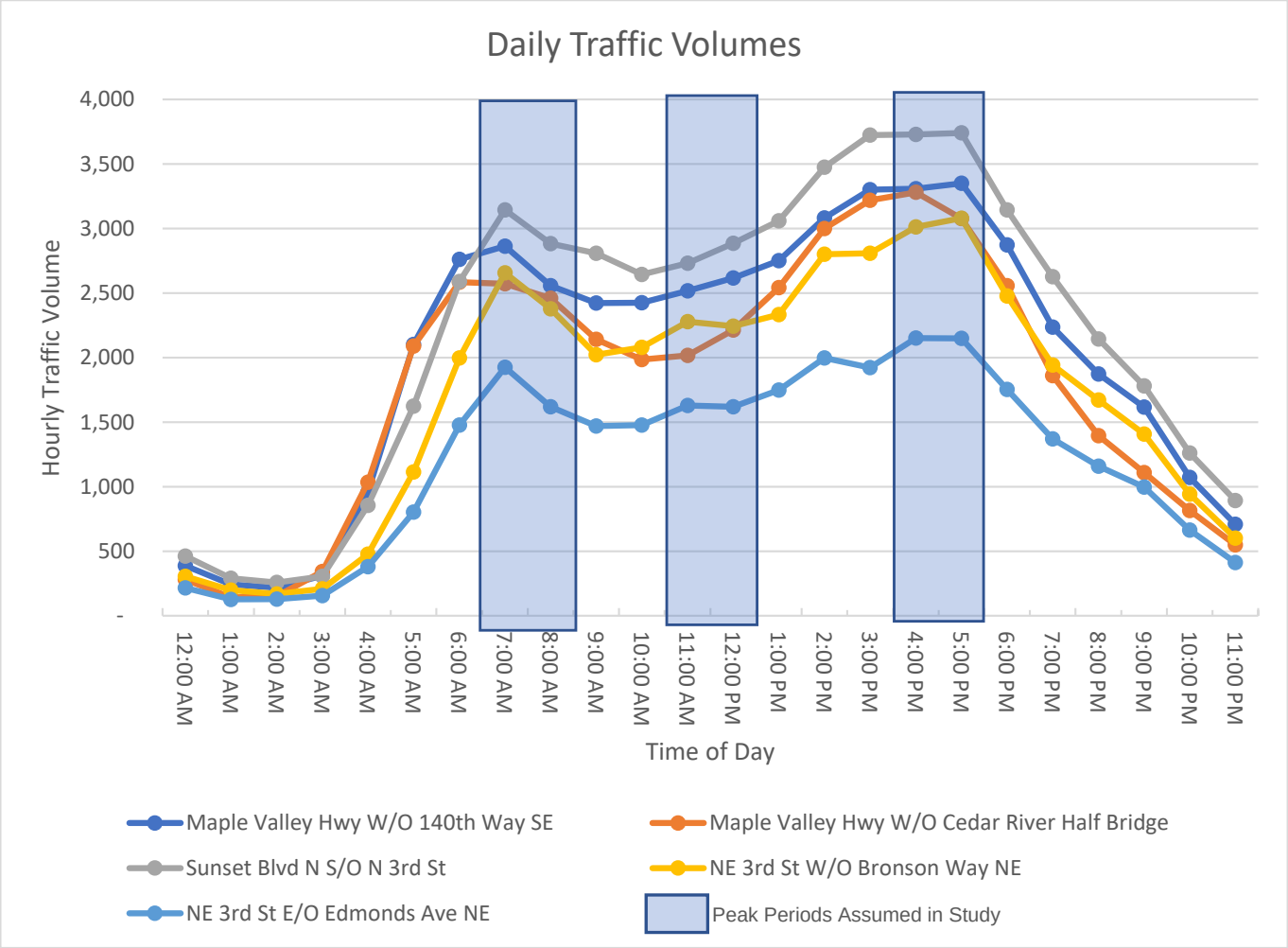
Daily Traffic Volumes
Hourly Traffic Volume
4,000
3,500
3,000
2,500
2,000
1,500
1,000
500
-
12:00 AM
1:00 AM
2:00 AM
3:00 AM
4:00 AM
5:00 AM
6:00 AM
7:00 AM
8:00 AM
9:00 AM
10:00 AM
11:00 AM
12:00 PM
1:00 PM
2:00 PM
3:00 PM
4:00 PM
5:00 PM
6:00 PM
7:00 PM
8:00 PM
9:00 PM
10:00 PM
11:00 PM
Time of Day
Maple Valley Hwy W/O 140th Way SE
Maple Valley Hwy W/O Cedar River Half Bridge
Sunset Blvd N S/O N 3rd St
NE 3rd St W/O Bronson Way NE
NE 3rd St E/O Edmonds Ave NE
Peak Periods Assumed in Study

Map - Cedar Grove Rd - AM Peak
Volumes

05/12/2017

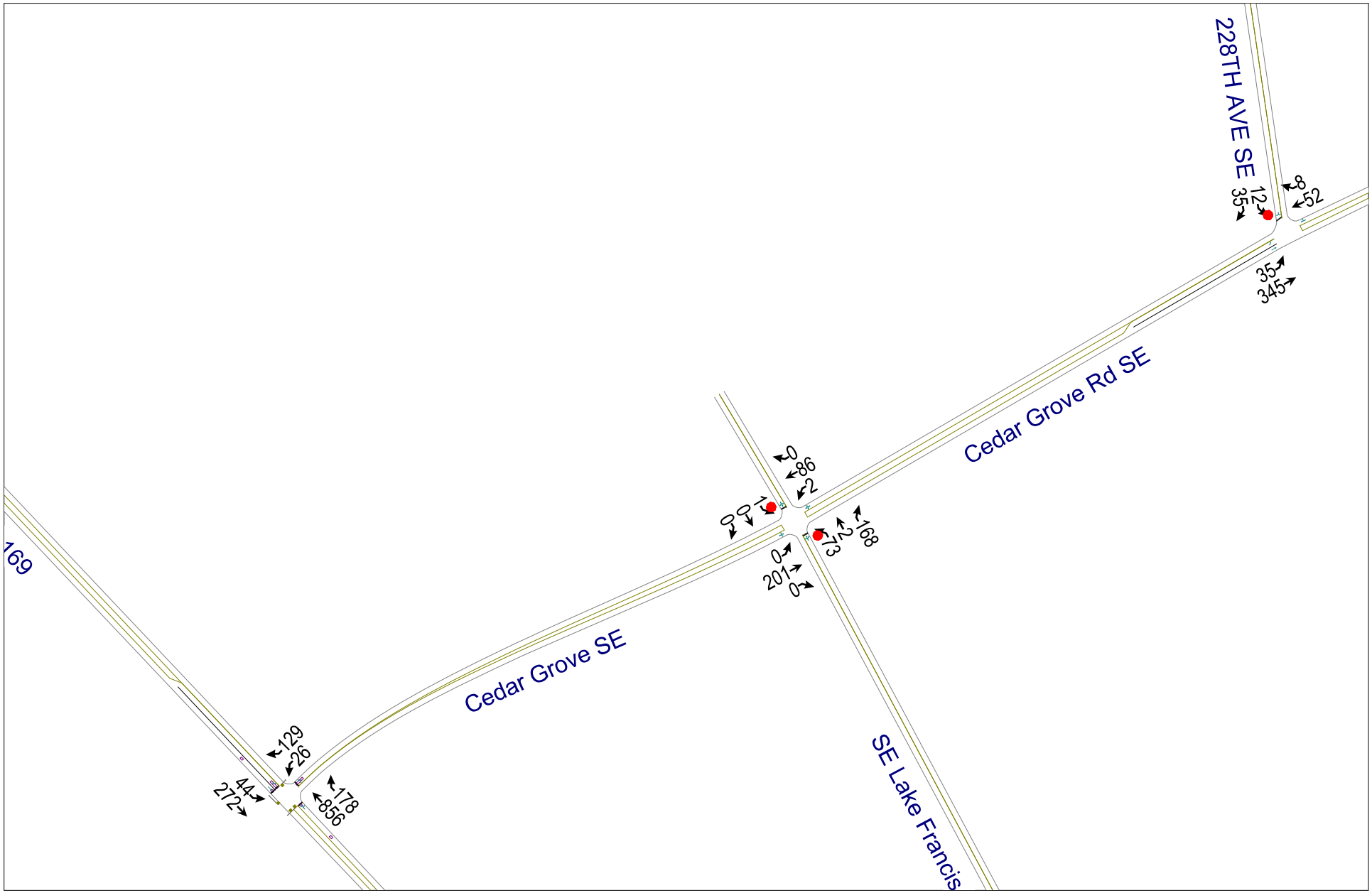

Cedar Grove Rd - AM Peak Baseline
Casseday Consulting

cedar hills AM.syn

Map - Cedar Grove Rd - MD Peak Volumes

05/12/2017

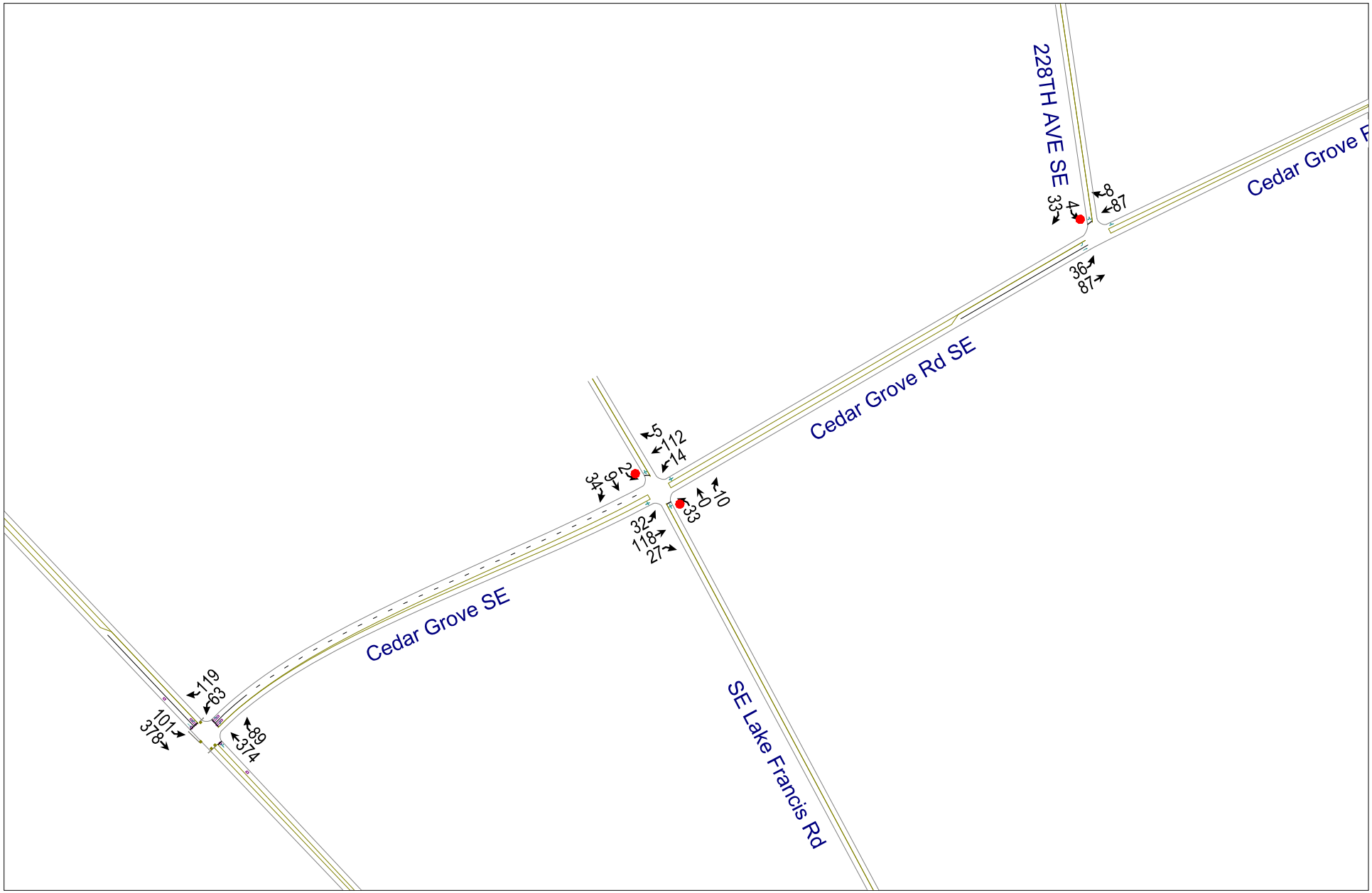

Cedar Grove Rd - MD Peak Baseline

Casseday Consulting

cedar hills MD.syn

Map - Cedar Grove Rd - PM Peak
Volumes **06/20/2017**

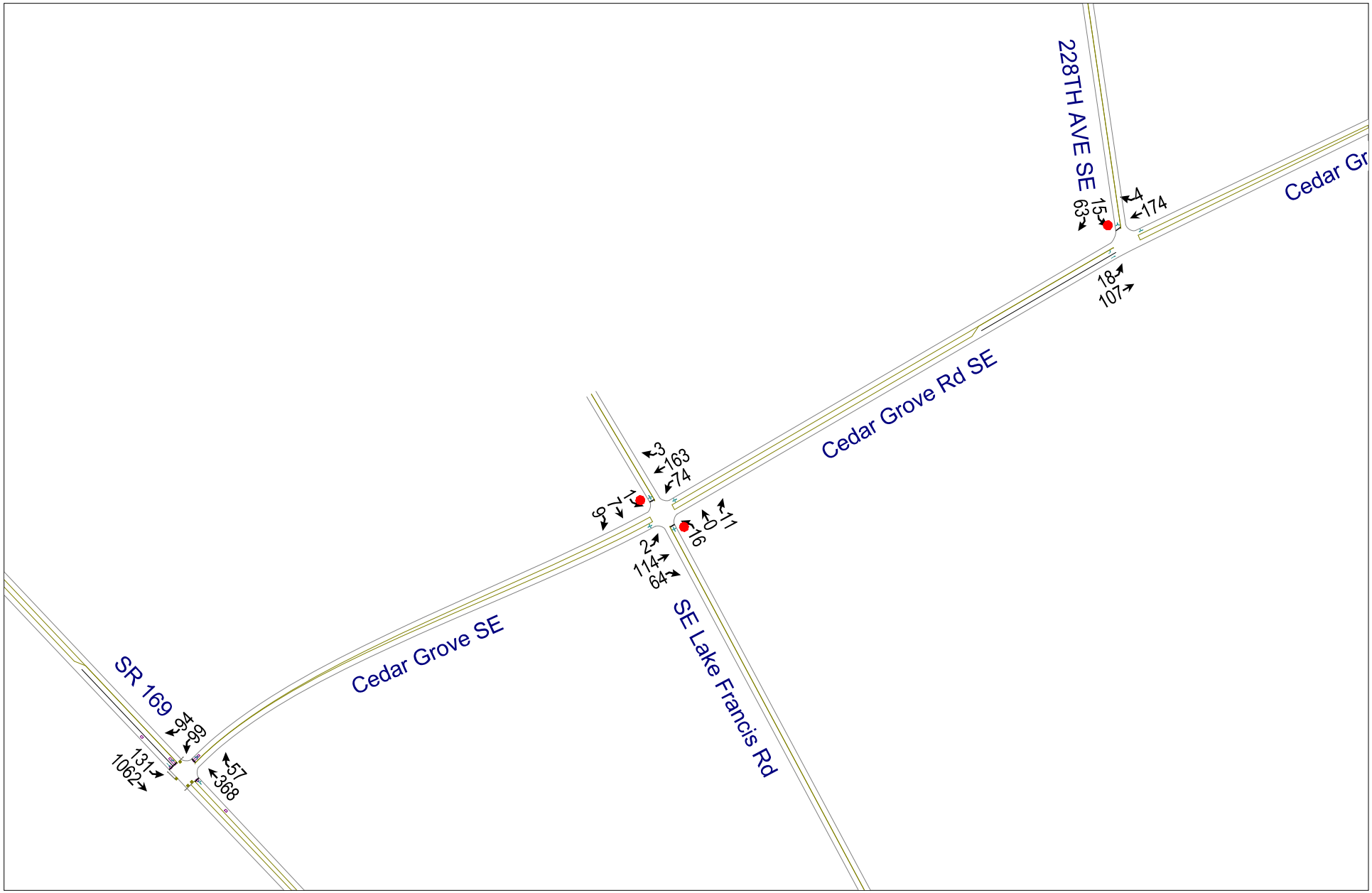

Cedar Grove Rd - PM Peak Baseline **cedar hills PM.syn**
Casseday Consulting

119A

City of Renton

1055 South Grady Way
Renton, WA 98057
Ahead of the Curve

RWM

Counter: T12-150
Counted By: K2G
Weather: CLOUDY
Other: DRY PAVEMENT

File Name : tmc119a
Site Code : 00000119
Start Date : 07/13/2017
Page No : 1

Groups Printed- CARS/PEDESTRIANS - HEAVY VEHICLES

	MAPLE VALLEY HY From East				CEDAR RIVER PARK DR From South				MAPLE VALLEY HY From West				
Start Time	Thru	Left	Peds	App. Total	Right	Left	Peds	App. Total	Right	Thru	Peds	App. Total	Int. Total
07:30 AM	494	3	0	497	0	14	0	14	21	133	0	154	665
07:45 AM	463	6	0	469	1	15	0	16	19	159	0	178	663
Total	957	9	0	966	1	29	0	30	40	292	0	332	1328
08:00 AM	491	3	0	494	3	12	0	15	16	170	0	186	695
08:15 AM	392	11	0	403	1	16	0	17	22	187	0	209	629
08:30 AM	442	12	0	454	6	20	0	26	22	185	0	207	687
08:45 AM	372	13	0	385	2	21	0	23	19	180	0	199	607
Total	1697	39	0	1736	12	69	0	81	79	722	0	801	2618
09:00 AM	304	5	0	309	4	18	0	22	16	186	0	202	533
09:15 AM	271	1	0	272	5	9	0	14	11	199	0	210	496
Grand Total	3229	54	0	3283	22	125	0	147	146	1399	0	1545	4975
Apprch %	98.4	1.6	0		15	85	0		9.4	90.6	0		
Total %	64.9	1.1	0	66	0.4	2.5	0	3	2.9	28.1	0	31.1	
CARS/PEDESTRIANS	3059	53	0	3112	22	124	0	146	141	1228	0	1369	4627
% CARS/PEDESTRIANS	94.7	98.1	0	94.8	100	99.2	0	99.3	96.6	87.8	0	88.6	93
HEAVY VEHICLES	170	1	0	171	0	1	0	1	5	171	0	176	348
% HEAVY VEHICLES	5.3	1.9	0	5.2	0	0.8	0	0.7	3.4	12.2	0	11.4	7

City of Renton

1055 South Grady Way
Renton, WA 98057
Ahead of the Curve

File Name : tmc119a
Site Code : 00000119
Start Date : 07/13/2017
Page No : 2

	MAPLE VALLEY HY From East				CEDAR RIVER PARK DR From South				MAPLE VALLEY HY From West				
Start Time	Thru	Left	Peds	App. Total	Right	Left	Peds	App. Total	Right	Thru	Peds	App. Total	Int. Total
Peak Hour Analysis From 07:30 AM to 09:15 AM - Peak 1 of 1													
Peak Hour for Entire Intersection Begins at 07:45 AM													
07:45 AM	463	6	0	469	1	15	0	16	19	159	0	178	663
08:00 AM	491	3	0	494	3	12	0	15	16	170	0	186	695
08:15 AM	392	11	0	403	1	16	0	17	22	187	0	209	629
08:30 AM	442	12	0	454	6	20	0	26	22	185	0	207	687
Total Volume	1788	32	0	1820	11	63	0	74	79	701	0	780	2674
% App. Total	98.2	1.8	0		14.9	85.1	0		10.1	89.9	0		
PHF	.910	.667	.000	.921	.458	.788	.000	.712	.898	.937	.000	.933	.962

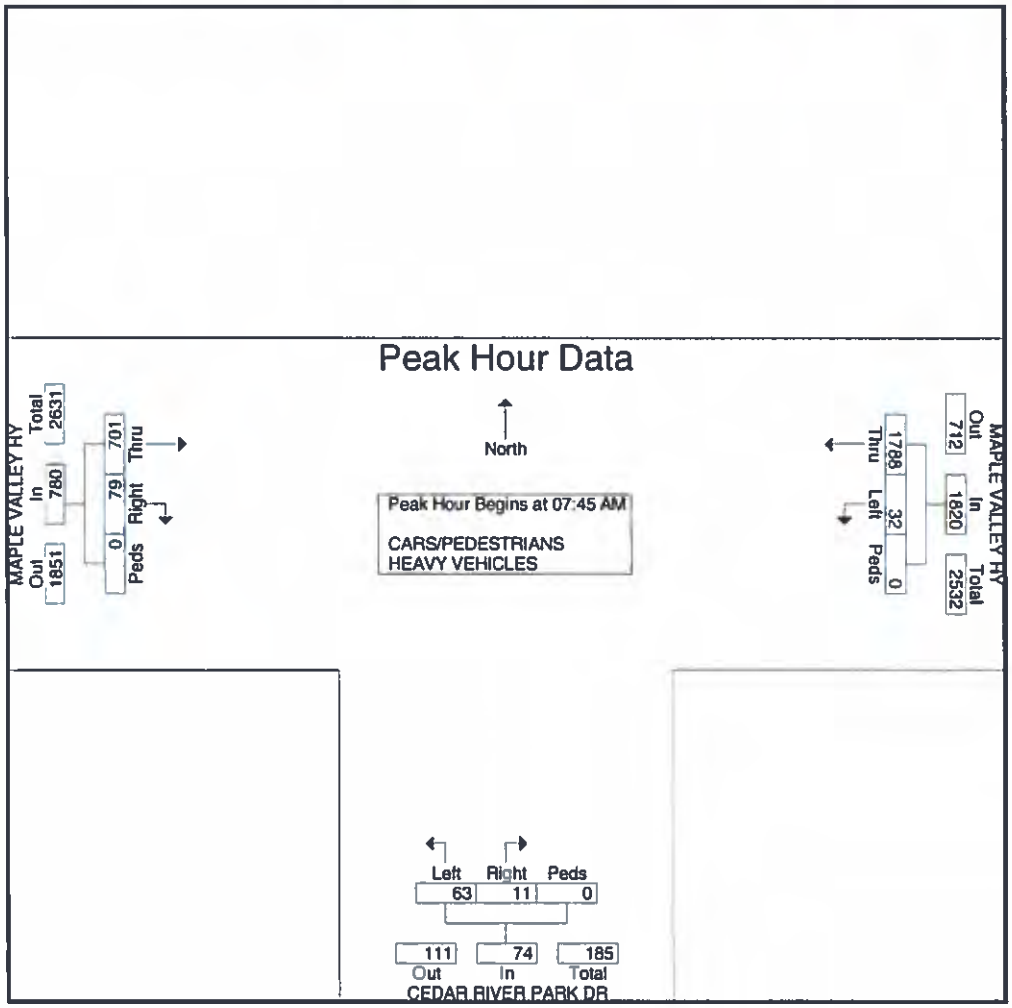

City of Renton

Transportation Systems Division
Traffic Operations
2010 Studies

Counter: T-0919
Counted By: DLS/HVP
Weather: CUMULUS FRACTUS, 55'F
Other: DRY PAVEMENT, WINDS 19 MPH

File Name : TMC119M
Site Code : 00000119
Start Date : 05/03/2010
Page No : 1

Groups Printed- CARS/PEDESTRIANS - HEAVY VEHICLES

	MAPLE VALLEY HY From East				CEDAR RIVER PARK ENTRANCE From South				MAPLE VALLEY HY From West				
Start Time	Thru	Left	Peds	App. Total	Right	Left	Peds	App. Total	Right	Thru	Peds	App. Total	Int. Total
11:00	260	5	1	266	1	18	0	19	9	192	0	201	486
11:15	268	5	0	273	4	9	0	13	13	225	0	238	524
11:30	245	9	0	254	4	10	0	14	13	226	0	239	507
11:45	259	2	1	262	5	14	1	20	9	229	0	238	520
Total	1032	21	2	1055	14	51	1	66	44	872	0	916	2037
12:00	270	3	0	273	1	6	0	7	9	222	0	231	511
12:15	266	7	0	273	7	18	1	26	11	258	0	269	568
12:30	258	2	0	260	2	13	0	15	6	267	0	273	548
12:45	270	0	0	270	3	7	0	10	4	263	0	267	547
Total	1064	12	0	1076	13	44	1	58	30	1010	0	1040	2174
Grand Total	2096	33	2	2131	27	95	2	124	74	1882	0	1956	4211
Apprch %	98.4	1.5	0.1		21.8	76.6	1.6		3.8	96.2	0		
Total %	49.8	0.8	0	50.6	0.6	2.3	0	2.9	1.8	44.7	0	46.4	
CARS/PEDESTRIANS	1975	16	2	1993	15	75	2	92	60	1775	0	1835	3920
% CARS/PEDESTRIANS	94.2	48.5	100	93.5	55.6	78.9	100	74.2	81.1	94.3	0	93.8	93.1
HEAVY VEHICLES	121	17	0	138	12	20	0	32	14	107	0	121	291
% HEAVY VEHICLES	5.8	51.5	0	6.5	44.4	21.1	0	25.8	18.9	5.7	0	6.2	6.9

	MAPLE VALLEY HY From East				CEDAR RIVER PARK ENTRANCE From South				MAPLE VALLEY HY From West				
Start Time	Thru	Left	Peds	App. Total	Right	Left	Peds	App. Total	Right	Thru	Peds	App. Total	Int. Total
Peak Hour Analysis From 11:00 to 12:45 - Peak 1 of 1													
Peak Hour for Entire Intersection Begins at 12:00													
12:00	270	3	0	273	1	6	0	7	9	222	0	231	511
12:15	266	7	0	273	7	18	1	26	11	258	0	269	568
12:30	258	2	0	260	2	13	0	15	6	267	0	273	548
12:45	270	0	0	270	3	7	0	10	4	263	0	267	547
Total Volume	1064	12	0	1076	13	44	1	58	30	1010	0	1040	2174
% App. Total	98.9	1.1	0		22.4	75.9	1.7		2.9	97.1	0		
PHF	.985	.429	.000	.985	.464	.611	.250	.558	.682	.946	.000	.952	.957

119M

City of Renton

Transportation Systems Division
Traffic Operations
2010 Studies

Counter: T-0919
Counted By: DLS/HVP
Weather: CUMULUS FRACTUS, 55'F
Other: DRY PAVEMENT, WINDS 19 MPH

File Name : TMC119M
Site Code : 00000119
Start Date : 05/03/2010
Page No : 2

Peak Hour Data

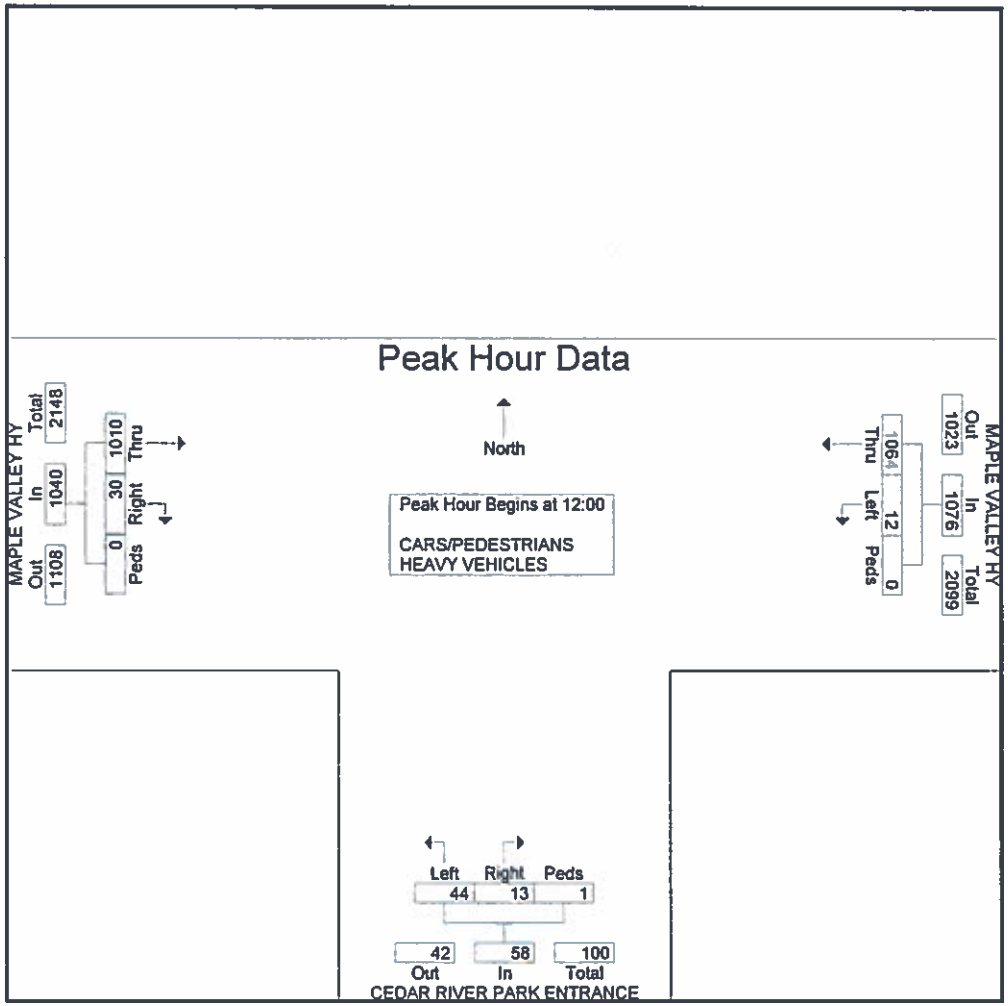

City of Renton
Transportation Systems Division
Traffic Counts
2010 Sites

Counter: T12-150
Counted By: DOH/HVP
Weather: CLOUDY
Other: DRY

File Name : TMC119P
Site Code : 00000119
Start Date : 05/24/2010
Page No : 1

Groups Printed- CARS/PEDESTRIANS - HEAVY VEHICLES

	MAPLE VALLEY HY From East				PARK PL From South				MAPLE VALLEY HY From West				
Start Time	Thru	Left	Peds	App. Total	Right	Left	Peds	App. Total	Right	Thru	Peds	App. Total	Int. Total
16:00	220	4	0	224	2	12	0	14	3	567	0	570	808
16:15	225	0	0	225	14	12	0	26	8	544	0	552	803
16:30	231	0	0	231	7	9	0	16	9	666	0	675	922
16:45	255	4	0	259	7	10	0	17	10	620	0	630	906
Total	931	8	0	939	30	43	0	73	30	2397	0	2427	3439
17:00	234	6	0	240	10	11	1	22	10	643	0	653	915
17:15	223	8	0	231	3	4	0	7	8	531	0	539	777
17:30	209	11	0	220	9	4	0	13	12	545	0	557	790
17:45	231	1	0	232	7	11	0	18	16	573	0	589	839
Total	897	26	0	923	29	30	1	60	46	2292	0	2338	3321
Grand Total	1828	34	0	1862	59	73	1	133	76	4689	0	4765	6760
Apprch %	98.2	1.8	0		44.4	54.9	0.8		1.6	98.4	0		
Total %	27	0.5	0	27.5	0.9	1.1	0	2	1.1	69.4	0	70.5	
CARS/PEDESTRIANS	1790	34	0	1824	59	67	1	127	72	4630	0	4702	6653
% CARS/PEDESTRIANS	97.9	100	0	98	100	91.8	100	95.5	94.7	98.7	0	98.7	98.4
HEAVY VEHICLES	38	0	0	38	0	6	0	6	4	59	0	63	107
% HEAVY VEHICLES	2.1	0	0	2	0	8.2	0	4.5	5.3	1.3	0	1.3	1.6

	MAPLE VALLEY HY From East				PARK PL From South				MAPLE VALLEY HY From West				
Start Time	Thru	Left	Peds	App. Total	Right	Left	Peds	App. Total	Right	Thru	Peds	App. Total	Int. Total
Peak Hour Analysis From 16:00 to 17:45 - Peak 1 of 1													
Peak Hour for Entire Intersection Begins at 16:15													
16:15	225	0	0	225	14	12	0	26	8	544	0	552	803
16:30	231	0	0	231	7	9	0	16	9	666	0	675	922
16:45	255	4	0	259	7	10	0	17	10	620	0	630	906
17:00	234	6	0	240	10	11	1	22	10	643	0	653	915
Total Volume	945	10	0	955	38	42	1	81	37	2473	0	2510	3546
% App. Total	99	1	0		46.9	51.9	1.2		1.5	98.5	0		
PHF	.926	.417	.000	.922	.679	.875	.250	.779	.925	.928	.000	.930	.961

119P

City of Renton

Transportation Systems Division
Traffic Operations
2010 Studies

Counter: T12-150
Counted By: DOH/HVP
Weather: CLOUDY
Other: DRY

File Name : TMC119P
Site Code : 00000119
Start Date : 05/24/2010
Page No : 2

Peak Hour Data

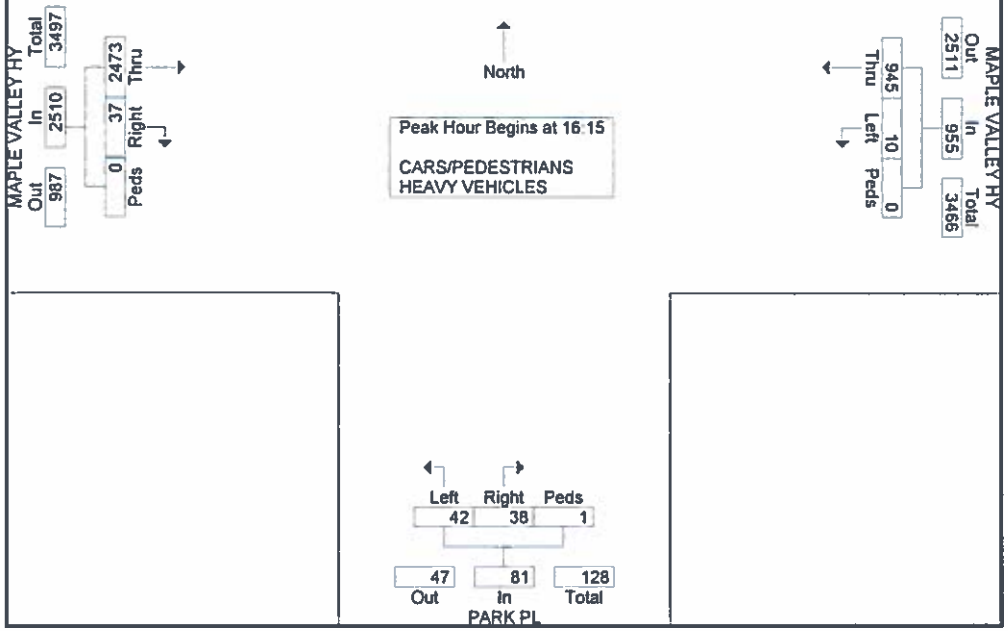

134 A

All Traffic Data Services Inc.

(303) 216-2439
www.alltrafficdata.net

Location: 134 140TH AVE SE & MAPLE VALLEY HIGHWAY AM
Date and Start Time: Thursday, March 22, 2018
Peak Hour: 07:45 AM - 08:45 AM
Peak 15-Minutes: 08:00 AM - 08:15 AM

RWM

Peak Hour

All Vehicles

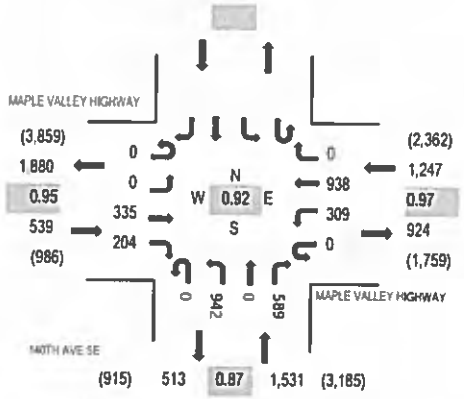

Heavy Vehicles

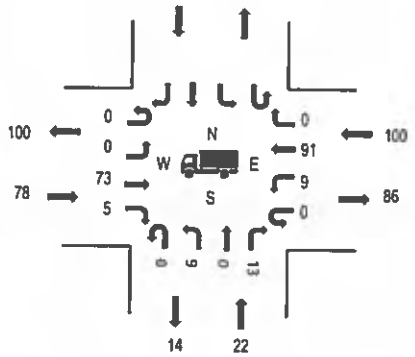

Pedestrians/Bicycles in Crosswalk

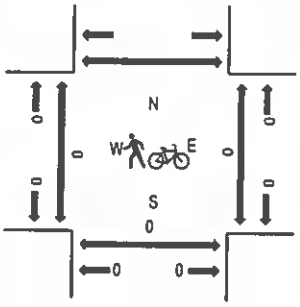

Note: Total study counts contained in parentheses.

	HV%	PHF
EB	14.5%	0.95
WB	8.0%	0.97
NB	1.4%	0.87
SB		
All	6.0%	0.92

Traffic Counts - All Vehicles

Interval Start Time	MAPLE VALLEY HIGHWAY Eastbound				MAPLE VALLEY HIGHWAY Westbound				140TH AVE SE Northbound				Southbound				Total	Rolling Hour
	U-Turn	Left	Thru	Right	U-Turn	Left	Thru	Right	U-Turn	Left	Thru	Right	U-Turn	Left	Thru	Right		
7:00 AM	1	0	55	38	0	53	247	0	0	336	0	138					868	3,282
7:15 AM	0	0	72	40	0	51	230	0	0	331	0	156					880	3,311
7:30 AM	0	0	80	39	0	67	184	0	0	224	0	140					734	3,259
7:45 AM	0	0	67	54	0	79	226	0	0	234	0	140					800	3,317
8:00 AM	0	0	87	50	0	65	248	0	0	279	0	168					897	3,251
8:15 AM	0	0	90	49	0	86	234	0	0	199	0	170					828	
8:30 AM	0	0	91	51	0	79	230	0	0	230	0	111					792	
8:45 AM	0	0	68	54	0	60	223	0	0	203	0	126					734	
Count Total	1	0	610	375	0	540	1,822	0	0	2,036	0	1,149					6,533	
Peak Hour	0	0	335	204	0	309	938	0	0	942	0	589					3,317	

Traffic Counts - Heavy Vehicles and Pedestrians/Bicycles in Crosswalk

Interval Start Time	Heavy Vehicles					Interval Start Time	Pedestrians/Bicycles on Crosswalk				
	EB	NB	WB	SB	Total		EB	NB	WB	SB	Total
7:00 AM	6	4	19		29	7:00 AM	0	0	0		0
7:15 AM	20	13	20		53	7:15 AM	0	0	0		0
7:30 AM	21	8	18		47	7:30 AM	0	0	0		0
7:45 AM	21	7	21		49	7:45 AM	0	0	0		0
8:00 AM	16	6	20		42	8:00 AM	0	0	0		0
8:15 AM	16	7	29		52	8:15 AM	0	0	0		0
8:30 AM	25	2	30		57	8:30 AM	0	0	0		0
8:45 AM	19	6	23		48	8:45 AM	0	0	0		0
Count Total	144	53	180		377	Count Total	0	0	0		0
Peak Hour	78	22	100		200	Peak Hour	0	0	0		0

134M

All Traffic Data Services Inc.

(303) 216-2439
www.alltrafficdata.net

Location: 134 140TH AVE SE & MAPLE VALLEY HIGHWAY Noon
Date and Start Time: Thursday, March 22, 2018
Peak Hour: 11:45 AM - 12:45 PM
Peak 15-Minutes: 11:45 AM - 12:00 PM

RWM

Peak Hour

All Vehicles

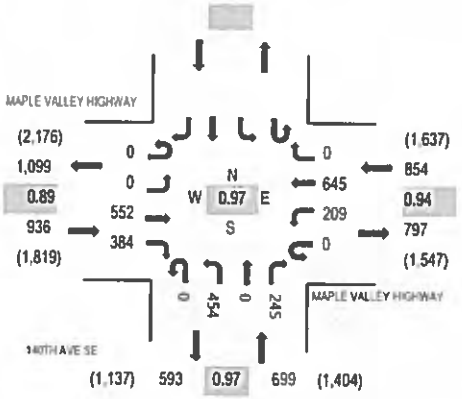

Heavy Vehicles

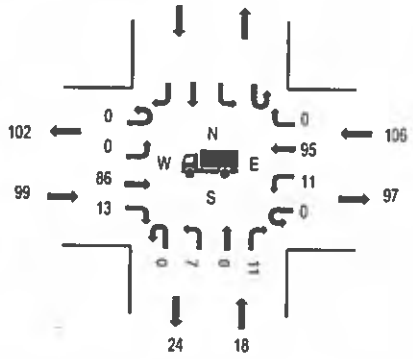

Pedestrians/Bicycles in Crosswalk

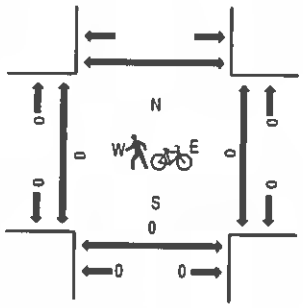

Note: Total study counts contained in parentheses.

	HV%	PHF
EB	10.6%	0.89
WB	12.4%	0.94
NB	2.6%	0.97
SB		
All	9.0%	0.97

Traffic Counts - All Vehicles

Interval Start Time	MAPLE VALLEY HIGHWAY Eastbound				MAPLE VALLEY HIGHWAY Westbound				140TH AVE SE Northbound				Southbound				Total	Rolling Hour
	U-Turn	Left	Thru	Right	U-Turn	Left	Thru	Right	U-Turn	Left	Thru	Right	U-Turn	Left	Thru	Right		
11:00 AM	0	0	128	85	0	40	142	0	0	128	0	56					579	2,424
11:15 AM	0	0	135	87	0	45	139	0	0	123	0	66					595	2,467
11:30 AM	0	0	126	74	0	53	167	0	0	128	0	60					608	2,461
11:45 AM	0	0	120	102	0	56	169	0	0	123	0	72					642	2,489
12:00 PM	0	0	143	82	0	53	178	0	0	104	0	62					622	2,436
12:15 PM	0	0	127	92	0	48	146	0	0	114	0	62					589	
12:30 PM	0	0	162	108	0	52	152	0	0	113	0	49					636	
12:45 PM	0	0	146	102	0	58	139	0	0	111	0	33					589	
Count Total	0	0	1,087	732	0	405	1,232	0	0	944	0	460					4,860	
Peak Hour	0	0	552	384	0	209	645	0	0	454	0	245					2,489	

Traffic Counts - Heavy Vehicles and Pedestrians/Bicycles in Crosswalk

Interval Start Time	Heavy Vehicles					Interval Start Time	Pedestrians/Bicycles on Crosswalk				
	EB	NB	WB	SB	Total		EB	NB	WB	SB	Total
11:00 AM	31	11	26		68	11:00 AM	0	0	0		0
11:15 AM	32	5	33		70	11:15 AM	0	0	0		0
11:30 AM	31	5	29		65	11:30 AM	0	0	0		0
11:45 AM	19	0	34		53	11:45 AM	0	0	0		0
12:00 PM	15	7	29		51	12:00 PM	0	0	0		0
12:15 PM	32	7	25		64	12:15 PM	0	0	0		0
12:30 PM	33	4	18		55	12:30 PM	0	0	0		0
12:45 PM	23	5	21		49	12:45 PM	0	0	2		2
Count Total	216	44	215		475	Count Total	0	0	2		2
Peak Hour	99	18	106		223	Peak Hour	0	0	0		0

134 P

All Traffic Data Services Inc.

(303) 216-2439
www.alltrafficdata.net

Location: 134 140TH AVE SE & MAPLE VALLEY HIGHWAY PM
Date and Start Time: Thursday, March 22, 2018
Peak Hour: 05:00 PM - 06:00 PM
Peak 15-Minutes: 05:30 PM - 05:45 PM

RWM

Peak Hour

All Vehicles

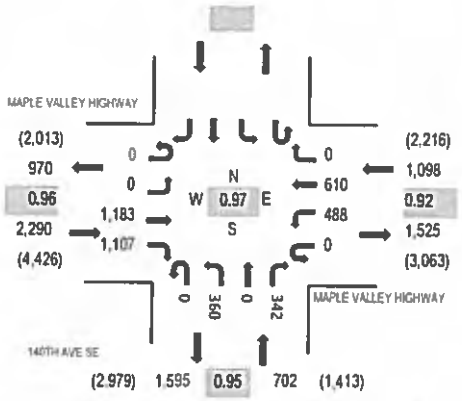

Note: Total study counts contained in parentheses.

	HV%	PHF
EB	1.4%	0.96
WB	1.6%	0.92
NB	1.0%	0.95
SB		
All	1.4%	0.97

Heavy Vehicles

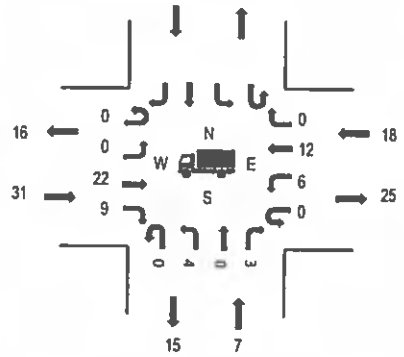

Pedestrians/Bicycles in Crosswalk

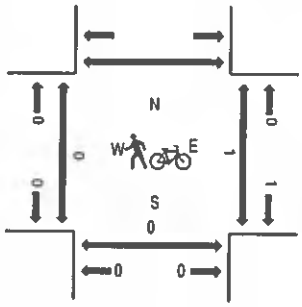

Traffic Counts - All Vehicles

Interval Start Time	MAPLE VALLEY HIGHWAY Eastbound U-Turn	Left	Thru	Right	MAPLE VALLEY HIGHWAY Westbound U-Turn	Left	Thru	Right	140TH AVE SE Northbound U-Turn	Left	Thru	Right	Southbound U-Turn	Left	Thru	Right	Total	Rolling Hour
4:00 PM	0	0	302	235	0	131	143	0	0	85	0	77					973	3,965
4:15 PM	0	0	301	208	0	88	151	0	0	91	0	89					928	4,028
4:30 PM	0	0	294	254	0	90	220	0	0	94	0	92					1,044	4,076
4:45 PM	0	0	299	243	0	135	160	0	0	99	0	84					1,020	4,087
5:00 PM	0	0	278	279	0	129	153	0	0	104	0	93					1,036	4,090
5:15 PM	0	0	279	278	0	87	163	0	0	87	0	82					976	
5:30 PM	0	0	314	280	0	142	146	0	0	87	0	86					1,055	
5:45 PM	0	0	312	270	0	130	148	0	0	82	0	81					1,023	
Count Total	0	0	2,379	2,047	0	932	1,284	0	0	729	0	684					8,055	
Peak Hour	0	0	1,183	1,107	0	488	610	0	0	360	0	342					4,090	

Traffic Counts - Heavy Vehicles and Pedestrians/Bicycles in Crosswalk

Interval Start Time	Heavy Vehicles EB	NB	WB	SB	Total	Interval Start Time	Pedestrians/Bicycles on Crosswalk EB	NB	WB	SB	Total
4:00 PM	10	5	9		24	4:00 PM	0	0	0		0
4:15 PM	8	1	10		19	4:15 PM	0	0	0		0
4:30 PM	7	3	7		17	4:30 PM	0	0	1		1
4:45 PM	8	2	4		14	4:45 PM	0	0	0		0
5:00 PM	7	4	6		17	5:00 PM	0	0	0		0
5:15 PM	4	0	6		10	5:15 PM	0	0	0		0
5:30 PM	16	3	5		24	5:30 PM	0	0	0		0
5:45 PM	4	0	1		5	5:45 PM	0	0	1		1
Count Total	64	18	48		130	Count Total	0	0	2		2
Peak Hour	31	7	18		56	Peak Hour	0	0	1		1

-588.
145 A

All Traffic Data Services Inc.

(303) 216-2439
www.alltrafficdata.net

Location: 588 154TH PL SE & MAPLE VALLEY HIGHWAY AM
Date and Start Time: Wednesday, July 11, 2018
Peak Hour: 07:00 AM - 08:00 AM
Peak 15-Minutes: 07:45 AM - 08:00 AM

KWM

Peak Hour

All Vehicles

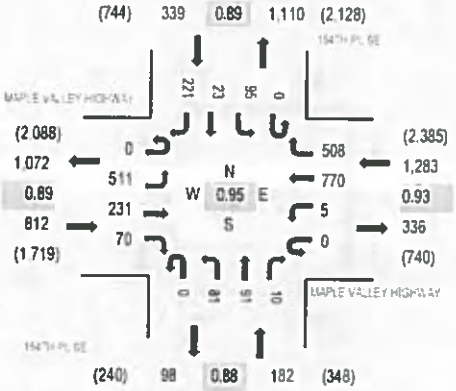

Note: Total study counts contained in parentheses.

	HV%	PHF
EB	6.8%	0.89
WB	7.0%	0.93
NB	0.5%	0.88
SB	3.5%	0.89
All	6.0%	0.95

Heavy Vehicles

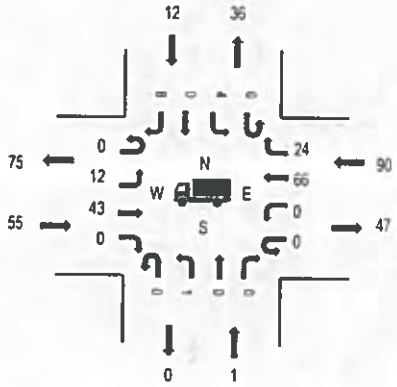

Pedestrians/Bicycles in Crosswalk

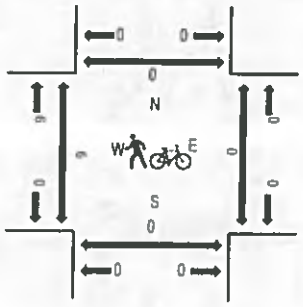

Traffic Counts - All Vehicles

Interval Start Time	MAPLE VALLEY HIGHWAY Eastbound				MAPLE VALLEY HIGHWAY Westbound				154TH PL SE Northbound				154TH PL SE Southbound				Total	Rolling Hour
	U-Turn	Left	Thru	Right	U-Turn	Left	Thru	Right	U-Turn	Left	Thru	Right	U-Turn	Left	Thru	Right		
7:00 AM	0	122	53	24	0	2	188	140	0	20	28	4	0	15	1	34	631	2,616
7:15 AM	0	137	49	20	0	2	185	105	0	16	31	2	0	26	5	58	636	2,607
7:30 AM	0	116	54	9	0	0	189	128	0	30	19	3	0	31	8	75	662	2,594
7:45 AM	0	136	75	17	0	1	208	135	0	15	13	1	0	23	9	64	697	2,582
8:00 AM	0	126	64	18	0	6	145	118	0	29	21	2	0	26	6	61	622	2,580
8:15 AM	0	123	67	13	0	1	176	115	0	27	8	1	0	28	8	56	623	
8:30 AM	0	148	89	18	0	5	138	106	0	18	15	7	0	24	11	71	650	
8:45 AM	0	129	75	37	0	5	192	95	0	21	14	3	0	18	14	82	685	
Count Total	0	1,037	526	156	0	22	1,421	942	0	176	149	23	0	191	62	491	5,196	
Peak Hour	0	511	231	70	0	5	770	508	0	81	91	10	0	95	23	221	2,616	

Traffic Counts - Heavy Vehicles and Pedestrians/Bicycles in Crosswalk

Interval Start Time	Heavy Vehicles					Interval Start Time	Pedestrians/Bicycles on Crosswalk				
	EB	NB	WB	SB	Total		EB	NB	WB	SB	Total
7:00 AM	10	0	23	0	33	7:00 AM	1	0	0	0	1
7:15 AM	10	1	24	1	36	7:15 AM	5	0	0	0	5
7:30 AM	16	0	23	7	46	7:30 AM	0	0	0	0	0
7:45 AM	19	0	20	4	43	7:45 AM	0	0	0	0	0
8:00 AM	21	0	18	1	40	8:00 AM	1	0	0	0	1
8:15 AM	17	0	23	3	43	8:15 AM	1	2	0	0	3
8:30 AM	14	1	19	5	39	8:30 AM	0	0	0	0	0
8:45 AM	28	0	19	3	50	8:45 AM	0	1	1	0	2
Count Total	135	2	169	24	330	Count Total	8	3	1	0	12
Peak Hour	55	1	90	12	158	Peak Hour	6	0	0	0	6

~~588N~~
145 M

All Traffic Data Services Inc.

(303) 216-2439
www.alltrafficdata.net

Location: 588 154TH PL SE & MAPLE VALLEY HIGHWAY Noon
Date and Start Time: Wednesday, July 11, 2018
Peak Hour: 12:00 PM - 01:00 PM
Peak 15-Minutes: 12:45 PM - 01:00 PM

RWM

Peak Hour

All Vehicles

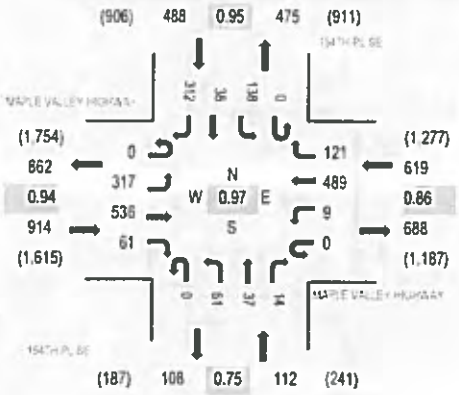

Heavy Vehicles

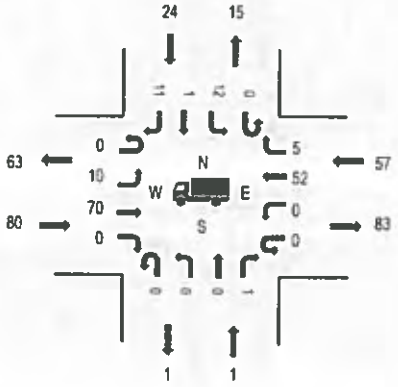

Pedestrians/Bicycles in Crosswalk

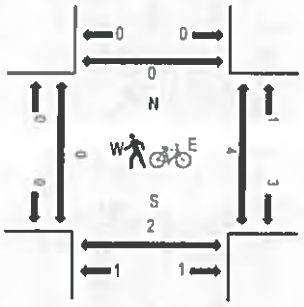

Note: Total study counts contained in parentheses.

	HV%	PHF
EB	8.8%	0.94
WB	9.2%	0.86
NB	0.9%	0.75
SB	4.9%	0.95
All	7.6%	0.97

Traffic Counts - All Vehicles

Interval Start Time	MAPLE VALLEY HIGHWAY Eastbound				MAPLE VALLEY HIGHWAY Westbound				154TH PL SE Northbound				154TH PL SE Southbound					Rolling Hour
	U-Turn	Left	Thru	Right	U-Turn	Left	Thru	Right	U-Turn	Left	Thru	Right	U-Turn	Left	Thru	Right	Total	
11:00 AM	0	78	84	10	0	1	128	36	0	23	13	7	0	20	5	61	466	1,906
11:15 AM	0	68	84	8	0	2	167	22	0	18	6	2	0	28	7	70	482	1,965
11:30 AM	0	65	115	10	0	2	123	29	0	20	12	2	0	30	10	71	489	2,024
11:45 AM	0	73	94	12	0	6	115	27	0	16	7	3	0	30	6	80	469	2,053
12:00 PM	0	73	116	20	0	1	127	32	0	17	9	2	0	41	9	78	525	2,133
12:15 PM	0	88	139	13	0	3	119	33	0	16	6	3	0	41	5	75	541	
12:30 PM	0	76	134	13	0	2	122	22	0	15	11	6	0	23	13	81	518	
12:45 PM	0	80	141	15	0	3	121	34	0	13	11	3	0	33	14	76	549	
Count Total	0	601	913	101	0	20	1,022	235	0	138	75	28	0	246	66	594	4,039	
Peak Hour	0	317	536	61	0	9	489	121	0	61	37	14	0	138	38	312	2,133	

Traffic Counts - Heavy Vehicles and Pedestrians/Bicycles in Crosswalk

Interval Start Time	Heavy Vehicles					Interval Start Time	Pedestrians/Bicycles on Crosswalk				
	EB	NB	WB	SB	Total		EB	NB	WB	SB	Total
11:00 AM	10	1	21	8	40	11:00 AM	0	0	2	0	2
11:15 AM	18	0	23	5	46	11:15 AM	0	1	0	1	2
11:30 AM	30	1	15	4	50	11:30 AM	0	0	0	0	0
11:45 AM	25	0	18	8	51	11:45 AM	0	0	0	0	0
12:00 PM	13	0	15	6	34	12:00 PM	0	0	1	0	1
12:15 PM	26	0	13	4	43	12:15 PM	0	2	2	0	4
12:30 PM	19	0	13	4	36	12:30 PM	0	0	0	0	0
12:45 PM	22	1	15	10	48	12:45 PM	0	0	1	0	1
Count Total	163	3	134	49	349	Count Total	0	3	6	1	10
Peak Hour	80	1	57	24	162	Peak Hour	0	2	4	0	6

5881
145 F

All Traffic Data Services Inc.

(303) 216-2439
www.alltrafficdata.net

Location: 588 154TH PL SE & MAPLE VALLEY HIGHWAY PM
Date and Start Time: Wednesday, July 11, 2018
Peak Hour: 04:30 PM - 05:30 PM
Peak 15-Minutes: 04:30 PM - 04:45 PM

RWM

Peak Hour

All Vehicles

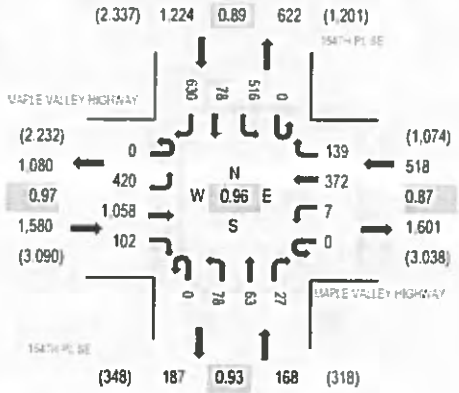

Note: Total study counts contained in parentheses.

	HV%	PHF
EB	2.3%	0.97
WB	3.1%	0.87
NB	0.0%	0.93
SB	1.6%	0.89
All	2.1%	0.96

Heavy Vehicles

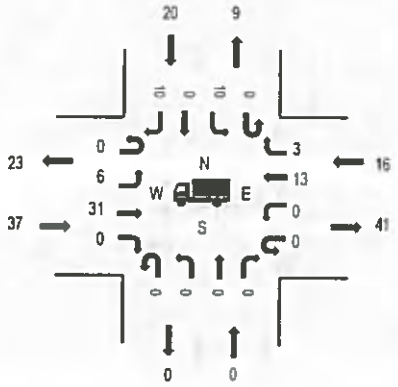

Pedestrians/Bicycles in Crosswalk

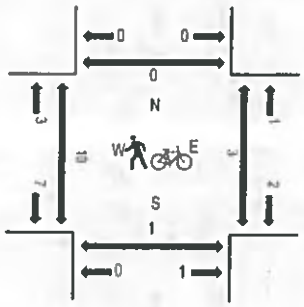

Traffic Counts - All Vehicles

Interval Start Time	MAPLE VALLEY HIGHWAY Eastbound				MAPLE VALLEY HIGHWAY Westbound				154TH PL SE Northbound				154TH PL SE Southbound				Total	Rolling Hour
	U-Turn	Left	Thru	Right	U-Turn	Left	Thru	Right	U-Turn	Left	Thru	Right	U-Turn	Left	Thru	Right		
4:00 PM	0	111	249	19	0	1	98	25	0	18	6	4	0	100	14	160	805	3,437
4:15 PM	0	101	257	20	0	2	109	46	0	18	9	12	0	99	16	148	839	3,447
4:30 PM	0	95	243	21	0	2	154	34	0	22	15	8	0	136	22	156	903	3,490
4:45 PM	0	89	257	28	0	2	100	26	0	20	16	5	0	147	22	173	885	3,456
5:00 PM	0	116	242	36	0	3	78	38	0	22	13	8	0	106	24	129	815	3,382
5:15 PM	0	120	266	17	0	0	90	41	0	14	19	6	0	127	10	172	882	
5:30 PM	0	105	267	25	0	6	118	31	0	21	14	7	0	97	11	172	874	
5:45 PM	0	81	248	27	0	2	82	36	0	20	14	7	0	90	16	188	811	
Count Total	0	818	2,079	193	0	18	779	277	0	155	106	57	0	902	137	1,298	6,819	
Peak Hour	0	420	1,058	102	0	7	372	139	0	78	63	27	0	516	78	630	3,490	

Traffic Counts - Heavy Vehicles and Pedestrians/Bicycles in Crosswalk

Interval Start Time	Heavy Vehicles EB	NB	WB	SB	Total	Interval Start Time	Pedestrians/Bicycles on Crosswalk EB	NB	WB	SB	Total
4:00 PM	9	0	7	2	18	4:00 PM	1	0	2	0	3
4:15 PM	9	0	7	8	24	4:15 PM	1	0	1	1	3
4:30 PM	14	0	6	5	25	4:30 PM	2	0	1	0	3
4:45 PM	11	0	3	8	22	4:45 PM	5	1	1	0	7
5:00 PM	7	0	4	4	15	5:00 PM	2	0	1	0	3
5:15 PM	5	0	3	3	11	5:15 PM	1	0	0	0	1
5:30 PM	5	0	1	4	10	5:30 PM	0	0	3	0	3
5:45 PM	7	0	4	7	18	5:45 PM	0	0	3	0	3
Count Total	67	0	35	41	143	Count Total	12	1	12	1	26
Peak Hour	37	0	16	20	73	Peak Hour	10	1	3	0	14

All Traffic Data Services

A-15 I-405 NB OFF RAMP & SR 169 AM
Wednesday, July 13, 2016

Peak Hour
08:00 AM - 09:00 AM
Peak 15-Minutes
08:45 AM - 09:00 AM

Traffic Counts - All Vehicles

	SR 169					SR 169					I-405 NB OFF RAMP					I-405 NB RAMPS						
	Eastbound					Westbound					Northbound					Southbound						Rolling
Time	U-Turn	Left	Thru	Right	RTOR	U-Turn	Left	Thru	Right	RTOR	U-Turn	Left	Thru	Right	RTOR	U-Turn	Left	Thru	Right	RTOR	Total	Hour
7:00 AM	0	4	78	0	0	0	0	504	120	0	0	0	0	64	0	0	0	0	150	0	920	3,506
7:15 AM	0	8	92	0	0	0	0	451	140	0	0	0	0	65	0	0	0	0	149	0	905	3,481
7:30 AM	0	2	90	0	0	0	0	397	96	0	0	0	0	70	0	0	0	0	141	0	796	3,437
7:45 AM	0	5	93	0	0	0	0	468	94	0	0	0	0	81	0	0	0	0	144	0	885	3,521
8:00 AM	0	6	100	0	0	0	0	426	121	0	0	1	0	108	0	0	0	0	135	0	895	3,533
8:15 AM	0	3	104	0	0	0	0	420	97	0	0	0	0	80	0	0	0	0	157	0	881	0
8:30 AM	0	10	127	0	0	0	0	393	123	0	0	0	0	65	0	0	0	0	162	0	880	0
8:45 AM	0	7	141	0	0	0	0	412	101	0	0	0	0	81	0	0	0	0	155	0	897	0

Peak Rolling Hour Flow Rates

	Eastbound					Westbound					Northbound					Southbound					
Vehicle Type	U-Turn	Left	Thru	Right	RTOR	U-Turn	Left	Thru	Right	RTOR	U-Turn	Left	Thru	Right	RTOR	U-Turn	Left	Thru	Right	RTOR	Total
Articulated Trucks	0	0	47	0	0	0	0	31	13	0	0	0	0	24	0	0	0	0	6	0	121
Lights	0	25	393	0	0	0	0	1,578	422	0	0	1	0	275	0	0	0	0	563	0	3,257
Mediums	0	1	32	0	0	0	0	42	7	0	0	0	0	33	0	0	0	0	40	0	155
Total	0	26	472	0	0	0	0	1,651	442	0	0	1	0	332	0	0	0	0	609	0	3,533
Bicycles on Crosswalk			0					0					0					0			0
Heavy Vehicle Percentage			16.1%					4.4%					17.1%					7.6%			7.8%
Heavy Vehicle Percentage	0.0%	3.8%	16.7%	0.0%	0.0%	0.0%	0.0%	4.4%	4.5%	0.0%	0.0%	0.0%	0.0%	17.2%	0.0%	0.0%	0.0%	0.0%	7.6%	0.0%	7.8%
Peak Hour Factor (PHF)			0.84					0.91					0.79					0.94			0.98
Peak Hour Factor (PHF)	0.00	0.65	0.84	0.00	0.00	0.00	0.00	0.90	0.81	0.00	0.00	0.25	0.00	0.79	0.00	0.00	0.00	0.00	0.94	0.00	0.98

Traffic Counts by Vehicle Type

	Eastbound					Westbound					Northbound					Southbound					
Time	U-Turn	Left	Thru	Right	RTOR	U-Turn	Left	Thru	Right	RTOR	U-Turn	Left	Thru	Right	RTOR	U-Turn	Left	Thru	Right	RTOR	Total
Articulated Trucks																					
7:00 AM	0	0	1	0	0	0	0	2	1	0	0	0	0	3	0	0	0	0	1	0	8
7:15 AM	0	0	6	0	0	0	0	2	0	0	0	0	0	3	0	0	0	0	0	0	11
7:30 AM	0	0	8	0	0	0	0	5	1	0	0	0	0	6	0	0	0	0	3	0	23
7:45 AM	0	0	12	0	0	0	0	3	2	0	0	0	0	7	0	0	0	0	2	0	26
8:00 AM	0	0	13	0	0	0	0	2	1	0	0	0	0	7	0	0	0	0	1	0	24
8:15 AM	0	0	14	0	0	0	0	8	4	0	0	0	0	7	0	0	0	0	2	0	35
8:30 AM	0	0	12	0	0	0	0	8	5	0	0	0	0	2	0	0	0	0	1	0	28
8:45 AM	0	0	8	0	0	0	0	13	3	0	0	0	0	8	0	0	0	0	2	0	34
Lights																					
7:00 AM	0	4	72	0	0	0	0	496	116	0	0	0	0	60	0	0	0	0	142	0	890
7:15 AM	0	8	78	0	0	0	0	444	134	0	0	0	0	58	0	0	0	0	145	0	867
7:30 AM	0	2	75	0	0	0	0	384	93	0	0	0	0	62	0	0	0	0	135	0	751

RWM

614A

7:45 AM	0	5	79	0	0	0	0	460	89	0	0	0	0	69	0	0	0	0	134	0	836
8:00 AM	0	6	75	0	0	0	0	416	117	0	0	1	0	85	0	0	0	0	126	0	826
8:15 AM	0	3	81	0	0	0	0	400	92	0	0	0	0	67	0	0	0	0	148	0	791
8:30 AM	0	9	108	0	0	0	0	374	116	0	0	0	0	59	0	0	0	0	145	0	811
8:45 AM	0	7	129	0	0	0	0	388	97	0	0	0	0	64	0	0	0	0	144	0	829
Mediums																					
7:00 AM	0	0	5	0	0	0	0	6	3	0	0	0	0	1	0	0	0	0	7	0	22
7:15 AM	0	0	8	0	0	0	0	5	6	0	0	0	0	4	0	0	0	0	4	0	27
7:30 AM	0	0	7	0	0	0	0	8	2	0	0	0	0	2	0	0	0	0	3	0	22
7:45 AM	0	0	2	0	0	0	0	5	3	0	0	0	0	5	0	0	0	0	8	0	23
8:00 AM	0	0	12	0	0	0	0	8	3	0	0	0	0	14	0	0	0	0	8	0	45
8:15 AM	0	0	9	0	0	0	0	12	1	0	0	0	0	6	0	0	0	0	7	0	35
8:30 AM	0	1	7	0	0	0	0	11	2	0	0	0	0	4	0	0	0	0	16	0	41
8:45 AM	0	0	4	0	0	0	0	11	1	0	0	0	0	9	0	0	0	0	9	0	34

Bicycles on Crosswalk

	Eastbound			Westbound			Northbound			Southbound		
Time	CCW	CW	Total	CCW	CW	Total	CCW	CW	Total	CCW	CW	Total
7:00 AM	0	0	0	0	0	0	0	0	0	0	0	0
7:15 AM	0	0	0	0	0	0	0	0	0	0	0	0
7:30 AM	0	0	0	0	0	0	0	0	0	0	0	0
7:45 AM	0	0	0	0	0	0	0	0	0	0	0	0
8:00 AM	0	0	0	0	0	0	0	0	0	0	0	0
8:15 AM	0	0	0	0	0	0	0	0	0	0	0	0
8:30 AM	0	0	0	0	0	0	0	0	0	0	0	0
8:45 AM	0	0	0	0	0	0	0	0	0	0	0	0

Pedestrians

	Eastbound			Westbound			Northbound			Southbound		
Time	CCW	CW	Total	CCW	CW	Total	CCW	CW	Total	CCW	CW	Total
7:00 AM	0	0	0	0	0	0	0	0	0	0	0	0
7:15 AM	0	0	0	0	0	0	0	0	0	0	0	0
7:30 AM	0	0	0	0	0	0	0	0	0	0	0	0
7:45 AM	0	0	0	0	0	0	0	0	0	0	0	0
8:00 AM	0	0	0	0	0	0	0	0	0	0	0	0
8:15 AM	0	0	0	0	0	0	0	0	0	0	0	0
8:30 AM	0	0	0	0	0	0	0	0	0	0	0	0
8:45 AM	0	0	0	0	0	0	0	0	0	0	0	0

City of Renton

Transportation Systems Division
Traffic Operations
2010 Studies

Counter: D4-1028
Counted By: DLS/HVP
Weather: CUMULONIMBUS PANNUS
Other: WET PAVEMENT

File Name : TMC014M
Site Code : 00000014
Start Date : 05/10/2010
Page No : 1

Groups Printed- CARS/PEDESTRIANS - HEAVY VEHICLES

	I-405 NB RAMPS From North					MAPLE VALLEY HY From East					I-405 NB OFF RAMP From South					MAPLE VALLEY HY From West					
Start Time	Right	Thru	Left	Peds	App. Total	Right	Thru	Left	Peds	App. Total	Right	Thru	Left	Peds	App. Total	Right	Thru	Left	Peds	App. Total	Int. Total
11:00	92	0	0	0	92	123	177	0	0	300	56	0	0	0	56	0	135	19	0	154	602
11:15	129	0	0	0	129	102	155	0	0	257	61	0	0	0	61	0	169	29	0	198	645
11:30	99	0	0	0	99	91	168	0	0	259	73	0	0	0	73	0	168	16	0	184	615
11:45	112	0	0	0	112	120	185	0	0	305	69	0	0	0	69	0	159	31	0	190	676
Total	432	0	0	0	432	436	685	0	0	1121	259	0	0	0	259	0	631	95	0	726	2538
12:00	108	0	0	3	111	79	154	0	0	233	72	0	0	0	72	0	181	23	0	204	620
12:15	113	0	0	0	113	86	170	0	0	256	93	0	0	0	93	0	193	33	0	226	688
12:30	129	0	0	1	130	107	150	0	0	257	74	0	0	0	74	0	179	25	0	204	665
12:45	123	0	0	5	128	95	163	0	0	258	69	0	0	2	71	0	188	25	0	213	670
Total	473	0	0	9	482	367	637	0	0	1004	308	0	0	2	310	0	741	106	0	847	2643
Grand Total	905	0	0	9	914	803	1322	0	0	2125	567	0	0	2	569	0	1372	201	0	1573	5181
Apprch %	99	0	0	1		37.8	62.2	0	0		99.6	0	0	0.4		0	87.2	12.8	0		
Total %	17.5	0	0	0.2	17.6	15.5	25.5	0	0	41	10.9	0	0	0	11	0	26.5	3.9	0	30.4	
CARS/PEDESTRIANS	877	0	0	8	885	744	1226	0	0	1970	517	0	0	2	519	0	1266	196	0	1462	4836
% CARS/PEDESTRIANS	96.9	0	0	88.9	96.8	92.7	92.7	0	0	92.7	91.2	0	0	100	91.2	0	92.3	97.5	0	92.9	93.3
HEAVY VEHICLES	28	0	0	1	29	59	96	0	0	155	50	0	0	0	50	0	106	5	0	111	345
% HEAVY VEHICLES	3.1	0	0	11.1	3.2	7.3	7.3	0	0	7.3	8.8	0	0	0	8.8	0	7.7	2.5	0	7.1	6.7

	I-405 NB RAMPS From North					MAPLE VALLEY HY From East					I-405 NB OFF RAMP From South					MAPLE VALLEY HY From West					
Start Time	Right	Thru	Left	Peds	App. Total	Right	Thru	Left	Peds	App. Total	Right	Thru	Left	Peds	App. Total	Right	Thru	Left	Peds	App. Total	Int. Total
Peak Hour Analysis From 11:00 to 12:45 - Peak 1 of 1																					
Peak Hour for Entire Intersection Begins at 11:45																					
11:45	112	0	0	0	112	120	185	0	0	305	69	0	0	0	69	0	159	31	0	190	676
12:00	108	0	0	3	111	79	154	0	0	233	72	0	0	0	72	0	181	23	0	204	620
12:15	113	0	0	0	113	86	170	0	0	256	93	0	0	0	93	0	193	33	0	226	688
12:30	129	0	0	1	130	107	150	0	0	257	74	0	0	0	74	0	179	25	0	204	665
Total Volume	462	0	0	4	466	392	659	0	0	1051	308	0	0	0	308	0	712	112	0	824	2649
% App. Total	99.1	0	0	0.9		37.3	62.7	0	0		100	0	0	0		0	86.4	13.6	0		
PHF	.895	.000	.000	.333	.896	.817	.891	.000	.000	.861	.828	.000	.000	.000	.828	.000	.922	.848	.000	.912	.963

014M

City of Renton

Transportation Systems Division
Traffic Operations
2010 Studies

Counter: D4-1028
Counted By: DLS/HVP
Weather: CUMULONIMBUS PANNUS
Other: WET PAVEMENT

File Name : TMC014M
Site Code : 00000014
Start Date : 05/10/2010
Page No : 2

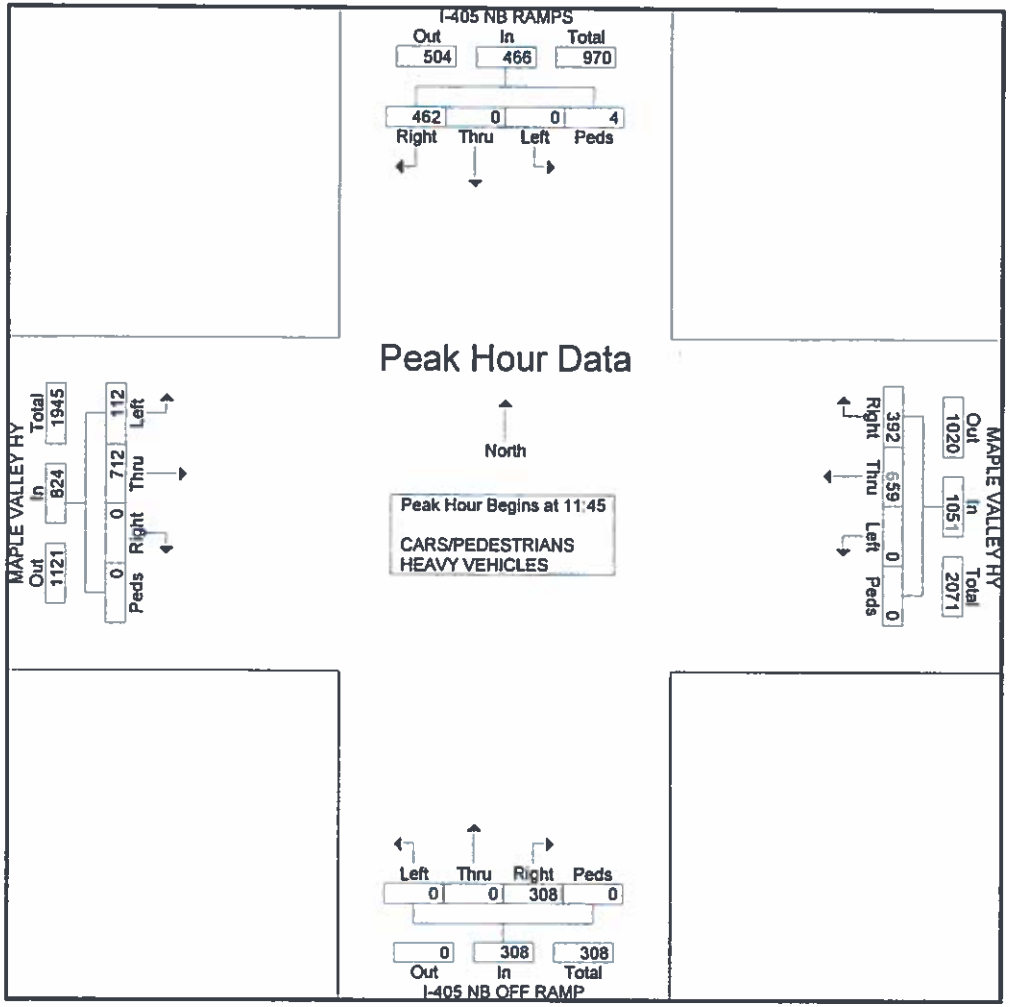

All Traffic Data Services

A-15 I-405 NB OFF RAMP & SR 169 PM
Wednesday, July 13, 2016

Peak Hour
05:00 PM - 06:00 PM
Peak 15-Minutes
05:15 PM - 05:30 PM

Traffic Counts - All Vehicles

	SR 169					SR 169					I-405 NB OFF RAMP					I-405 NB RAMPS						
	Eastbound					Westbound					Northbound					Southbound						
Time	U-Turn	Left	Thru	Right	RTOR	U-Turn	Left	Thru	Right	RTOR	U-Turn	Left	Thru	Right	RTOR	U-Turn	Left	Thru	Right	RTOR	Total	Rolling Hour
4:00 PM	0	34	407	0	0	0	0	191	67	0	0	0	0	0	0	0	0	0	0	0	699	3,251
4:15 PM	0	68	392	0	0	0	0	148	77	0	0	0	0	0	0	0	0	0	1	0	686	3,535
4:30 PM	0	54	420	0	0	0	0	209	61	0	0	0	0	82	0	0	0	0	99	0	925	3,869
4:45 PM	0	58	335	0	0	0	0	179	83	0	0	0	0	111	0	0	0	0	175	0	941	3,930
5:00 PM	0	25	419	0	0	0	0	206	72	0	0	0	0	130	0	0	0	0	131	0	983	3,957
5:15 PM	0	21	391	0	0	0	0	204	69	0	0	0	0	174	0	0	0	0	161	0	1,020	0
5:30 PM	0	17	416	0	0	0	0	187	72	0	0	0	0	147	0	0	0	0	147	0	986	0
5:45 PM	0	15	361	0	0	0	0	200	63	0	0	0	0	164	0	0	0	0	165	0	968	0

Peak Rolling Hour Flow Rates

	Eastbound					Westbound					Northbound					Southbound					
Vehicle Type	U-Turn	Left	Thru	Right	RTOR	U-Turn	Left	Thru	Right	RTOR	U-Turn	Left	Thru	Right	RTOR	U-Turn	Left	Thru	Right	RTOR	Total
Articulated Trucks	0	0	12	0	0	0	0	2	0	0	0	0	0	2	0	0	0	0	2	0	18
Lights	0	77	1,563	0	0	0	0	781	272	0	0	0	0	608	0	0	0	0	594	0	3,895
Mediums	0	1	12	0	0	0	0	14	4	0	0	0	0	5	0	0	0	0	8	0	44
Total	0	78	1,587	0	0	0	0	797	276	0	0	0	0	615	0	0	0	0	604	0	3,957
Bicycles on Crosswalk			0					0					0					0			0
Heavy Vehicle Percentage			1.5%					1.9%					1.1%					1.7%			1.6%
Heavy Vehicle Percentage	0.0%	1.3%	1.5%	0.0%	0.0%	0.0%	0.0%	2.0%	1.4%	0.0%	0.0%	0.0%	0.0%	1.1%	0.0%	0.0%	0.0%	0.0%	1.7%	0.0%	1.6%
Peak Hour Factor (PHF)			0.93					0.97					0.88					0.88			0.97
Peak Hour Factor (PHF)	0.00	0.79	0.95	0.00	0.00	0.00	0.00	0.95	0.89	0.00	0.00	0.00	0.00	0.88	0.00	0.00	0.00	0.00	0.88	0.00	0.97

Rwm

Traffic Counts by Vehicle Type

	Eastbound					Westbound					Northbound					Southbound					
Time	U-Turn	Left	Thru	Right	RTOR	U-Turn	Left	Thru	Right	RTOR	U-Turn	Left	Thru	Right	RTOR	U-Turn	Left	Thru	Right	RTOR	Total
Articulated Trucks																					
4:00 PM	0	0	0	0	0	0	0	1	0	0	0	0	0	0	0	0	0	0	0	0	1
4:15 PM	0	1	5	0	0	0	0	1	0	0	0	0	0	0	0	0	0	0	0	0	7
4:30 PM	0	1	1	0	0	0	0	2	0	0	0	0	0	5	0	0	0	0	0	0	9
4:45 PM	0	1	0	0	0	0	0	2	0	0	0	0	0	2	0	0	0	0	1	0	6
5:00 PM	0	0	2	0	0	0	0	0	0	0	0	0	0	0	0	0	0	0	1	0	3
5:15 PM	0	0	5	0	0	0	0	0	0	0	0	0	0	1	0	0	0	0	1	0	7
5:30 PM	0	0	3	0	0	0	0	0	0	0	0	0	0	1	0	0	0	0	0	0	4
5:45 PM	0	0	2	0	0	0	0	2	0	0	0	0	0	0	0	0	0	0	0	0	4
Lights																					
4:00 PM	0	34	402	0	0	0	0	186	65	0	0	0	0	0	0	0	0	0	0	0	687
4:15 PM	0	66	383	0	0	0	0	144	75	0	0	0	0	0	0	0	0	0	1	0	669
4:30 PM	0	53	412	0	0	0	0	204	58	0	0	0	0	77	0	0	0	0	96	0	900

014 p

4:45 PM	0	56	333	0	0	0	0	175	83	0	0	0	0	107	0	0	0	0	173	0	927
5:00 PM	0	25	411	0	0	0	0	202	72	0	0	0	0	128	0	0	0	0	130	0	968
5:15 PM	0	21	385	0	0	0	0	200	68	0	0	0	0	171	0	0	0	0	156	0	1001
5:30 PM	0	16	411	0	0	0	0	186	70	0	0	0	0	146	0	0	0	0	146	0	975
5:45 PM	0	15	356	0	0	0	0	193	62	0	0	0	0	163	0	0	0	0	162	0	951
Mediums																					
4:00 PM	0	0	5	0	0	0	0	4	2	0	0	0	0	0	0	0	0	0	0	0	11
4:15 PM	0	1	4	0	0	0	0	3	2	0	0	0	0	0	0	0	0	0	0	0	10
4:30 PM	0	0	7	0	0	0	0	3	3	0	0	0	0	0	0	0	0	0	3	0	16
4:45 PM	0	1	2	0	0	0	0	2	0	0	0	0	0	2	0	0	0	0	1	0	8
5:00 PM	0	0	6	0	0	0	0	4	0	0	0	0	0	2	0	0	0	0	0	0	12
5:15 PM	0	0	1	0	0	0	0	4	1	0	0	0	0	2	0	0	0	0	4	0	12
5:30 PM	0	1	2	0	0	0	0	1	2	0	0	0	0	0	0	0	0	0	1	0	7
5:45 PM	0	0	3	0	0	0	0	5	1	0	0	0	0	1	0	0	0	0	3	0	13

Bicycles on Crosswalk

	Eastbound			Westbound			Northbound			Southbound		
Time	CCW	CW	Total	CCW	CW	Total	CCW	CW	Total	CCW	CW	Total
4:00 PM	0	0	0	0	0	0	0	0	0	0	0	0
4:15 PM	0	0	0	0	0	0	0	0	0	0	0	0
4:30 PM	0	0	0	0	0	0	0	0	0	0	0	0
4:45 PM	0	0	0	0	0	0	0	0	0	0	0	0
5:00 PM	0	0	0	0	0	0	0	0	0	0	0	0
5:15 PM	0	0	0	0	0	0	0	0	0	0	0	0
5:30 PM	0	0	0	0	0	0	0	0	0	0	0	0
5:45 PM	0	0	0	0	0	0	0	0	0	0	0	0

Pedestrians

	Eastbound			Westbound			Northbound			Southbound		
Time	CCW	CW	Total	CCW	CW	Total	CCW	CW	Total	CCW	CW	Total
4:00 PM	0	0	0	0	0	0	0	1	1	0	0	0
4:15 PM	0	0	0	0	0	0	0	0	0	0	0	0
4:30 PM	0	0	0	0	0	0	0	0	0	1	1	2
4:45 PM	0	0	0	0	0	0	0	0	0	1	0	1
5:00 PM	0	0	0	0	0	0	0	0	0	0	0	0
5:15 PM	0	0	0	0	0	0	0	0	0	0	0	0
5:30 PM	0	0	0	0	0	0	0	0	0	0	0	0
5:45 PM	0	0	0	0	0	0	0	0	0	0	0	0

036A

All Traffic Data Services Inc.

(303) 216-2439
www.alltrafficdata.net

Location: 36 SUNSET BLVD N & BRONSON WAY N AM
Date and Start Time: Thursday, March 22, 2018
Peak Hour: 07:45 AM - 08:45 AM
Peak 15-Minutes: 07:45 AM - 08:00 AM

RWM

Peak Hour

All Vehicles

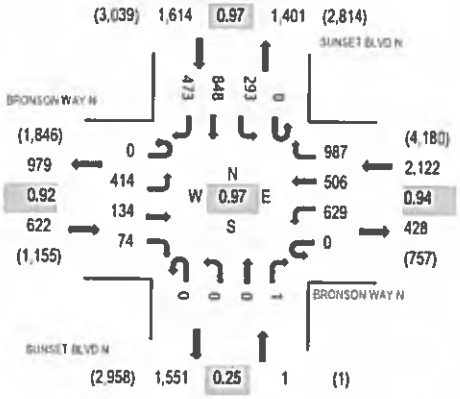

Note: Total study counts contained in parentheses.

	HV%	PHF
EB	4.7%	0.92
WB	4.7%	0.94
NB	0.0%	0.25
SB	5.1%	0.97
All	4.8%	0.97

Heavy Vehicles

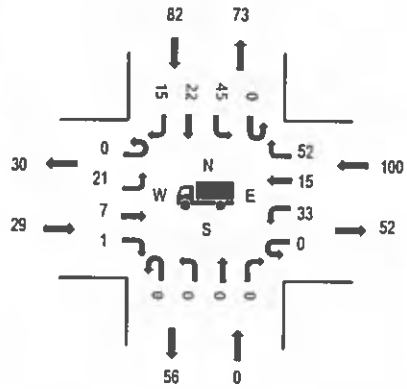

Pedestrians/Bicycles in Crosswalk

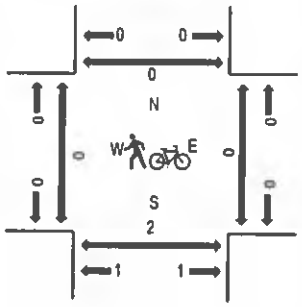

Traffic Counts - All Vehicles

Interval Start Time	BRONSON WAY N Eastbound U-Turn	Left	Thru	Right	BRONSON WAY N Westbound U-Turn	Left	Thru	Right	SUNSET BLVD N Northbound U-Turn	Left	Thru	Right	SUNSET BLVD N Southbound U-Turn	Left	Thru	Right	Total	Rolling Hour
7:00 AM	0	113	15	7	0	165	121	270	0	0	0	0	0	42	202	94	1,029	4,112
7:15 AM	0	111	24	14	0	126	120	240	0	0	0	0	0	63	213	93	1,004	4,107
7:30 AM	0	94	20	10	0	153	86	247	0	0	0	0	0	74	158	115	957	4,212
7:45 AM	0	96	33	20	0	166	147	249	0	0	0	0	0	75	212	122	1,122	4,359
8:00 AM	0	115	33	21	0	145	106	220	0	0	0	1	0	76	199	108	1,024	4,263
8:15 AM	0	107	28	15	0	150	119	272	0	0	0	0	0	70	244	104	1,109	
8:30 AM	0	96	40	18	0	166	134	246	0	0	0	0	0	72	193	139	1,104	
8:45 AM	0	97	16	12	0	172	117	241	0	0	0	0	0	75	175	121	1,026	
Count Total	0	829	209	117	0	1,245	950	1,985	0	0	0	1	0	547	1,596	896	8,375	
Peak Hour	0	414	134	74	0	629	506	987	0	0	0	1	0	293	848	473	4,359	

Traffic Counts - Heavy Vehicles and Pedestrians/Bicycles in Crosswalk

Interval Start Time	Heavy Vehicles EB	NB	WB	SB	Total	Interval Start Time	Pedestrians/Bicycles on Crosswalk EB	NB	WB	SB	Total
7:00 AM	9	0	26	9	44	7:00 AM	0	0	0	0	0
7:15 AM	8	0	17	15	40	7:15 AM	0	0	0	0	0
7:30 AM	5	0	20	25	50	7:30 AM	0	0	0	0	0
7:45 AM	6	0	25	19	52	7:45 AM	0	0	0	0	0
8:00 AM	5	0	24	16	45	8:00 AM	0	0	0	0	0
8:15 AM	8	0	21	24	53	8:15 AM	0	0	0	0	0
8:30 AM	8	0	30	23	61	8:30 AM	0	2	0	0	2
8:45 AM	6	0	17	25	48	8:45 AM	0	0	0	0	0
Count Total	57	0	180	156	393	Count Total	0	2	0	0	2
Peak Hour	29	0	100	82	211	Peak Hour	0	2	0	0	2

03 6M

All Traffic Data Services Inc.

(303) 216-2439
www.alltrafficdata.net

Location: 10 SUNSET BLVD N & BRONSON WAY N Noon
Date and Start Time: Thursday, March 22, 2018
Peak Hour: 11:30 AM - 12:30 PM
Peak 15-Minutes: 11:45 AM - 12:00 PM

RWM

Peak Hour

All Vehicles

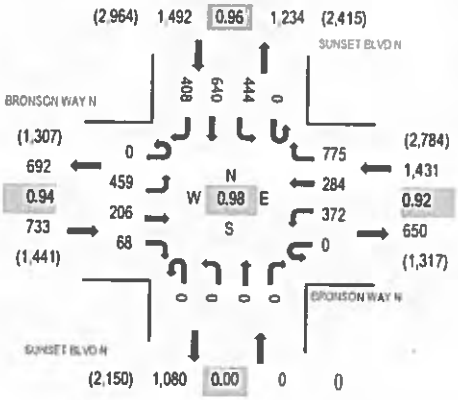

Note: Total study counts contained in parentheses.

Heavy Vehicles

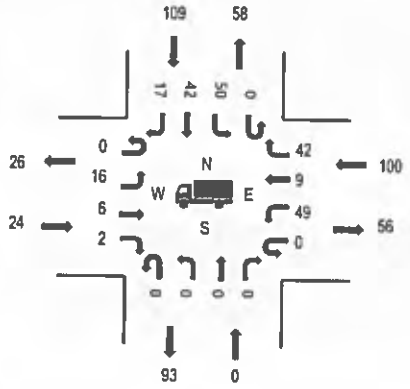

Pedestrians/Bicycles in Crosswalk

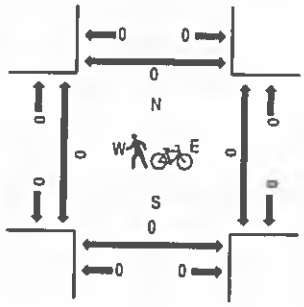

	HV%	PHF
EB	3.3%	0.94
WB	7.0%	0.92
NB	0.0%	0.00
SB	7.3%	0.96
All	6.4%	0.98

Traffic Counts - All Vehicles

Interval Start Time	BRONSON WAY N Eastbound				BRONSON WAY N Westbound				SUNSET BLVD N Northbound				SUNSET BLVD N Southbound				Total	Rolling Hour
	U-Turn	Left	Thru	Right	U-Turn	Left	Thru	Right	U-Turn	Left	Thru	Right	U-Turn	Left	Thru	Right		
11:00 AM	0	114	53	13	0	98	62	166	0	0	0	0	0	117	164	97	884	3,583
11:15 AM	0	133	54	16	0	88	62	167	0	0	0	0	0	108	134	90	852	3,603
11:30 AM	0	127	52	14	0	67	55	188	0	0	0	0	0	120	182	114	919	3,656
11:45 AM	0	127	43	18	0	103	82	200	0	0	0	0	0	107	143	95	928	3,610
12:00 PM	0	109	51	20	0	80	63	211	0	0	0	0	0	121	158	91	904	3,606
12:15 PM	0	96	60	16	0	122	74	176	0	0	0	0	0	96	157	108	905	
12:30 PM	0	99	42	22	0	93	44	198	0	0	0	0	0	122	165	88	873	
12:45 PM	0	99	42	21	0	107	63	205	0	0	0	0	0	129	149	109	924	
Count Total	0	904	397	140	0	758	515	1,511	0	0	0	0	0	920	1,252	792	7,189	
Peak Hour	0	459	206	68	0	372	284	775	0	0	0	0	0	444	640	408	3,656	

Traffic Counts - Heavy Vehicles and Pedestrians/Bicycles in Crosswalk

Interval Start Time	Heavy Vehicles					Interval Start Time	Pedestrians/Bicycles on Crosswalk				
	EB	NB	WB	SB	Total		EB	NB	WB	SB	Total
11:00 AM	4	0	26	24	54	11:00 AM	0	0	0	0	0
11:15 AM	8	0	22	32	62	11:15 AM	0	0	0	0	0
11:30 AM	7	0	25	32	64	11:30 AM	0	0	0	0	0
11:45 AM	6	0	24	25	55	11:45 AM	0	0	0	0	0
12:00 PM	6	0	28	22	56	12:00 PM	0	0	0	0	0
12:15 PM	5	0	23	30	58	12:15 PM	0	0	0	0	0
12:30 PM	10	0	19	32	61	12:30 PM	0	0	0	0	0
12:45 PM	9	0	18	22	49	12:45 PM	0	0	0	0	0
Count Total	55	0	185	219	459	Count Total	0	0	0	0	0
Peak Hour	24	0	100	109	233	Peak Hour	0	0	0	0	0

036 P

All Traffic Data Services Inc.

(303) 216-2439
www.alltrafficdata.net

Location: 10 SUNSET BLVD N & BRONSON WAY N PM
Date and Start Time: Thursday, March 22, 2018
Peak Hour: 04:30 PM - 05:30 PM
Peak 15-Minutes: 05:15 PM - 05:30 PM RWM

Peak Hour

All Vehicles

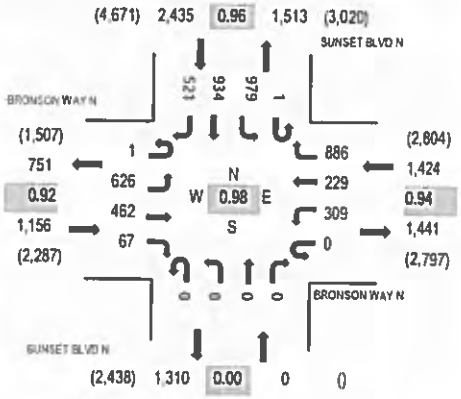

Note: Total study counts contained in parentheses.

Heavy Vehicles

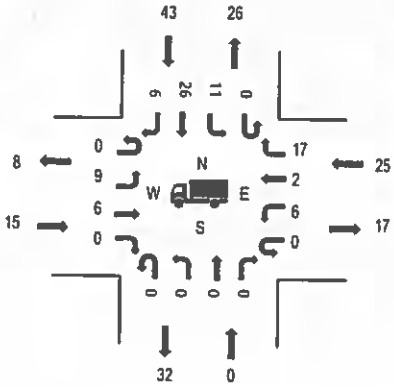

Pedestrians/Bicycles in Crosswalk

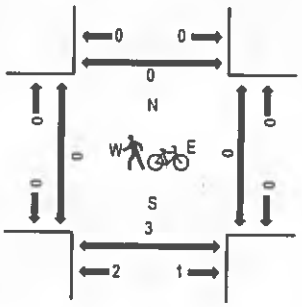

	HV%	PHF
EB	1.3%	0.92
WB	1.8%	0.94
NB	0.0%	0.00
SB	1.8%	0.96
All	1.7%	0.98

Traffic Counts - All Vehicles

Interval Start Time	BRONSON WAY N Eastbound				BRONSON WAY N Westbound				SUNSET BLVD N Northbound				SUNSET BLVD N Southbound				Total	Rolling Hour
	U-Turn	Left	Thru	Right	U-Turn	Left	Thru	Right	U-Turn	Left	Thru	Right	U-Turn	Left	Thru	Right		
4:00 PM	0	117	104	15	0	61	41	225	0	0	0	0	0	208	212	129	1,112	4,803
4:15 PM	0	182	127	14	0	85	68	199	0	0	0	0	0	208	196	126	1,205	4,945
4:30 PM	0	149	118	18	0	75	49	230	0	0	0	0	0	239	248	136	1,262	5,015
4:45 PM	0	158	108	20	0	76	65	199	0	0	0	0	0	232	226	140	1,224	4,975
5:00 PM	0	163	121	13	0	88	65	227	0	0	0	0	1	237	225	114	1,254	4,959
5:15 PM	1	156	115	16	0	70	50	230	0	0	0	0	0	271	235	131	1,275	
5:30 PM	0	168	126	12	0	67	49	231	0	0	0	0	0	233	190	146	1,222	
5:45 PM	0	166	92	8	0	71	64	219	0	0	0	0	0	258	197	133	1,208	
Count Total	1	1,259	911	116	0	593	451	1,760	0	0	0	0	1	1,886	1,729	1,055	9,762	
Peak Hour	1	626	462	67	0	309	229	886	0	0	0	0	1	979	934	521	5,015	

Traffic Counts - Heavy Vehicles and Pedestrians/Bicycles in Crosswalk

Interval Start Time	Heavy Vehicles					Interval Start Time	Pedestrians/Bicycles on Crosswalk				
	EB	NB	WB	SB	Total		EB	NB	WB	SB	Total
4:00 PM	1	0	8	5	14	4:00 PM	0	0	0	0	0
4:15 PM	4	0	9	8	21	4:15 PM	0	0	0	0	0
4:30 PM	2	0	6	11	19	4:30 PM	0	1	0	0	1
4:45 PM	8	0	3	12	23	4:45 PM	0	0	0	0	0
5:00 PM	3	0	10	8	21	5:00 PM	0	2	0	0	2
5:15 PM	2	0	6	12	20	5:15 PM	0	0	0	0	0
5:30 PM	3	0	9	15	27	5:30 PM	0	0	0	0	0
5:45 PM	3	0	2	9	14	5:45 PM	0	0	0	0	0
Count Total	26	0	53	80	159	Count Total	0	3	0	0	3
Peak Hour	15	0	25	43	83	Peak Hour	0	3	0	0	3

037A

All Traffic Data Services Inc.

(303) 216-2439
www.alltrafficdata.net

Location: TMC 037A SUNSET BLVD N & N 3RD ST AM
Date and Start Time: Wednesday, March 23, 2016
Peak Hour: 07:15 AM - 08:15 AM
Peak 15-Minutes: 07:30 AM - 07:45 AM

RWM

Peak Hour

All Vehicles

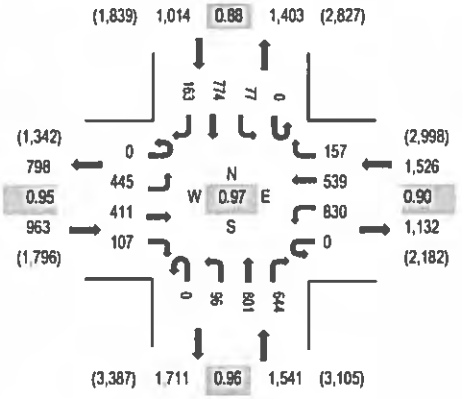

Note: Total study counts contained in parentheses.

	HV%	PHF
EB	3.5%	0.95
WB	2.6%	0.90
NB	4.7%	0.96
SB	6.3%	0.88
All	4.2%	0.97

Heavy Vehicles

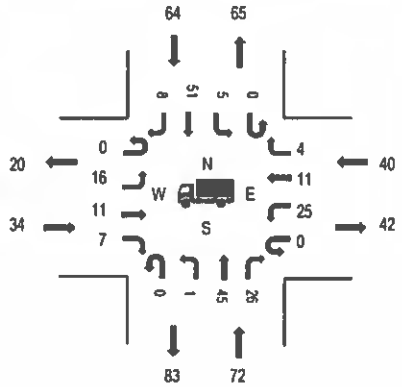

Pedestrians/Bicycles in Crosswalk

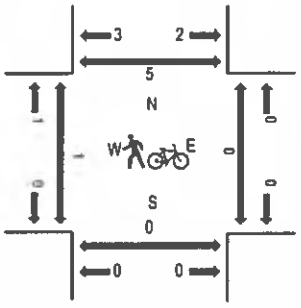

Traffic Counts - All Vehicles

Interval Start Time	N 3RD ST Eastbound				N 3RD ST Westbound				SUNSET BLVD N Northbound				SUNSET BLVD N Southbound				Total	Rolling Hour
	U-Turn	Left	Thru	Right	U-Turn	Left	Thru	Right	U-Turn	Left	Thru	Right	U-Turn	Left	Thru	Right		
7:00:00 AM	0	85	58	19	0	241	110	48	0	20	215	170	0	22	147	34	1,169	5,015
7:15:00 AM	0	113	96	22	0	235	144	45	0	24	193	158	0	27	181	35	1,273	5,044
7:30:00 AM	0	132	86	26	0	191	155	35	0	19	215	167	0	15	212	45	1,298	5,012
7:45:00 AM	0	94	115	26	0	194	138	35	0	22	200	163	0	15	219	54	1,275	4,884
8:00:00 AM	0	106	114	33	0	210	102	42	0	31	193	156	0	20	162	29	1,198	4,723
8:15:00 AM	0	101	111	32	0	249	97	42	0	14	212	166	0	13	173	31	1,241	
8:30:00 AM	0	131	80	24	0	232	83	41	0	17	194	156	0	17	167	28	1,170	
8:45:00 AM	0	91	76	25	0	223	57	49	0	26	215	159	0	22	144	27	1,114	
Count Total	0	853	736	207	0	1,775	886	337	0	173	1,637	1,295	0	151	1,405	283	9,738	
Peak Hour	0	445	411	107	0	830	539	157	0	96	801	644	0	77	774	163	5,044	

Traffic Counts - Heavy Vehicles and Pedestrians/Bicycles in Crosswalk

Interval Start Time	Heavy Vehicle Totals					Pedestrians/Bikes in Crosswalk				
	EB	WB	NB	SB	Total	West	East	South	North	Total
7:00:00 AM	12	4	21	11	48	0	0	0	1	1
7:15:00 AM	6	6	17	19	48	1	0	0	3	4
7:30:00 AM	11	11	16	16	54	0	0	0	0	0
7:45:00 AM	8	13	20	14	55	0	0	0	2	2
8:00:00 AM	9	10	19	15	53	0	0	0	0	0
8:15:00 AM	10	9	12	11	42	2	0	1	1	4
8:30:00 AM	9	9	28	14	60	2	0	0	0	2
8:45:00 AM	7	12	19	17	55	0	0	0	2	2
Count Total	72	74	152	117	415	5	0	1	9	15
Peak Hour	34	40	72	64	210	1	0	0	5	6

037N

All Traffic Data Services Inc.

(303) 216-2439
www.alltrafficdata.net

Location: 37 SUNSET BLVD N & N 3RD ST Noon
Date and Start Time: Thursday, March 22, 2018
Peak Hour: 11:30 AM - 12:30 PM
Peak 15-Minutes: 12:00 PM - 12:15 PM

RWM

Peak Hour

All Vehicles

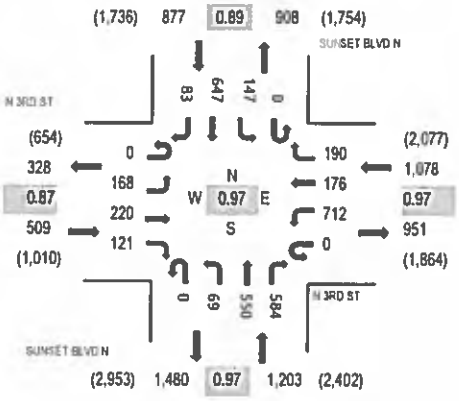

Note: Total study counts contained in parentheses.

	HV%	PHF
EB	2.9%	0.87
WB	3.2%	0.97
NB	4.3%	0.97
SB	9.1%	0.89
All	5.0%	0.97

Heavy Vehicles

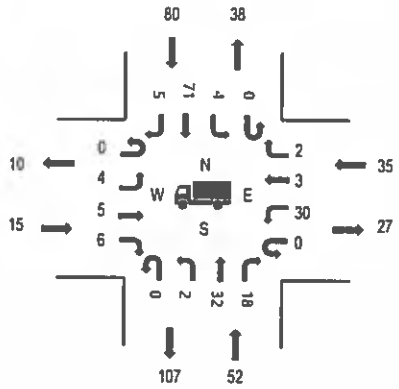

Pedestrians/Bicycles in Crosswalk

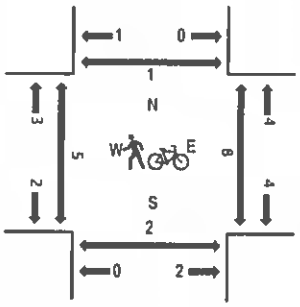

Traffic Counts - All Vehicles

Interval Start Time	N 3RD ST Eastbound				N 3RD ST Westbound				SUNSET BLVD N Northbound				SUNSET BLVD N Southbound				Total	Rolling Hour
	U-Turn	Left	Thru	Right	U-Turn	Left	Thru	Right	U-Turn	Left	Thru	Right	U-Turn	Left	Thru	Right		
11:00 AM	0	38	61	29	0	171	54	37	0	8	136	140	0	22	146	15	857	3,559
11:15 AM	0	26	49	32	0	164	33	28	0	10	148	155	0	34	175	17	871	3,651
11:30 AM	0	42	52	25	0	183	44	51	0	16	117	158	0	27	170	21	906	3,667
11:45 AM	0	45	39	30	0	176	40	50	0	21	163	139	0	45	162	15	925	3,650
12:00 PM	0	44	75	37	0	182	50	38	0	16	140	164	0	34	145	24	949	3,666
12:15 PM	0	37	54	29	0	171	42	51	0	16	130	123	0	41	170	23	887	
12:30 PM	0	51	57	34	0	166	49	41	0	20	126	143	0	32	138	32	889	
12:45 PM	0	31	50	43	0	172	38	46	0	31	138	144	0	26	203	19	941	
Count Total	0	314	437	259	0	1,385	350	342	0	138	1,098	1,166	0	261	1,309	166	7,225	
Peak Hour	0	168	220	121	0	712	176	190	0	69	550	584	0	147	647	83	3,667	

Traffic Counts - Heavy Vehicles and Pedestrians/Bicycles in Crosswalk

Interval Start Time	Heavy Vehicles					Interval Start Time	Pedestrians/Bicycles on Crosswalk				
	EB	NB	WB	SB	Total		EB	NB	WB	SB	Total
11:00 AM	3	10	8	18	39	11:00 AM	0	2	1	0	3
11:15 AM	2	13	11	27	53	11:15 AM	1	0	0	2	3
11:30 AM	1	12	5	23	41	11:30 AM	1	0	0	1	2
11:45 AM	3	15	12	15	45	11:45 AM	2	1	6	0	9
12:00 PM	6	14	8	18	46	12:00 PM	2	0	2	0	4
12:15 PM	5	11	10	24	50	12:15 PM	0	1	0	0	1
12:30 PM	7	16	14	27	64	12:30 PM	0	0	0	2	2
12:45 PM	5	9	7	23	44	12:45 PM	0	1	3	0	4
Count Total	32	100	75	175	382	Count Total	6	5	12	5	28
Peak Hour	15	52	35	80	182	Peak Hour	5	2	8	1	16

037 P

All Traffic Data Services Inc.

(303) 216-2439
www.alltrafficdata.net

Location: 37 SUNSET BLVD N & N 3RD ST PM
Date and Start Time: Thursday, March 22, 2018
Peak Hour: 05:00 PM - 06:00 PM
Peak 15-Minutes: 05:30 PM - 05:45 PM

RWM

Peak Hour

All Vehicles

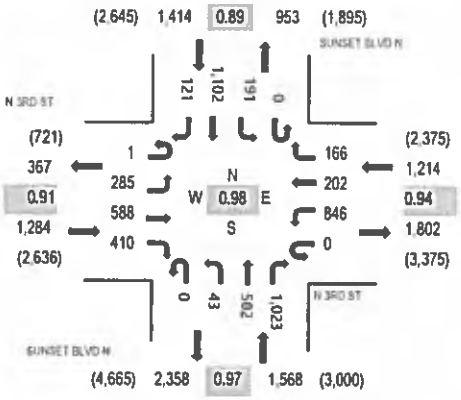

Heavy Vehicles

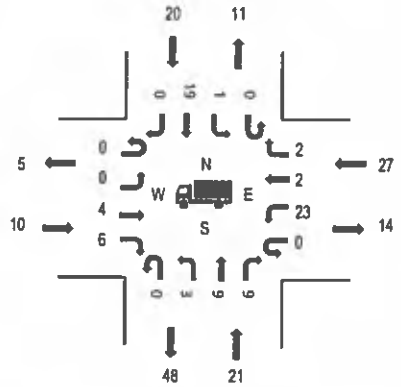

Pedestrians/Bicycles in Crosswalk

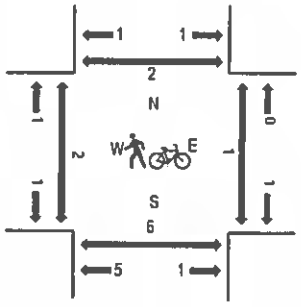

Note: Total study counts contained in parentheses.

	HV%	PHF
EB	0.8%	0.91
WB	2.2%	0.94
NB	1.3%	0.97
SB	1.4%	0.89
All	1.4%	0.98

Traffic Counts - All Vehicles

Interval Start Time	N 3RD ST Eastbound				N 3RD ST Westbound				SUNSET BLVD N Northbound				SUNSET BLVD N Southbound				Total	Rolling Hour
	U-Turn	Left	Thru	Right	U-Turn	Left	Thru	Right	U-Turn	Left	Thru	Right	U-Turn	Left	Thru	Right		
4:00 PM	0	59	129	117	0	210	48	39	0	10	106	216	0	26	214	28	1,202	5,176
4:15 PM	0	77	144	129	0	177	48	39	0	12	143	227	0	29	253	17	1,295	5,354
4:30 PM	0	74	134	112	0	225	59	36	0	14	134	236	0	33	289	35	1,381	5,434
4:45 PM	0	91	154	132	0	204	46	30	0	11	114	209	0	36	245	26	1,298	5,444
5:00 PM	0	72	141	104	0	180	52	35	0	9	136	256	0	46	320	29	1,380	5,480
5:15 PM	0	67	169	116	0	226	48	39	0	13	111	254	0	39	268	25	1,375	
5:30 PM	0	69	135	101	0	210	51	49	0	12	132	260	0	58	278	35	1,391	
5:45 PM	1	77	142	89	0	230	51	43	0	9	123	253	0	48	236	32	1,334	
Count Total	1	586	1,149	900	0	1,662	403	310	0	90	999	1,911	0	315	2,103	227	10,656	
Peak Hour	1	285	588	410	0	846	202	166	0	43	502	1,023	0	191	1,102	121	5,480	

Traffic Counts - Heavy Vehicles and Pedestrians/Bicycles in Crosswalk

Interval Start Time	Heavy Vehicles					Interval Start Time	Pedestrians/Bicycles on Crosswalk				
	EB	NB	WB	SB	Total		EB	NB	WB	SB	Total
4:00 PM	1	5	7	6	19	4:00 PM	1	1	0	0	2
4:15 PM	3	5	7	9	24	4:15 PM	1	0	0	0	1
4:30 PM	3	5	9	6	23	4:30 PM	2	0	0	2	4
4:45 PM	1	5	5	7	18	4:45 PM	0	0	0	3	3
5:00 PM	3	10	9	2	24	5:00 PM	0	0	0	0	0
5:15 PM	1	4	6	5	16	5:15 PM	0	1	1	0	2
5:30 PM	5	4	7	8	24	5:30 PM	1	0	0	1	2
5:45 PM	1	3	5	5	14	5:45 PM	1	5	0	1	7
Count Total	18	41	55	48	162	Count Total	6	7	1	7	21
Peak Hour	10	21	27	20	78	Peak Hour	2	6	1	2	11

066A

All Traffic Data Services Inc.

(303) 216-2439
www.alltrafficdata.net

Location: 66 MONTEREY DR NE & NE 3RD ST AM
Date and Start Time: Thursday, March 22, 2018
Peak Hour: 07:30 AM - 08:30 AM
Peak 15-Minutes: 08:00 AM - 08:15 AM

RWM

Peak Hour

All Vehicles

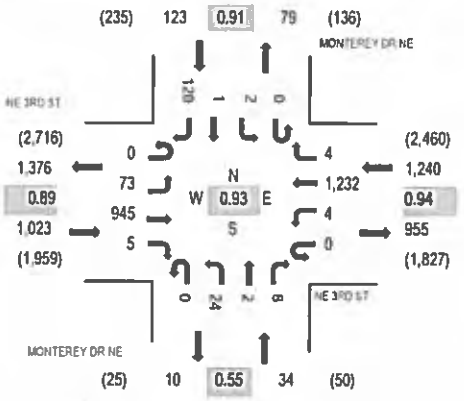

Heavy Vehicles

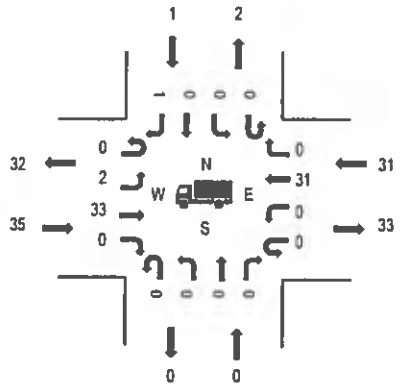

Pedestrians/Bicycles in Crosswalk

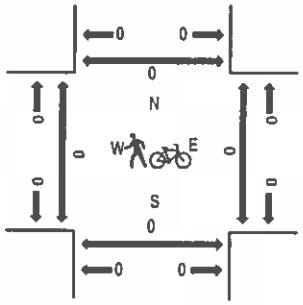

Note: Total study counts contained in parentheses.

	HV%	PHF
EB	3.4%	0.89
WB	2.5%	0.94
NB	0.0%	0.55
SB	0.8%	0.91
All	2.8%	0.93

Traffic Counts - All Vehicles

Interval Start Time	NE 3RD ST Eastbound				NE 3RD ST Westbound				MONTEREY DR NE Northbound				MONTEREY DR NE Southbound				Total	Rolling Hour
	U-Turn	Left	Thru	Right	U-Turn	Left	Thru	Right	U-Turn	Left	Thru	Right	U-Turn	Left	Thru	Right		
7:00 AM	0	10	245	2	0	0	323	0	0	2	0	1	0	0	0	27	610	2,318
7:15 AM	0	10	205	3	0	0	304	0	0	3	1	0	0	0	0	21	547	2,360
7:30 AM	0	14	249	1	0	0	298	2	0	4	0	1	0	2	0	31	602	2,420
7:45 AM	0	22	219	1	0	0	282	0	0	3	0	0	0	0	0	32	559	2,392
8:00 AM	0	20	256	1	0	3	320	2	0	10	0	6	0	0	0	24	652	2,386
8:15 AM	0	17	211	2	0	1	332	0	0	7	2	1	0	0	1	33	607	
8:30 AM	0	13	211	2	0	0	309	1	0	3	1	0	0	0	2	32	574	
8:45 AM	0	21	208	6	0	0	283	0	0	3	0	2	0	0	0	30	553	
Count Total	0	127	1,814	18	0	4	2,451	5	0	35	4	11	0	2	3	230	4,704	
Peak Hour	0	73	945	5	0	4	1,232	4	0	24	2	8	0	2	1	120	2,420	

Traffic Counts - Heavy Vehicles and Pedestrians/Bicycles in Crosswalk

Interval Start Time	Heavy Vehicles					Interval Start Time	Pedestrians/Bicycles on Crosswalk				
	EB	NB	WB	SB	Total		EB	NB	WB	SB	Total
7:00 AM	15	0	7	0	22	7:00 AM	0	0	0	0	0
7:15 AM	11	0	9	0	20	7:15 AM	0	0	0	1	1
7:30 AM	5	0	9	0	14	7:30 AM	0	0	0	0	0
7:45 AM	9	0	5	1	15	7:45 AM	0	0	0	0	0
8:00 AM	12	0	9	0	21	8:00 AM	0	0	0	0	0
8:15 AM	9	0	8	0	17	8:15 AM	0	0	0	0	0
8:30 AM	15	0	9	1	25	8:30 AM	0	1	0	0	1
8:45 AM	7	0	8	1	16	8:45 AM	0	0	0	0	0
Count Total	83	0	64	3	150	Count Total	0	1	0	1	2
Peak Hour	35	0	31	1	67	Peak Hour	0	0	0	0	0

066M

City of Renton

1055 South Grady Way
Renton, WA 98057

Rwm

Counter: D4-1028
Counted By: KMC
Weather: OVERCAST
Surface: WET

File Name : TMC066M
Site Code : 00000066
Start Date : 09/24/2019
Page No : 1

Groups Printed- CARS/PEDESTRIANS - HEAVY VEHICLES

	BRONSON AV NE From North					NE 3RD ST From East					MONTEREY DR NE From South					NE 3RD ST From West					
Start Time	Right	Thru	Left	Peds	App. Total	Right	Thru	Left	Peds	App. Total	Right	Thru	Left	Peds	App. Total	Right	Thru	Left	Peds	App. Total	Int. Total
11:00 AM	23	0	2	0	25	3	248	0	0	251	0	0	3	0	3	4	224	20	0	248	527
11:15 AM	17	0	3	0	20	0	228	1	0	229	0	0	3	0	3	1	269	12	0	282	534
11:30 AM	22	0	2	0	24	3	241	1	0	245	0	0	4	0	4	2	232	16	0	250	523
11:45 AM	19	0	1	0	20	1	263	1	0	265	2	0	2	0	4	0	242	23	0	265	554
Total	81	0	8	0	89	7	980	3	0	990	2	0	12	0	14	7	967	71	0	1045	2138
12:00 PM	24	1	1	0	26	2	197	0	0	199	2	1	0	0	3	5	222	19	0	246	474
12:15 PM	20	2	5	0	27	2	252	3	0	257	3	0	2	0	5	3	219	27	0	249	538
12:30 PM	28	0	3	1	32	4	244	1	0	249	2	1	4	1	8	4	207	20	0	231	520
12:45 PM	24	1	1	0	26	2	214	2	0	218	0	1	3	0	4	5	214	19	0	238	486
Total	96	4	10	1	111	10	907	6	0	923	7	3	9	1	20	17	862	85	0	964	2018
Grand Total	177	4	18	1	200	17	1887	9	0	1913	9	3	21	1	34	24	1829	156	0	2009	4156
Apprch %	88.5	2	9	0.5		0.9	98.6	0.5	0		26.5	8.8	61.8	2.9		1.2	91	7.8	0		
Total %	4.3	0.1	0.4	0	4.8	0.4	45.4	0.2	0	46	0.2	0.1	0.5	0	0.8	0.6	44	3.8	0	48.3	
CARS/PEDESTRIANS	166	3	17	1	187	17	1835	9	0	1861	8	3	19	1	31	23	1756	151	0	1930	4009
% CARS/PEDESTRIANS	93.8	75	94.4	100	93.5	100	97.2	100	0	97.3	88.9	100	90.5	100	91.2	95.8	96	96.8	0	96.1	96.5
HEAVY VEHICLES	11	1	1	0	13	0	52	0	0	52	1	0	2	0	3	1	73	5	0	79	147
% HEAVY VEHICLES	6.2	25	5.6	0	6.5	0	2.8	0	0	2.7	11.1	0	9.5	0	8.8	4.2	4	3.2	0	3.9	3.5

City of Renton

1055 South Grady Way
Renton, WA 98057

File Name : TMC066M
Site Code : 00000066
Start Date : 09/24/2019
Page No : 2

	BRONSON AV NE From North					NE 3RD ST From East					MONTEREY DR NE From South					NE 3RD ST From West					
Start Time	Right	Thru	Left	Peds	App. Total	Right	Thru	Left	Peds	App. Total	Right	Thru	Left	Peds	App. Total	Right	Thru	Left	Peds	App. Total	Int. Total
Peak Hour Analysis From 11:00 AM to 12:45 PM - Peak 1 of 1																					
Peak Hour for Entire Intersection Begins at 11:00 AM																					
11:00 AM	23	0	2	0	25	3	248	0	0	251	0	0	3	0	3	4	224	20	0	248	527
11:15 AM	17	0	3	0	20	0	228	1	0	229	0	0	3	0	3	1	269	12	0	282	534
11:30 AM	22	0	2	0	24	3	241	1	0	245	0	0	4	0	4	2	232	16	0	250	523
11:45 AM	19	0	1	0	20	1	263	1	0	265	2	0	2	0	4	0	242	23	0	265	554
Total Volume	81	0	8	0	89	7	980	3	0	990	2	0	12	0	14	7	967	71	0	1045	2138
% App. Total	91	0	9	0		0.7	99	0.3	0		14.3	0	85.7	0		0.7	92.5	6.8	0		
PHF	.880	.000	.667	.000	.890	.583	.932	.750	.000	.934	.250	.000	.750	.000	.875	.438	.899	.772	.000	.926	.965
CARS/PEDESTRIANS	77	0	8	0	85	7	956	3	0	966	2	0	12	0	14	7	924	69	0	1000	2065
% CARS/PEDESTRIANS	95.1	0	100	0	95.5	100	97.6	100	0	97.6	100	0	100	0	100	100	95.6	97.2	0	95.7	96.6
HEAVY VEHICLES	4	0	0	0	4	0	24	0	0	24	0	0	0	0	0	0	43	2	0	45	73
% HEAVY VEHICLES	4.9	0	0	0	4.5	0	2.4	0	0	2.4	0	0	0	0	0	0	4.4	2.8	0	4.3	3.4

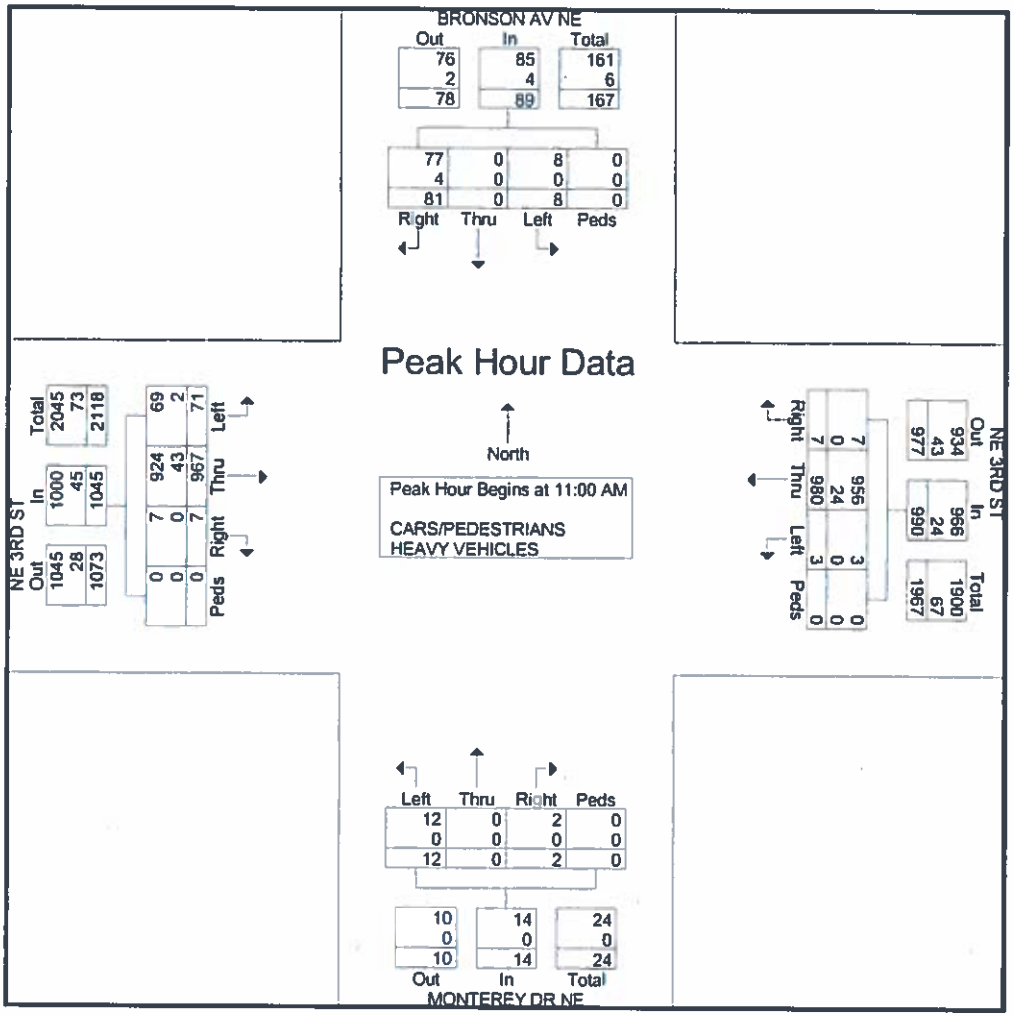

066P

City of Renton

1055 South Grady Way
Renton, WA 98057

RWM

Counter: D4-1028
Counted By: KMC
Weather: SUNNY
Surface: DRY

File Name : TMC066P
Site Code : 00000066
Start Date : 09/26/2019
Page No : 1

Groups Printed- CARS/PEDESTRIANS - HEAVY VEHICLES

	BRONSON WY NE From North					NE 3RD ST From East					MONTEREY DR NE From South					NE 3RD ST From West					
Start Time	Right	Thru	Left	Peds	App. Total	Right	Thru	Left	Peds	App. Total	Right	Thru	Left	Peds	App. Total	Right	Thru	Left	Peds	App. Total	Int. Total
04:00 PM	31	2	1	0	34	1	219	1	0	221	1	0	3	0	4	6	353	27	0	386	645
04:15 PM	15	0	1	1	17	1	222	1	1	225	1	2	1	1	5	4	385	32	0	421	668
04:30 PM	23	1	3	0	27	1	330	1	0	332	1	1	5	0	7	2	390	29	1	422	788
04:45 PM	22	0	2	0	24	2	250	1	0	253	2	1	4	1	8	9	388	32	0	429	714
Total	91	3	7	1	102	5	1021	4	1	1031	5	4	13	2	24	21	1516	120	1	1658	2815
05:00 PM	31	0	2	0	33	2	289	0	1	292	1	1	4	2	8	5	379	29	0	413	746
05:15 PM	23	0	4	0	27	0	244	4	0	248	1	0	5	0	6	11	414	33	0	458	739
05:30 PM	23	0	4	1	28	4	272	0	0	276	2	1	3	0	6	8	400	33	0	441	751
05:45 PM	20	0	2	0	22	1	243	1	0	245	0	1	5	1	7	5	368	16	0	389	663
Total	97	0	12	1	110	7	1048	5	1	1061	4	3	17	3	27	29	1561	111	0	1701	2899
Grand Total	188	3	19	2	212	12	2069	9	2	2092	9	7	30	5	51	50	3077	231	1	3359	5714
Apprch %	88.7	1.4	9	0.9		0.6	98.9	0.4	0.1		17.6	13.7	58.8	9.8		1.5	91.6	6.9	0		
Total %	3.3	0.1	0.3	0	3.7	0.2	36.2	0.2	0	36.6	0.2	0.1	0.5	0.1	0.9	0.9	53.9	4	0	58.8	
CARS/PEDESTRIANS	185	3	19	2	209	12	2027	9	2	2050	9	7	30	5	51	50	3047	230	1	3328	5638
% CARS/PEDESTRIANS	98.4	100	100	100	98.6	100	98	100	100	98	100	100	100	100	100	100	99	99.6	100	99.1	98.7
HEAVY VEHICLES	3	0	0	0	3	0	42	0	0	42	0	0	0	0	0	0	30	1	0	31	76
% HEAVY VEHICLES	1.6	0	0	0	1.4	0	2	0	0	2	0	0	0	0	0	0	1	0.4	0	0.9	1.3

City of Renton

1055 South Grady Way
Renton, WA 98057

File Name : TMC066P
Site Code : 00000066
Start Date : 09/26/2019
Page No : 2

	BRONSON WY NE From North					NE 3RD ST From East					MONTEREY DR NE From South					NE 3RD ST From West					
Start Time	Right	Thru	Left	Peds	App Total	Right	Thru	Left	Peds	App Total	Right	Thru	Left	Peds	App Total	Right	Thru	Left	Peds	App Total	Int. Total
Peak Hour Analysis From 04:00 PM to 05:45 PM - Peak 1 of 1																					
Peak Hour for Entire Intersection Begins at 04:30 PM																					
04:30 PM	23	1	3	0	27	1	330	1	0	332	1	1	5	0	7	2	390	29	1	422	788
04:45 PM	22	0	2	0	24	2	250	1	0	253	2	1	4	1	8	9	388	32	0	429	714
05:00 PM	31	0	2	0	33	2	289	0	1	292	1	1	4	2	8	5	379	29	0	413	746
05:15 PM	23	0	4	0	27	0	244	4	0	248	1	0	5	0	6	11	414	33	0	458	739
Total Volume	99	1	11	0	111	5	1113	6	1	1125	5	3	18	3	29	27	1571	123	1	1722	2987
% App Total	89.2	0.9	9.9	0		0.4	98.9	0.5	0.1		17.2	10.3	62.1	10.3		1.6	91.2	7.1	0.1		
PHF	.798	.250	.688	.000	.841	.625	.843	.375	.250	.847	.625	.750	.900	.375	.906	.614	.949	.932	.250	.940	.948
CARS/PEDESTRIANS	97	1	11	0	109	5	1088	6	1	1100	5	3	18	3	29	27	1554	122	1	1704	2942
% CARS/PEDESTRIANS	98.0	100	100	0	98.2	100	97.8	100	100	97.8	100	100	100	100	100	100	98.9	99.2	100	99.0	98.5
HEAVY VEHICLES	2	0	0	0	2	0	25	0	0	25	0	0	0	0	0	0	17	1	0	18	45
% HEAVY VEHICLES	2.0	0	0	0	1.8	0	2.2	0	0	2.2	0	0	0	0	0	0	1.1	0.8	0	1.0	1.5

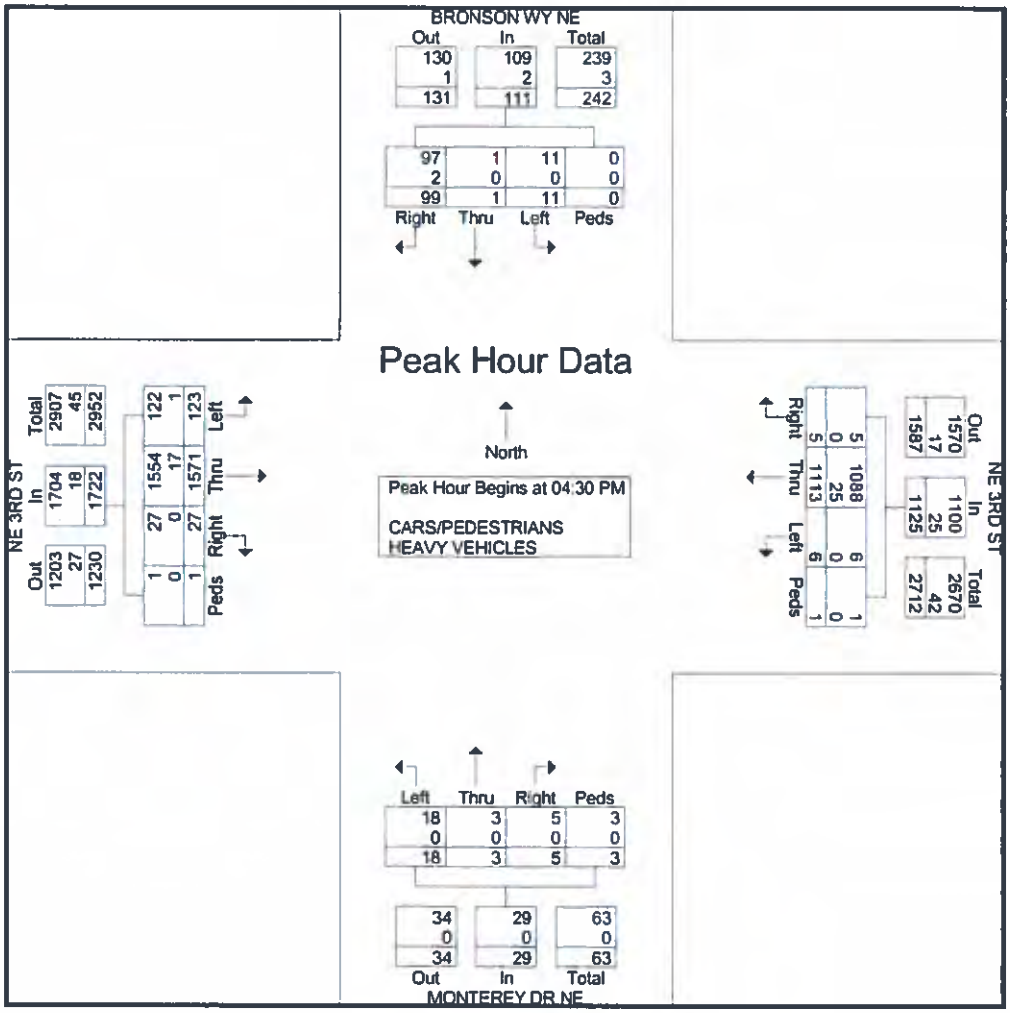

085A

City of Renton

1055 South Grady Way
Renton, WA 98057

RWM

Counter: D4-1028
Counted By: KMC
Weather: OVERCAST
Surface: DRY

File Name : TMC085A
Site Code : 00000085
Start Date : 09/13/2019
Page No : 1

Groups Printed- CARS/PEDESTRIANS - HEAVY VEHICLES

	EDMONDS AV NE From North					NE 3RD ST From East					EDMONDS AV NE From South					NE 3RD ST From West					
Start Time	Right	Thru	Left	Peds	App Total	Right	Thru	Left	Peds	App Total	Right	Thru	Left	Peds	App Total	Right	Thru	Left	Peds	App Total	Int. Total
07:00 AM	11	1	3	4	19	1	276	2	0	279	8	7	30	0	45	6	181	2	0	189	532
07:15 AM	15	3	4	0	22	2	289	3	1	295	10	6	33	0	49	4	183	3	0	190	556
07:30 AM	15	0	1	0	16	0	307	1	0	308	14	11	36	0	61	4	213	0	0	217	602
07:45 AM	7	1	0	0	8	4	270	3	0	277	15	7	30	0	52	5	213	6	0	224	561
Total	48	5	8	4	65	7	1142	9	1	1159	47	31	129	0	207	19	790	11	0	820	2251
08:00 AM	7	4	5	1	17	4	291	5	2	302	11	2	39	0	52	7	225	4	0	236	607
08:15 AM	5	2	13	1	21	7	259	3	1	270	27	5	38	0	70	10	199	3	0	212	573
08:30 AM	5	1	13	3	22	5	251	5	1	262	21	4	34	0	59	15	235	7	0	257	600
08:45 AM	5	3	15	2	25	8	244	17	4	273	19	6	32	1	58	13	219	5	0	237	593
Total	22	10	46	7	85	24	1045	30	8	1107	78	17	143	1	239	45	878	19	0	942	2373
Grand Total	70	15	54	11	150	31	2187	39	9	2266	125	48	272	1	446	64	1668	30	0	1762	4624
Apprch %	46.7	10	36	7.3		1.4	96.5	1.7	0.4		28	10.8	61	0.2		3.6	94.7	1.7	0		
Total %	1.5	0.3	1.2	0.2	3.2	0.7	47.3	0.8	0.2	49	2.7	1	5.9	0	9.6	1.4	36.1	0.6	0	38.1	
CARS/PEDESTRIANS	70	12	53	11	146	30	2143	36	9	2218	123	47	269	1	440	64	1579	26	0	1669	4473
% CARS/PEDESTRIANS	100	80	98.1	100	97.3	96.8	98	92.3	100	97.9	98.4	97.9	98.9	100	98.7	100	94.7	86.7	0	94.7	96.7
HEAVY VEHICLES	0	3	1	0	4	1	44	3	0	48	2	1	3	0	6	0	89	4	0	93	151
% HEAVY VEHICLES	0	20	1.9	0	2.7	3.2	2	7.7	0	2.1	1.6	2.1	1.1	0	1.3	0	5.3	13.3	0	5.3	3.3

City of Renton

1055 South Grady Way
Renton, WA 98057

File Name : TMC085A
Site Code : 00000085
Start Date : 09/13/2019
Page No : 2

	EDMONDS AV NE From North					NE 3RD ST From East					EDMONDS AV NE From South					NE 3RD ST From West					
Start Time	Right	Thru	Left	Peds	App. Total	Right	Thru	Left	Peds	App. Total	Right	Thru	Left	Peds	App. Total	Right	Thru	Left	Peds	App. Total	Int. Total
Peak Hour Analysis From 07:00 AM to 08:45 AM - Peak 1 of 1																					
Peak Hour for Entire Intersection Begins at 08:00 AM																					
08:00 AM	7	4	5	1	17	4	291	5	2	302	11	2	39	0	52	7	225	4	0	236	607
08:15 AM	5	2	13	1	21	7	259	3	1	270	27	5	38	0	70	10	199	3	0	212	573
08:30 AM	5	1	13	3	22	5	251	5	1	262	21	4	34	0	59	15	235	7	0	257	600
08:45 AM	5	3	15	2	25	8	244	17	4	273	19	6	32	1	58	13	219	5	0	237	593
Total Volume	22	10	46	7	85	24	1045	30	8	1107	78	17	143	1	239	45	878	19	0	942	2373
% App. Total	25.9	11.8	54.1	8.2		2.2	94.4	2.7	0.7		32.6	7.1	59.8	0.4		4.8	93.2	2	0		
PHF	.786	.625	.767	.583	.850	.750	.898	.441	.500	.916	.722	.708	.917	.250	.854	.750	.934	.679	.000	.916	.977
CARS/PEDESTRIANS	22	7	45	7	81	23	1019	28	8	1078	77	16	140	1	234	45	820	16	0	881	2274
% CARS/PEDESTRIANS	100	70.0	97.8	100	95.3	95.8	97.5	93.3	100	97.4	98.7	94.1	97.9	100	97.9	100	93.4	84.2	0	93.5	95.8
HEAVY VEHICLES	0	3	1	0	4	1	26	2	0	29	1	1	3	0	5	0	58	3	0	61	99
% HEAVY VEHICLES	0	30.0	2.2	0	4.7	4.2	2.5	6.7	0	2.6	1.3	5.9	2.1	0	2.1	0	6.6	15.8	0	6.5	4.2

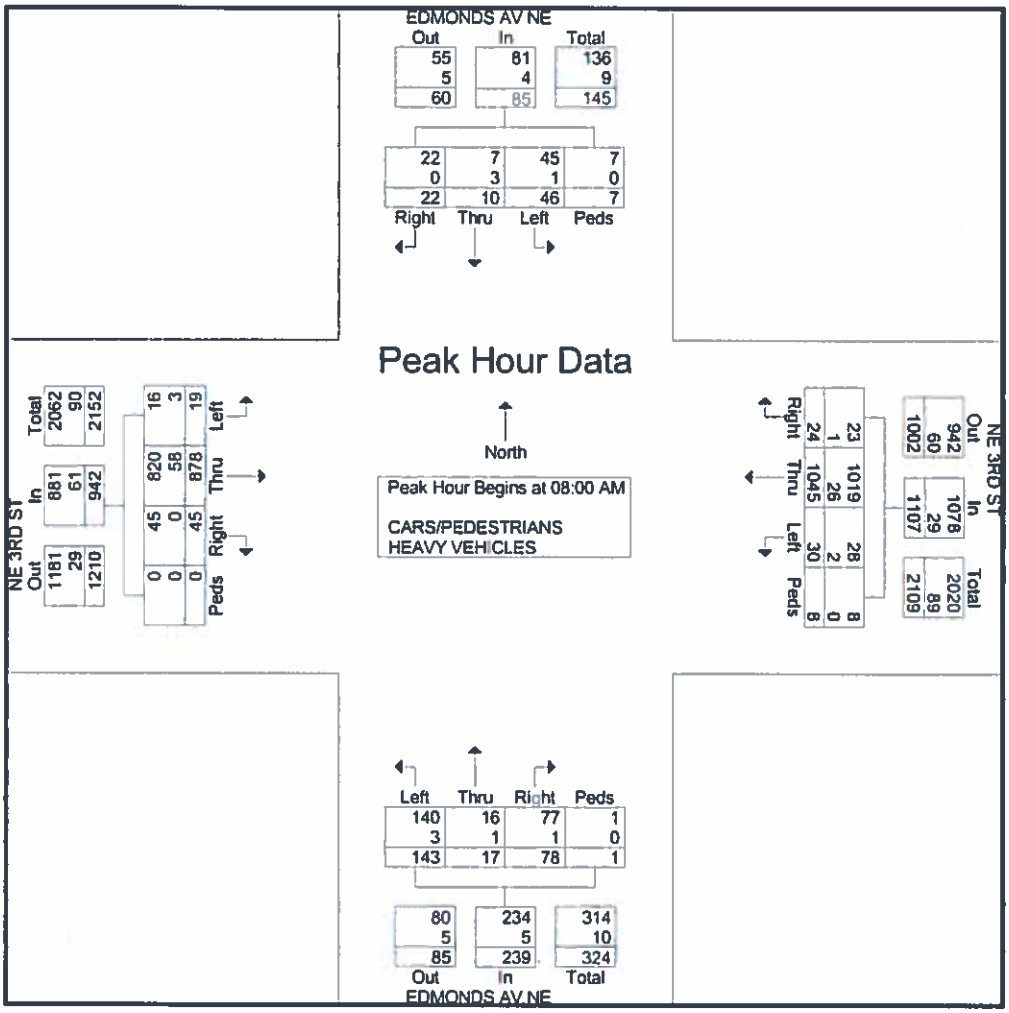

085M

City of Renton

1055 South Grady Way
Renton, WA 98057

RWM

Counter: D4-1028
Counted By: KMC
Weather: RAINY
Surface: WET

File Name : TMC085M
Site Code : 00000085
Start Date : 09/17/2019
Page No : 1

Groups Printed- CARS/PEDESTRIANS - HEAVY VEHICLES

	EDMONDS AV NE From North					NE 3RD ST From East					EDMONDS AV NE From South					NE 3RD ST From West					
Start Time	Right	Thru	Left	Peds	App Total	Right	Thru	Left	Peds	App Total	Right	Thru	Left	Peds	App Total	Right	Thru	Left	Peds	App Total	Int. Total
11:00 AM	3	2	2	0	7	0	176	4	2	182	6	2	15	0	23	15	226	1	0	242	454
11:15 AM	5	0	1	0	6	0	215	7	0	222	8	2	14	0	24	12	194	2	0	208	460
11:30 AM	7	3	1	0	11	1	198	10	0	209	12	1	21	0	34	15	240	4	0	259	513
11:45 AM	1	0	3	0	4	4	210	12	0	226	14	1	20	0	35	11	192	3	0	206	471
Total	16	5	7	0	28	5	799	33	2	839	40	6	70	0	116	53	852	10	0	915	1898
12:00 PM	2	3	0	0	5	1	203	10	0	214	5	3	8	0	16	20	203	1	0	224	459
12:15 PM	8	1	1	0	10	1	239	4	1	245	4	3	23	0	30	14	186	2	0	202	487
12:30 PM	7	5	3	0	15	2	224	2	0	228	7	3	17	0	27	16	172	3	0	191	461
12:45 PM	7	3	4	0	14	2	214	4	0	220	8	2	19	0	29	21	187	6	0	214	477
Total	24	12	8	0	44	6	880	20	1	907	24	11	67	0	102	71	748	12	0	831	1884
Grand Total	40	17	15	0	72	11	1679	53	3	1746	64	17	137	0	218	124	1600	22	0	1746	3782
Apprch %	55.6	23.6	20.8	0		0.6	96.2	3	0.2		29.4	7.8	62.8	0		7.1	91.6	1.3	0		
Total %	1.1	0.4	0.4	0	1.9	0.3	44.4	1.4	0.1	46.2	1.7	0.4	3.6	0	5.8	3.3	42.3	0.6	0	46.2	
CARS/PEDESTRIANS	40	16	15	0	71	10	1594	49	3	1656	60	16	136	0	212	122	1541	21	0	1684	3623
% CARS/PEDESTRIANS	100	94.1	100	0	98.6	90.9	94.9	92.5	100	94.8	93.8	94.1	99.3	0	97.2	98.4	96.3	95.5	0	96.4	95.8
HEAVY VEHICLES	0	1	0	0	1	1	85	4	0	90	4	1	1	0	6	2	59	1	0	62	159
% HEAVY VEHICLES	0	5.9	0	0	1.4	9.1	5.1	7.5	0	5.2	6.2	5.9	0.7	0	2.8	1.6	3.7	4.5	0	3.6	4.2

City of Renton

1055 South Grady Way
Renton, WA 98057

File Name : TMC085M
Site Code : 00000085
Start Date : 09/17/2019
Page No : 2

	EDMONDS AV NE From North					NE 3RD ST From East					EDMONDS AV NE From South					NE 3RD ST From West					
Start Time	Right	Thru	Left	Peds	App. Total	Right	Thru	Left	Peds	App. Total	Right	Thru	Left	Peds	App. Total	Right	Thru	Left	Peds	App. Total	Int. Total
Peak Hour Analysis From 11:00 AM to 12:45 PM - Peak 1 of 1																					
Peak Hour for Entire Intersection Begins at 11:30 AM																					
11:30 AM	7	3	1	0	11	1	198	10	0	209	12	1	21	0	34	15	240	4	0	259	513
11:45 AM	1	0	3	0	4	4	210	12	0	226	14	1	20	0	35	11	192	3	0	206	471
12:00 PM	2	3	0	0	5	1	203	10	0	214	5	3	8	0	16	20	203	1	0	224	459
12:15 PM	8	1	1	0	10	1	239	4	1	245	4	3	23	0	30	14	186	2	0	202	487
Total Volume	18	7	5	0	30	7	850	36	1	894	35	8	72	0	115	60	821	10	0	891	1930
% App. Total	60	23.3	16.7	0		0.8	95.1	4	0.1		30.4	7	62.6	0		6.7	92.1	1.1	0		
PHF	.563	.583	.417	.000	.682	.438	.889	.750	.250	.912	.625	.667	.783	.000	.821	.750	.855	.625	.000	.860	.941
CARS/PEDESTRIANS	18	7	5	0	30	6	804	32	1	843	32	7	71	0	110	59	790	10	0	859	1842
% CARS/PEDESTRIANS	100	100	100	0	100	85.7	94.6	88.9	100	94.3	91.4	87.5	98.6	0	95.7	98.3	96.2	100	0	96.4	95.4
HEAVY VEHICLES	0	0	0	0	0	1	46	4	0	51	3	1	1	0	5	1	31	0	0	32	88
% HEAVY VEHICLES	0	0	0	0	0	14.3	5.4	11.1	0	5.7	8.6	12.5	1.4	0	4.3	1.7	3.8	0	0	3.6	4.6

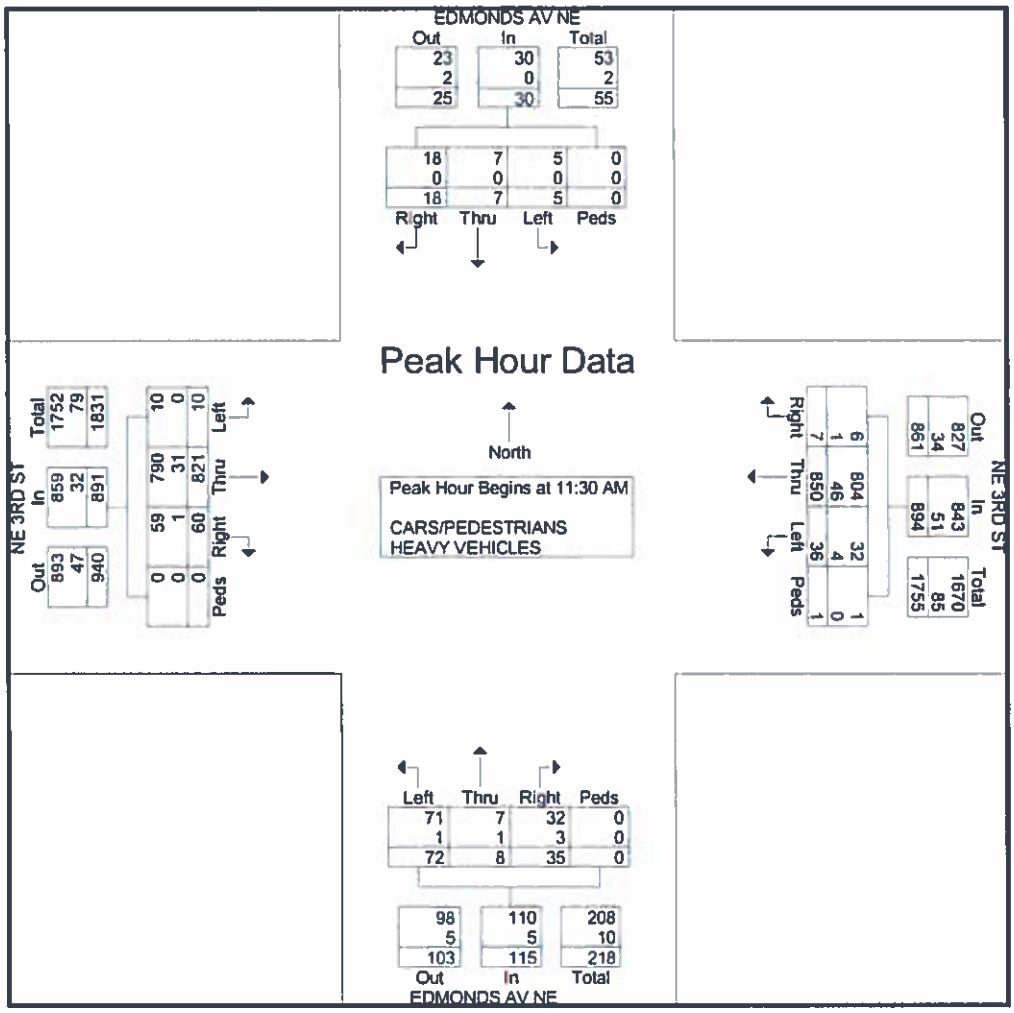

085P

City of Renton

1055 South Grady Way
Renton, WA 98057

RWM

Counter: D4-1028
Counted By: KMC
Weather: SUNNY
Surface: DRY

File Name : TMC085P
Site Code : 00000085
Start Date : 09/10/2019
Page No : 1

Groups Printed- CARS/PEDESTRIANS - HEAVY VEHICLES

	EDMONDS AV NE From North					NE 3RD ST From East					EDMONDS AV NE From South					NE 3RD ST From West					
Start Time	Right	Thru	Left	Peds	App. Total	Right	Thru	Left	Peds	App. Total	Right	Thru	Left	Peds	App. Total	Right	Thru	Left	Peds	App. Total	Int. Total
04:00 PM	7	5	1	1	14	2	203	19	3	227	9	6	17	0	32	24	321	3	0	348	621
04:15 PM	8	5	6	0	19	2	251	12	5	270	10	4	17	0	31	25	345	11	1	382	702
04:30 PM	6	5	3	0	14	2	265	15	2	284	11	2	19	0	32	28	343	2	0	373	703
04:45 PM	6	3	5	3	17	3	236	23	3	265	6	3	16	0	25	36	328	8	1	373	680
Total	27	18	15	4	64	9	955	69	13	1046	36	15	69	0	120	113	1337	24	2	1476	2706
05:00 PM	7	4	2	0	13	4	257	16	0	277	12	4	15	0	31	43	392	6	0	441	762
05:15 PM	4	5	1	0	10	5	205	20	4	234	7	5	32	0	44	48	349	4	0	401	689
05:30 PM	4	3	2	1	10	5	258	19	0	282	10	1	21	0	32	38	358	5	0	401	725
05:45 PM	5	8	4	1	18	2	234	10	1	247	14	6	32	0	52	50	341	7	0	398	715
Total	20	20	9	2	51	16	954	65	5	1040	43	16	100	0	159	179	1440	22	0	1641	2891
Grand Total	47	38	24	6	115	25	1909	134	18	2086	79	31	169	0	279	292	2777	46	2	3117	5597
Apprch %	40.9	33	20.9	5.2		1.2	91.5	6.4	0.9		28.3	11.1	60.6	0		9.4	89.1	1.5	0.1		
Total %	0.8	0.7	0.4	0.1	2.1	0.4	34.1	2.4	0.3	37.3	1.4	0.6	3	0	5	5.2	49.6	0.8	0	55.7	
CARS/PEDESTRIANS	45	35	24	6	110	24	1861	134	18	2037	78	29	165	0	272	291	2747	45	2	3085	5504
% CARS/PEDESTRIANS	95.7	92.1	100	100	95.7	96	97.5	100	100	97.7	98.7	93.5	97.6	0	97.5	99.7	98.9	97.8	100	99	98.3
HEAVY VEHICLES	2	3	0	0	5	1	48	0	0	49	1	2	4	0	7	1	30	1	0	32	93
% HEAVY VEHICLES	4.3	7.9	0	0	4.3	4	2.5	0	0	2.3	1.3	6.5	2.4	0	2.5	0.3	1.1	2.2	0	1	1.7

City of Renton

1055 South Grady Way
Renton, WA 98057

File Name : TMC085P
Site Code : 00000085
Start Date : 09/10/2019
Page No : 2

	EDMONDS AV NE From North					NE 3RD ST From East					EDMONDS AV NE From South					NE 3RD ST From West					
Start Time	Right	Thru	Left	Peds	App. Total	Right	Thru	Left	Peds	App. Total	Right	Thru	Left	Peds	App. Total	Right	Thru	Left	Peds	App. Total	Int. Total
Peak Hour Analysis From 04:00 PM to 05:45 PM - Peak 1 of 1																					
Peak Hour for Entire Intersection Begins at 05:00 PM																					
05:00 PM	7	4	2	0	13	4	257	16	0	277	12	4	15	0	31	43	392	6	0	441	762
05:15 PM	4	5	1	0	10	5	205	20	4	234	7	5	32	0	44	48	349	4	0	401	689
05:30 PM	4	3	2	1	10	5	258	19	0	282	10	1	21	0	32	38	358	5	0	401	725
05:45 PM	5	8	4	1	18	2	234	10	1	247	14	6	32	0	52	50	341	7	0	398	715
Total Volume	20	20	9	2	51	16	954	65	5	1040	43	16	100	0	159	179	1440	22	0	1641	2891
% App. Total	39.2	39.2	17.6	3.9		1.5	91.7	6.2	0.5		27	10.1	62.9	0		10.9	87.8	1.3	0		
PHF	.714	.625	.563	.500	.708	.800	.924	.813	.313	.922	.768	.667	.781	.000	.764	.895	.918	.786	.000	.930	.948
CARS/PEDESTRIANS	20	19	9	2	50	16	937	65	5	1023	43	16	100	0	159	179	1430	22	0	1631	2863
% CARS/PEDESTRIANS	100	95.0	100	100	98.0	100	98.2	100	100	98.4	100	100	100	0	100	100	99.3	100	0	99.4	99.0
HEAVY VEHICLES	0	1	0	0	1	0	17	0	0	17	0	0	0	0	0	0	10	0	0	10	28
% HEAVY VEHICLES	0	5.0	0	0	2.0	0	1.8	0	0	1.6	0	0	0	0	0	0	0.7	0	0	0.6	1.0

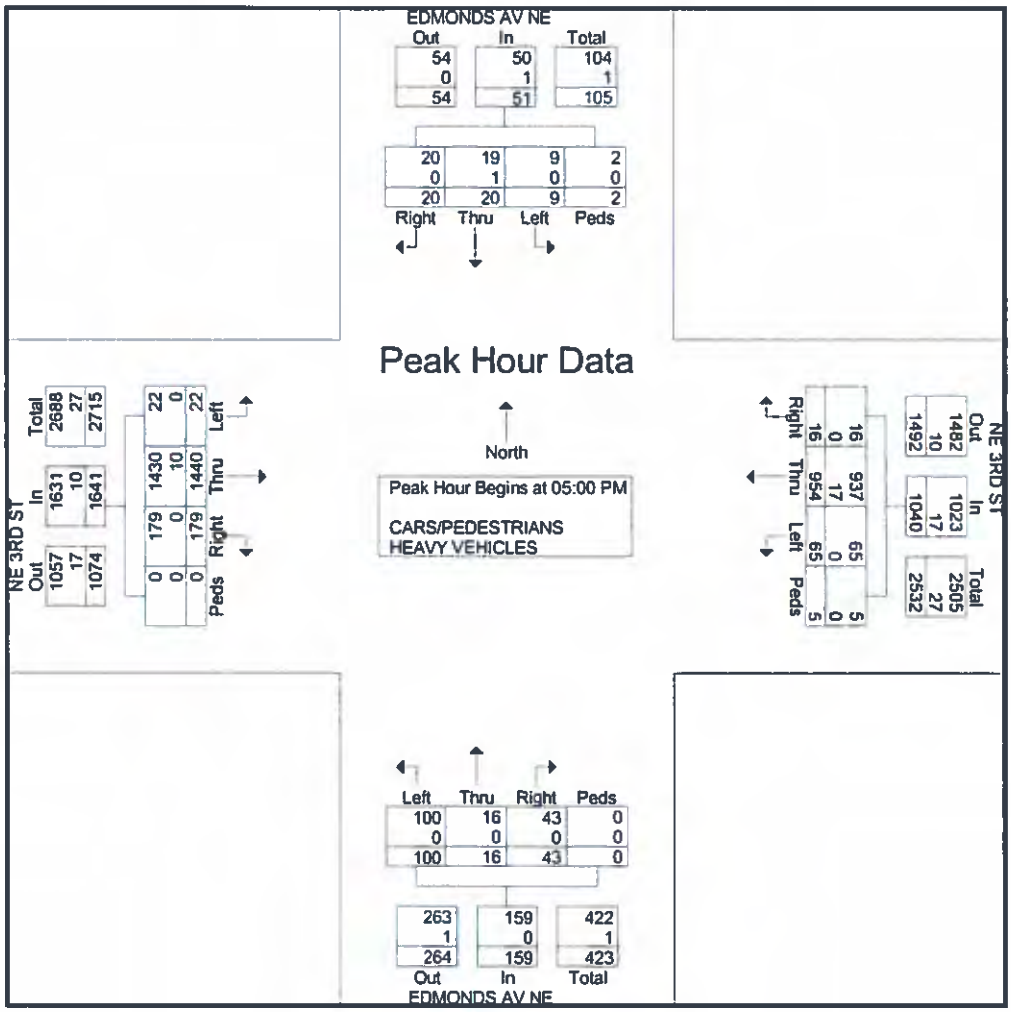

104A

City of Renton

1055 South Grady Way
Renton, WA 98057

Rwm

Counter: D4-1028
Counted By: KMC
Weather: SUNNY
Surface: DRY

File Name : TMC104A
Site Code : 00000104
Start Date : 09/05/2019
Page No : 1

Groups Printed- CARS/PEDESTRIANS - HEAVY VEHICLES

	JEFFERSON AV NE From North					NE 3RD ST From East					JEFFERSON AV NE From South					NE 3RD ST From West					
Start Time	Right	Thru	Left	Peds	App Total	Right	Thru	Left	Peds	App Total	Right	Thru	Left	Peds	App Total	Right	Thru	Left	Peds	App Total	Int. Total
07:00 AM	7	1	12	0	20	10	299	1	0	310	7	1	3	0	11	5	224	3	0	232	573
07:15 AM	1	0	11	0	12	11	330	2	0	343	3	0	5	0	8	11	181	4	0	196	559
07:30 AM	4	0	11	0	15	19	332	1	0	352	5	0	5	1	11	6	204	5	1	216	594
07:45 AM	1	0	9	0	10	23	274	0	0	297	4	1	9	0	14	8	223	3	0	234	555
Total	13	1	43	0	57	63	1235	4	0	1302	19	2	22	1	44	30	832	15	1	878	2281
08:00 AM	1	1	15	0	17	23	272	4	0	299	3	3	8	0	14	8	225	4	0	237	567
08:15 AM	4	2	18	0	24	22	306	1	0	329	5	0	4	0	9	4	227	3	0	234	596
08:30 AM	2	1	18	0	21	16	284	1	0	301	2	2	8	0	12	12	214	4	0	230	564
08:45 AM	3	0	5	0	8	7	248	5	0	260	4	2	5	1	12	6	229	9	1	245	525
Total	10	4	56	0	70	68	1110	11	0	1189	14	7	25	1	47	30	895	20	1	946	2252
Grand Total	23	5	99	0	127	131	2345	15	0	2491	33	9	47	2	91	60	1727	35	2	1824	4533
Apprch %	18.1	3.9	78	0		5.3	94.1	0.6	0		36.3	9.9	51.6	2.2		3.3	94.7	1.9	0.1		
Total %	0.5	0.1	2.2	0	2.8	2.9	51.7	0.3	0	55	0.7	0.2	1	0	2	1.3	38.1	0.8	0	40.2	
CARS/PEDESTRIANS	22	5	95	0	122	131	2289	14	0	2434	21	6	34	2	63	55	1649	34	2	1740	4359
% CARS/PEDESTRIANS	95.7	100	96	0	96.1	100	97.6	93.3	0	97.7	63.6	66.7	72.3	100	69.2	91.7	95.5	97.1	100	95.4	96.2
HEAVY VEHICLES	1	0	4	0	5	0	56	1	0	57	12	3	13	0	28	5	78	1	0	84	174
% HEAVY VEHICLES	4.3	0	4	0	3.9	0	2.4	6.7	0	2.3	36.4	33.3	27.7	0	30.8	8.3	4.5	2.9	0	4.6	3.8

City of Renton

1055 South Grady Way
Renton, WA 98057

File Name : TMC104A
Site Code : 00000104
Start Date : 09/05/2019
Page No : 2

	JEFFERSON AV NE From North					NE 3RD ST From East					JEFFERSON AV NE From South					NE 3RD ST From West					
Start Time	Right	Thru	Left	Peds	App. Total	Right	Thru	Left	Peds	App. Total	Right	Thru	Left	Peds	App. Total	Right	Thru	Left	Peds	App. Total	Int. Total
Peak Hour Analysis From 07:00 AM to 08:45 AM - Peak 1 of 1																					
Peak Hour for Entire Intersection Begins at 07:30 AM																					
07:30 AM	4	0	11	0	15	19	332	1	0	352	5	0	5	1	11	6	204	5	1	216	594
07:45 AM	1	0	9	0	10	23	274	0	0	297	4	1	9	0	14	8	223	3	0	234	555
08:00 AM	1	1	15	0	17	23	272	4	0	299	3	3	8	0	14	8	225	4	0	237	567
08:15 AM	4	2	18	0	24	22	306	1	0	329	5	0	4	0	9	4	227	3	0	234	596
Total Volume	10	3	53	0	66	87	1184	6	0	1277	17	4	26	1	48	26	879	15	1	921	2312
% App. Total	15.2	4.5	80.3	0		6.8	92.7	0.5	0		35.4	8.3	54.2	2.1		2.8	95.4	1.6	0.1		
PHF	.625	.375	.736	.000	.688	.946	.892	.375	.000	.907	.850	.333	.722	.250	.857	.813	.968	.750	.250	.972	.970
CARS/PEDESTRIANS	9	3	51	0	63	87	1155	6	0	1248	9	3	16	1	29	24	841	15	1	881	2221
% CARS/PEDESTRIANS	90.0	100	96.2	0	95.5	100	97.6	100	0	97.7	52.9	75.0	61.5	100	60.4	92.3	95.7	100	100	95.7	96.1
HEAVY VEHICLES	1	0	2	0	3	0	29	0	0	29	8	1	10	0	19	2	38	0	0	40	91
% HEAVY VEHICLES	10.0	0	3.8	0	4.5	0	2.4	0	0	2.3	47.1	25.0	38.5	0	39.6	7.7	4.3	0	0	4.3	3.9

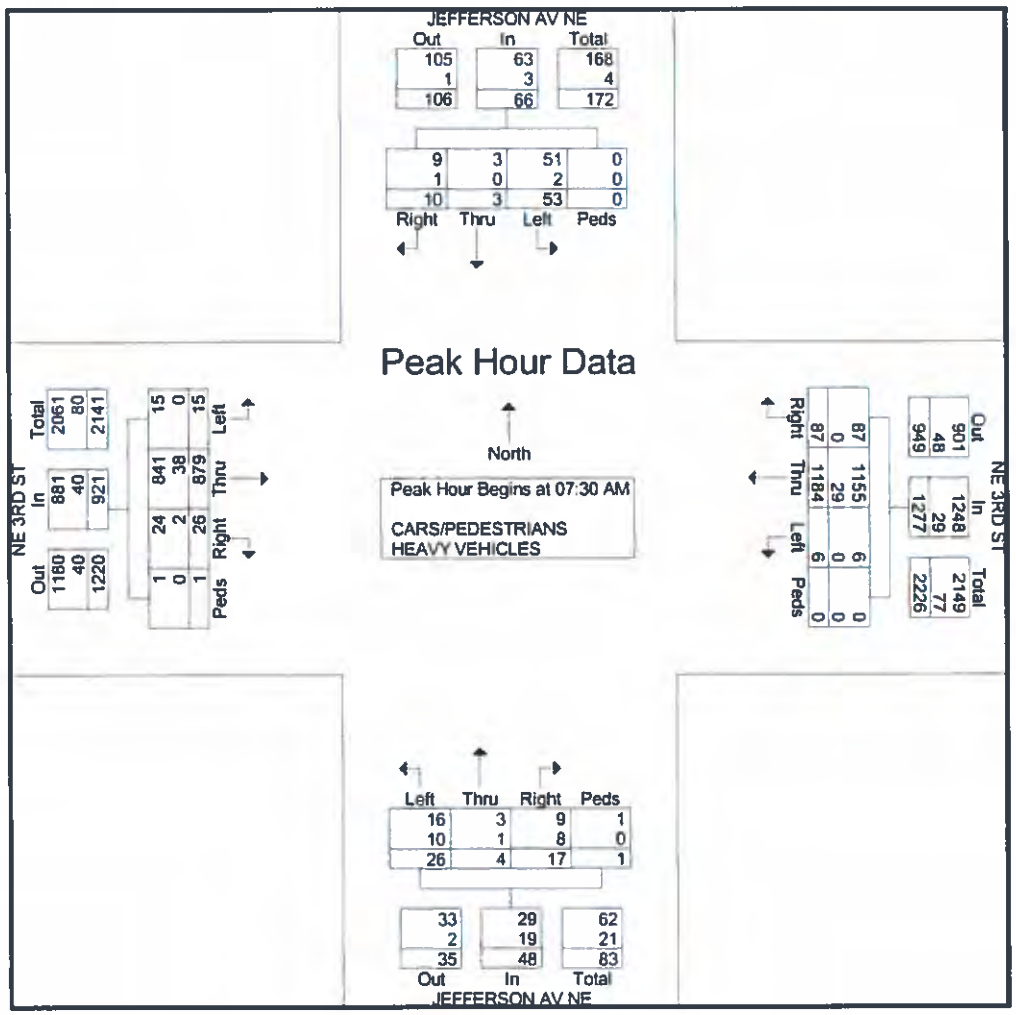

104M

City of Renton

1055 South Grady Way
Renton, WA 98057

RWM

Counter: D4-1028
Counted By: KMC
Weather: OVERCAST
Surface: DRY

File Name : TMC104M
Site Code : 00000104
Start Date : 09/13/2019
Page No : 1

Groups Printed- CARS/PEDESTRIANS - HEAVY VEHICLES

	JEFFERSON AV NE From North					NE 3RD ST From East					JEFFERSON AV NE From South					NE 3RD ST From West					
Start Time	Right	Thru	Left	Peds	App Total	Right	Thru	Left	Peds	App Total	Right	Thru	Left	Peds	App Total	Right	Thru	Left	Peds	App Total	Int. Total
11:00 AM	5	1	11	0	17	16	205	5	0	226	2	1	9	0	12	13	182	5	0	200	455
11:15 AM	6	2	11	0	19	13	212	4	0	229	6	0	12	0	18	8	196	7	0	211	477
11:30 AM	8	3	12	0	23	13	224	3	0	240	5	0	8	1	14	6	213	3	0	222	499
11:45 AM	5	2	15	0	22	5	188	11	0	204	5	2	8	0	15	7	211	4	0	222	463
Total	24	8	49	0	81	47	829	23	0	899	18	3	37	1	59	34	802	19	0	855	1894
12:00 PM	7	0	16	0	23	13	180	6	0	199	7	1	10	0	18	6	214	7	1	228	468
12:15 PM	4	0	16	0	20	19	202	5	0	226	9	1	10	0	20	5	196	0	0	201	467
12:30 PM	4	1	8	0	13	18	197	5	0	220	4	0	9	0	13	12	231	5	1	249	495
12:45 PM	3	1	12	0	16	13	213	3	0	229	3	7	11	0	21	11	188	1	0	200	466
Total	18	2	52	0	72	63	792	19	0	874	23	9	40	0	72	34	829	13	2	878	1896
Grand Total	42	10	101	0	153	110	1621	42	0	1773	41	12	77	1	131	68	1631	32	2	1733	3790
Apprch %	27.5	6.5	66	0		6.2	91.4	2.4	0		31.3	9.2	58.8	0.8		3.9	94.1	1.8	0.1		
Total %	1.1	0.3	2.7	0	4	2.9	42.8	1.1	0	46.8	1.1	0.3	2	0	3.5	1.8	43	0.8	0.1	45.7	
CARS/PEDESTRIANS	39	8	100	0	147	109	1590	36	0	1735	35	10	57	1	103	53	1604	31	1	1689	3674
% CARS/PEDESTRIANS	92.9	80	99	0	96.1	99.1	98.1	85.7	0	97.9	85.4	83.3	74	100	78.6	77.9	98.3	96.9	50	97.5	96.9
HEAVY VEHICLES	3	2	1	0	6	1	31	6	0	38	6	2	20	0	28	15	27	1	1	44	116
% HEAVY VEHICLES	7.1	20	1	0	3.9	0.9	1.9	14.3	0	2.1	14.6	16.7	26	0	21.4	22.1	1.7	3.1	50	2.5	3.1

City of Renton

1055 South Grady Way
Renton, WA 98057

File Name : TMC104M
Site Code : 00000104
Start Date : 09/13/2019
Page No : 2

	JEFFERSON AV NE From North					NE 3RD ST From East					JEFFERSON AV NE From South					NE 3RD ST From West					
Start Time	Right	Thru	Left	Peds	App. Total	Right	Thru	Left	Peds	App. Total	Right	Thru	Left	Peds	App. Total	Right	Thru	Left	Peds	App. Total	Int. Total
Peak Hour Analysis From 11:00 AM to 12:45 PM - Peak 1 of 1																					
Peak Hour for Entire Intersection Begins at 11:15 AM																					
11:15 AM	6	2	11	0	19	13	212	4	0	229	6	0	12	0	18	8	196	7	0	211	477
11:30 AM	8	3	12	0	23	13	224	3	0	240	5	0	8	1	14	6	213	3	0	222	499
11:45 AM	5	2	15	0	22	5	188	11	0	204	5	2	8	0	15	7	211	4	0	222	463
12:00 PM	7	0	16	0	23	13	180	6	0	199	7	1	10	0	18	6	214	7	1	228	468
Total Volume	26	7	54	0	87	44	804	24	0	872	23	3	38	1	65	27	834	21	1	883	1907
% App. Total	29.9	8	62.1	0		5	92.2	2.8	0		35.4	4.6	58.5	1.5		3.1	94.5	2.4	0.1		
PHF	.813	.583	.844	.000	.946	.846	.897	.545	.000	.908	.821	.375	.792	.250	.903	.844	.974	.750	.250	.968	.955
CARS/PEDESTRIANS	24	6	53	0	83	43	790	20	0	853	18	2	25	1	46	18	821	20	0	859	1841
% CARS/PEDESTRIANS	92.3	85.7	98.1	0	95.4	97.7	98.3	83.3	0	97.8	78.3	66.7	65.8	100	70.8	66.7	98.4	95.2	0	97.3	96.5
HEAVY VEHICLES	2	1	1	0	4	1	14	4	0	19	5	1	13	0	19	9	13	1	1	24	66
% HEAVY VEHICLES	7.7	14.3	1.9	0	4.6	2.3	1.7	16.7	0	2.2	21.7	33.3	34.2	0	29.2	33.3	1.6	4.8	100	2.7	3.5

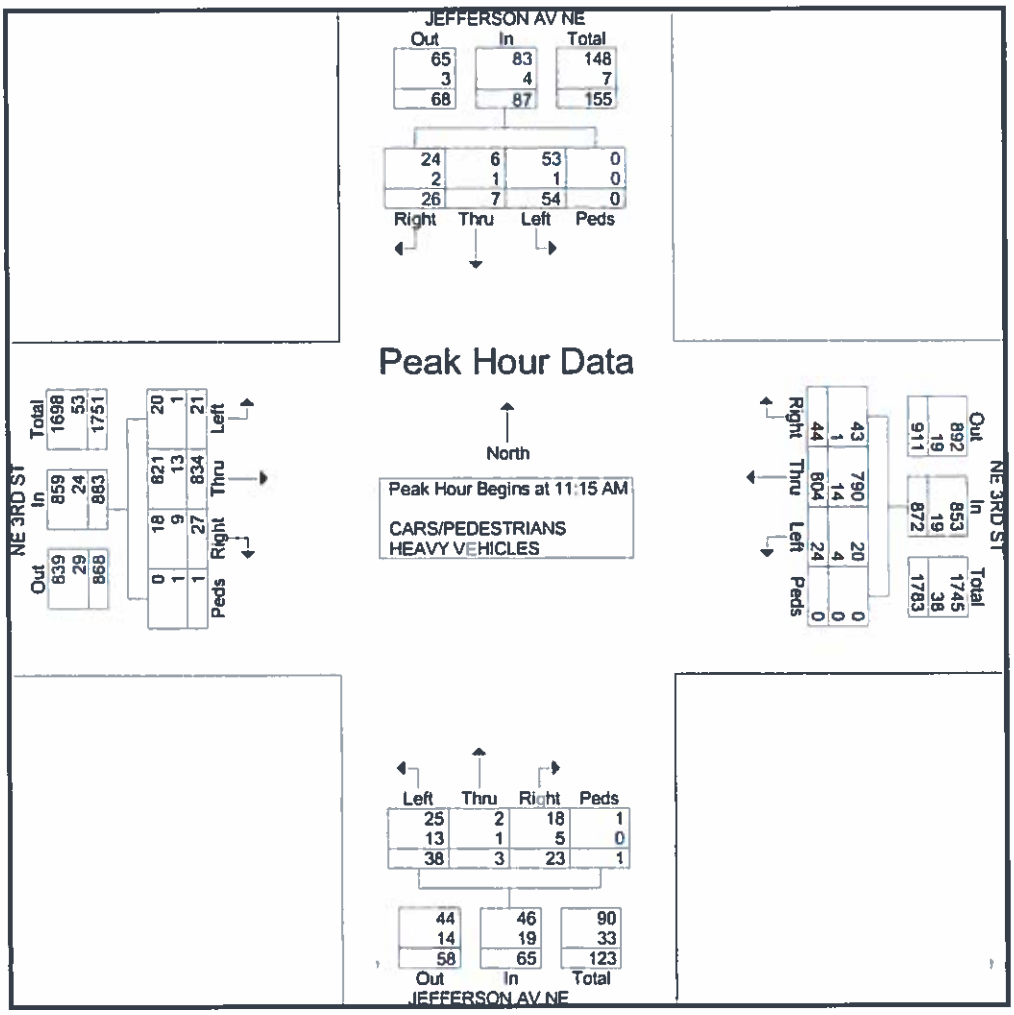

104P

City of Renton

1055 South Grady Way
Renton, WA 98057

RWM

Counter: D4-1029
Counted By: KMC
Weather: RAINY
Surface: WET

File Name : TMC104P
Site Code : 00000104
Start Date : 09/09/2019
Page No : 1

Groups Printed- CARS/PEDESTRIANS - HEAVY VEHICLES

	JEFFERSON AV NE From North					NE 3RD ST From East					JEFFERSON AV NE From South					NE 3RD ST From West					
Start Time	Right	Thru	Left	Peds	App Total	Right	Thru	Left	Peds	App Total	Right	Thru	Left	Peds	App Total	Right	Thru	Left	Peds	App Total	Int. Total
04:00 PM	7	1	19	0	27	19	206	5	0	230	5	3	12	2	22	11	276	1	1	289	568
04:15 PM	8	1	11	0	20	26	197	4	0	227	11	0	16	0	27	5	379	1	0	385	659
04:30 PM	3	2	18	0	23	17	240	5	0	262	2	3	22	0	27	4	327	1	0	332	644
04:45 PM	8	0	12	0	20	16	216	3	0	235	3	0	5	1	9	4	318	1	0	323	587
Total	26	4	60	0	90	78	859	17	0	954	21	6	55	3	85	24	1300	4	1	1329	2458
05:00 PM	10	1	23	0	34	20	245	0	0	265	6	5	33	1	45	1	375	5	0	381	725
05:15 PM	11	0	18	0	29	13	195	1	0	209	0	1	4	0	5	3	329	12	0	344	587
05:30 PM	5	0	22	0	27	21	232	0	0	253	0	0	4	0	4	2	391	3	0	396	680
05:45 PM	9	0	19	0	28	16	230	0	0	246	0	1	1	0	2	0	328	7	0	335	611
Total	35	1	82	0	118	70	902	1	0	973	6	7	42	1	56	6	1423	27	0	1456	2603
Grand Total	61	5	142	0	208	148	1761	18	0	1927	27	13	97	4	141	30	2723	31	1	2785	5061
Apprch %	29.3	2.4	68.3	0		7.7	91.4	0.9	0		19.1	9.2	68.8	2.8		1.1	97.8	1.1	0		
Total %	1.2	0.1	2.8	0	4.1	2.9	34.8	0.4	0	38.1	0.5	0.3	1.9	0.1	2.8	0.6	53.8	0.6	0	55	
CARS/PEDESTRIANS	60	4	140	0	204	146	1728	16	0	1890	24	12	96	4	136	28	2701	31	1	2761	4991
% CARS/PEDESTRIANS	98.4	80	98.6	0	98.1	98.6	98.1	88.9	0	98.1	88.9	92.3	99	100	96.5	93.3	99.2	100	100	99.1	98.6
HEAVY VEHICLES	1	1	2	0	4	2	33	2	0	37	3	1	1	0	5	2	22	0	0	24	70
% HEAVY VEHICLES	1.6	20	1.4	0	1.9	1.4	1.9	11.1	0	1.9	11.1	7.7	1	0	3.5	6.7	0.8	0	0	0.9	1.4

City of Renton

1055 South Grady Way
Renton, WA 98057

File Name : TMC104P
Site Code : 00000104
Start Date : 09/09/2019
Page No : 2

	JEFFERSON AV NE From North					NE 3RD ST From East					JEFFERSON AV NE From South					NE 3RD ST From West					
Start Time	Right	Thru	Left	Peds	App. Total	Right	Thru	Left	Peds	App. Total	Right	Thru	Left	Peds	App. Total	Right	Thru	Left	Peds	App. Total	Int. Total
Peak Hour Analysis From 04:00 PM to 05:45 PM - Peak 1 of 1																					
Peak Hour for Entire Intersection Begins at 04:15 PM																					
04:15 PM	8	1	11	0	20	**26**	197	4	0	227	**11**	0	16	0	27	**5**	**379**	1	0	**385**	659
04:30 PM	3	**2**	18	0	23	17	240	**5**	0	262	2	3	22	0	27	4	327	1	0	332	644
04:45 PM	8	0	12	0	20	16	216	3	0	235	3	0	5	**1**	9	4	318	1	0	323	587
05:00 PM	**10**	**1**	**23**	0	**34**	20	**245**	0	0	**265**	6	**5**	**33**	**1**	**45**	1	375	**5**	0	381	**725**
Total Volume	29	4	64	0	97	79	898	12	0	989	22	8	76	2	108	14	1399	8	0	1421	2615
% App. Total	29.9	4.1	66	0		8	90.8	1.2	0		20.4	7.4	70.4	1.9		1	98.5	0.6	0		
PHF	.725	.500	.696	.000	.713	.760	.916	.600	.000	.933	.500	.400	.576	.500	.600	.700	.923	.400	.000	.923	.902
CARS/PEDESTRIANS	28	3	63	0	94	78	886	10	0	974	19	7	75	2	103	13	1388	8	0	1409	2580
% CARS/PEDESTRIANS	96.6	75.0	98.4	0	96.9	98.7	98.7	83.3	0	98.5	86.4	87.5	98.7	100	95.4	92.9	99.2	100	0	99.2	98.7
HEAVY VEHICLES	1	1	1	0	3	1	12	2	0	15	3	1	1	0	5	1	11	0	0	12	35
% HEAVY VEHICLES	3.4	25.0	1.6	0	3.1	1.3	1.3	16.7	0	1.5	13.6	12.5	1.3	0	4.6	7.1	0.8	0	0	0.8	1.3

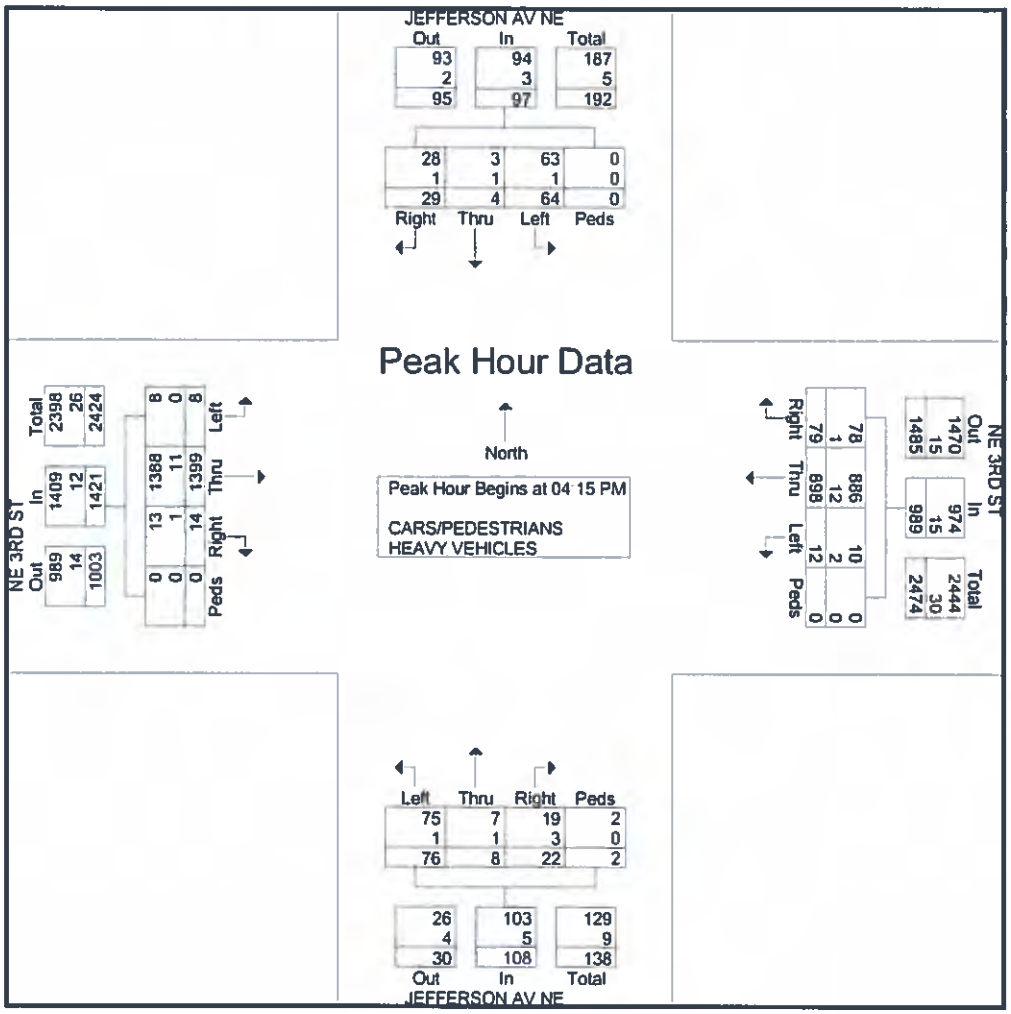

149th Ave SE
SR 169

Date: 05/04/2021
Count Period: 7:00 AM to 9:00 AM
Peak Hour: 7:30 AM to 8:30 AM

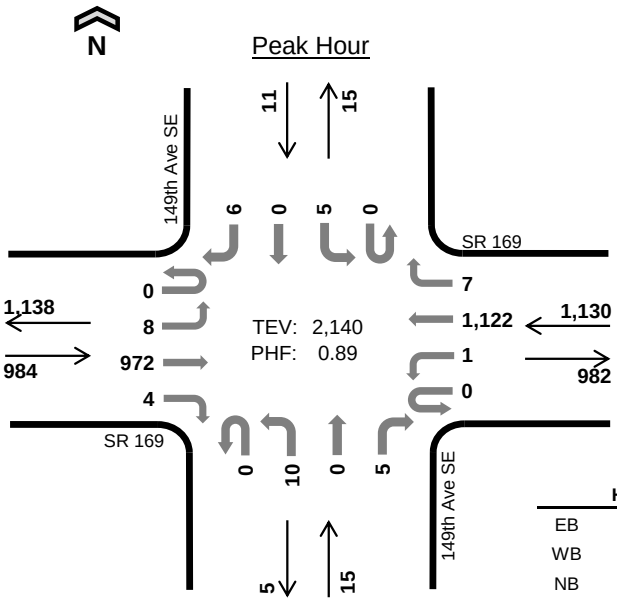

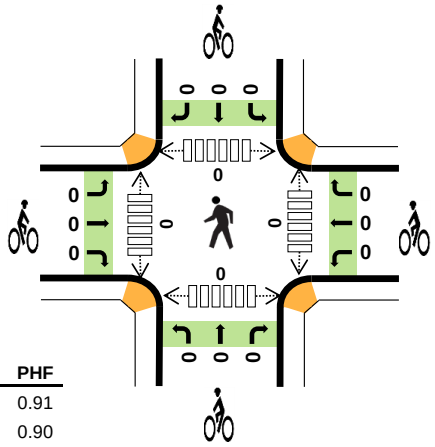

	HV %:	PHF
EB	6.9%	0.91
WB	7.8%	0.90
NB	6.7%	0.34
SB	18.2%	0.39
TOTAL	7.4%	0.89

Two-Hour Count Summaries

Interval Start		SR 169 Eastbound UT	LT	TH	RT	SR 169 Westbound UT	LT	TH	RT	149th Ave SE Northbound UT	LT	TH	RT	149th Ave SE Southbound UT	LT	TH	RT	15-min Total	Rolling One Hour
7:00 AM		0	0	186	0	0	1	272	0	0	1	0	1	0	3	0	0	464	0
7:15 AM		0	1	205	0	0	0	248	1	0	2	0	1	0	0	0	1	459	0
7:30 AM		**0**	**3**	**250**	**0**	**0**	**1**	**290**	**0**	**0**	**2**	**0**	**0**	**0**	**0**	**0**	**0**	**546**	0
7:45 AM		**0**	**3**	**220**	**1**	**0**	**0**	**283**	**3**	**0**	**2**	**0**	**0**	**0**	**0**	**0**	**1**	**513**	1,982
8:00 AM		**0**	**2**	**235**	**1**	**0**	**0**	**237**	**1**	**0**	**0**	**0**	**0**	**0**	**3**	**0**	**4**	**483**	2,001
8:15 AM		**0**	**0**	**267**	**2**	**0**	**0**	**312**	**3**	**0**	**6**	**0**	**5**	**0**	**2**	**0**	**1**	**598**	**2,140**
8:30 AM		0	2	203	2	0	1	279	2	0	2	0	0	0	2	0	4	497	2,091
8:45 AM		0	2	193	2	0	0	220	1	0	6	0	1	0	1	0	2	428	2,006
Count Total		0	13	1,759	8	0	3	2,141	11	0	21	0	8	0	11	0	13	3,988	0
Peak Hour	**All**	**0**	**8**	**972**	**4**	**0**	**1**	**1,122**	**7**	**0**	**10**	**0**	**5**	**0**	**5**	**0**	**6**	**2,140**	**0**
	HV	**0**	**0**	**67**	**1**	**0**	**0**	**87**	**1**	**0**	**0**	**0**	**1**	**0**	**1**	**0**	**1**	**159**	**0**
	HV%	**-**	**0%**	**7%**	**25%**	**-**	**0%**	**8%**	**14%**	**-**	**0%**	**-**	**20%**	**-**	**20%**	**-**	**17%**	**7%**	**0**

Note: Two-hour count summary volumes include heavy vehicles but exclude bicycles in overall count.

Interval Start	Heavy Vehicle Totals EB	WB	NB	SB	Total	Bicycles EB	WB	NB	SB	Total	Pedestrians (Crossing Leg) East	West	North	South	Total
7:00 AM	8	21	0	0	*29*	0	0	0	0	*0*	0	0	0	0	*0*
7:15 AM	17	28	0	0	*45*	0	0	0	0	*0*	0	0	0	0	*0*
7:30 AM	**15**	**30**	**0**	**0**	***45***	**0**	**0**	**0**	**0**	***0***	**0**	**0**	**0**	**0**	*0*
7:45 AM	**13**	**23**	**0**	**0**	***36***	**0**	**0**	**0**	**0**	***0***	**0**	**0**	**0**	**0**	*0*
8:00 AM	**20**	**16**	**0**	**1**	***37***	**0**	**0**	**0**	**0**	***0***	**0**	**0**	**0**	**0**	*0*
8:15 AM	**20**	**19**	**1**	**1**	***41***	**0**	**0**	**0**	**0**	***0***	**0**	**0**	**0**	**0**	***0***
8:30 AM	20	26	1	1	*48*	0	0	0	0	*0*	0	0	0	0	*0*
8:45 AM	24	20	1	1	*46*	0	0	0	0	*0*	0	0	0	0	*0*
Count Total	137	183	3	4	*327*	0	0	0	0	*0*	0	0	0	0	*0*
Peak Hour	**68**	**88**	**1**	**2**	***159***	**0**	**0**	**0**	**0**	***0***	**0**	**0**	**0**	**0**	***0***

Two-Hour Count Summaries - Heavy Vehicles

Interval Start	SR 169				SR 169				149th Ave SE				149th Ave SE				15-min Total	Rolling One Hour
	Eastbound				Westbound				Northbound				Southbound					
	UT	LT	TH	RT	UT	LT	TH	RT	UT	LT	TH	RT	UT	LT	TH	RT		
7:00 AM	0	0	8	0	0	0	21	0	0	0	0	0	0	0	0	0	29	0
7:15 AM	0	0	17	0	0	0	28	0	0	0	0	0	0	0	0	0	45	0
7:30 AM	**0**	**0**	**15**	**0**	**0**	**0**	**30**	**0**	**0**	**0**	**0**	**0**	**0**	**0**	**0**	**0**	**45**	0
7:45 AM	**0**	**0**	**13**	**0**	**0**	**0**	**22**	**1**	**0**	**0**	**0**	**0**	**0**	**0**	**0**	**0**	**36**	155
8:00 AM	**0**	**0**	**19**	**1**	**0**	**0**	**16**	**0**	**0**	**0**	**0**	**0**	**0**	**1**	**0**	**0**	**37**	163
8:15 AM	**0**	**0**	**20**	**0**	**0**	**0**	**19**	**0**	**0**	**0**	**0**	**1**	**0**	**0**	**0**	**1**	**41**	**159**
8:30 AM	0	0	19	1	0	1	25	0	0	1	0	0	0	0	0	1	48	162
8:45 AM	0	0	24	0	0	0	20	0	0	1	0	0	0	0	0	1	46	172
Count Total	0	0	135	2	0	1	181	1	0	2	0	1	0	1	0	3	327	0
Peak Hour	**0**	**0**	**67**	**1**	**0**	**0**	**87**	**1**	**0**	**0**	**0**	**1**	**0**	**1**	**0**	**1**	**159**	**0**

Two-Hour Count Summaries - Bikes

Interval Start	SR 169			SR 169			149th Ave SE			149th Ave SE			15-min Total	Rolling One Hour
	Eastbound			Westbound			Northbound			Southbound				
	LT	TH	RT	LT	TH	RT	LT	TH	RT	LT	TH	RT		
7:00 AM	0	0	0	0	0	0	0	0	0	0	0	0	0	0
7:15 AM	0	0	0	0	0	0	0	0	0	0	0	0	0	0
7:30 AM	**0**	**0**	**0**	**0**	**0**	**0**	**0**	**0**	**0**	**0**	**0**	**0**	**0**	0
7:45 AM	**0**	**0**	**0**	**0**	**0**	**0**	**0**	**0**	**0**	**0**	**0**	**0**	**0**	0
8:00 AM	**0**	**0**	**0**	**0**	**0**	**0**	**0**	**0**	**0**	**0**	**0**	**0**	**0**	0
8:15 AM	**0**	**0**	**0**	**0**	**0**	**0**	**0**	**0**	**0**	**0**	**0**	**0**	**0**	**0**
8:30 AM	0	0	0	0	0	0	0	0	0	0	0	0	0	0
8:45 AM	0	0	0	0	0	0	0	0	0	0	0	0	0	0
Count Total	0	0	0	0	0	0	0	0	0	0	0	0	0	0
Peak Hour	**0**	**0**	**0**	**0**	**0**	**0**	**0**	**0**	**0**	**0**	**0**	**0**	**0**	**0**

Note: U-Turn volumes for bikes are included in Left-Turn, if any.

149th Ave SE
SR 169

Date: 05/04/2021
Count Period: 11:00 AM to 1:00 PM
Peak Hour: 12:00 PM to 1:00 PM

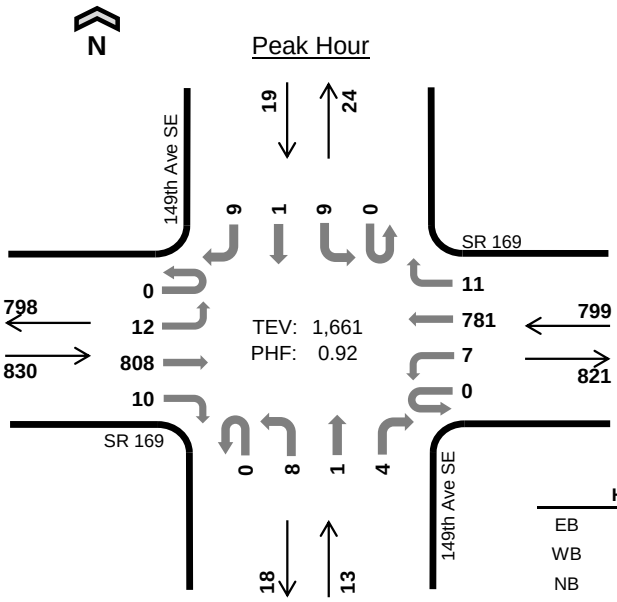

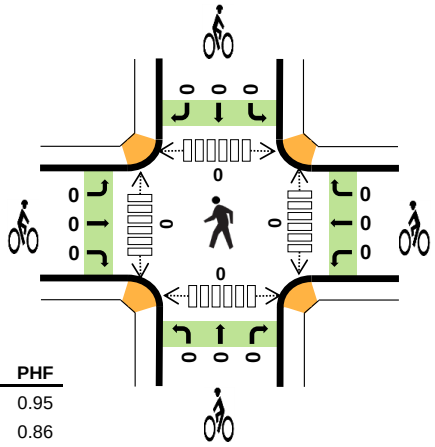

	HV %:	PHF
EB	8.0%	0.95
WB	6.5%	0.86
NB	7.7%	0.54
SB	5.3%	0.95
TOTAL	7.2%	0.92

Two-Hour Count Summaries

Interval Start		SR 169 Eastbound				SR 169 Westbound				149th Ave SE Northbound				149th Ave SE Southbound				15-min Total	Rolling One Hour
		UT	LT	TH	RT	UT	LT	TH	RT	UT	LT	TH	RT	UT	LT	TH	RT		
11:00 AM		0	3	166	1	0	0	165	1	0	2	0	1	0	2	0	0	341	0
11:15 AM		0	1	203	4	0	1	196	2	0	1	0	1	0	2	0	0	411	0
11:30 AM		0	2	190	1	0	2	195	1	0	2	0	3	0	2	0	0	398	0
11:45 AM		0	2	176	4	0	1	191	2	0	4	0	2	0	2	0	1	385	1,535
12:00 PM		**0**	**4**	**201**	**0**	**0**	**2**	**168**	**4**	**0**	**2**	**1**	**0**	**0**	**2**	**0**	**3**	**387**	1,581
12:15 PM		**0**	**5**	**190**	**4**	**0**	**2**	**196**	**2**	**0**	**1**	**0**	**0**	**0**	**1**	**1**	**3**	**405**	1,575
12:30 PM		**0**	**0**	**205**	**3**	**0**	**1**	**226**	**4**	**0**	**4**	**0**	**2**	**0**	**1**	**0**	**3**	**449**	1,626
12:45 PM		**0**	**3**	**212**	**3**	**0**	**2**	**191**	**1**	**0**	**1**	**0**	**2**	**0**	**5**	**0**	**0**	**420**	**1,661**
Count Total		0	20	1,543	20	0	11	1,528	17	0	17	1	11	0	17	1	10	3,196	0
Peak Hour	**All**	**0**	**12**	**808**	**10**	**0**	**7**	**781**	**11**	**0**	**8**	**1**	**4**	**0**	**9**	**1**	**9**	**1,661**	**0**
	HV	**0**	**0**	**66**	**0**	**0**	**0**	**52**	**0**	**0**	**0**	**0**	**1**	**0**	**1**	**0**	**0**	**120**	**0**
	HV%	**-**	**0%**	**8%**	**0%**	**-**	**0%**	**7%**	**0%**	**-**	**0%**	**0%**	**25%**	**-**	**11%**	**0%**	**0%**	**7%**	**0**

Note: Two-hour count summary volumes include heavy vehicles but exclude bicycles in overall count.

Interval Start	Heavy Vehicle Totals					Bicycles					Pedestrians (Crossing Leg)				
	EB	WB	NB	SB	Total	EB	WB	NB	SB	Total	East	West	North	South	Total
11:00 AM	17	16	0	1	*34*	0	0	0	3	*3*	0	0	0	0	*0*
11:15 AM	20	23	0	0	*43*	0	0	0	0	*0*	0	0	0	0	*0*
11:30 AM	13	18	0	0	*31*	0	0	0	0	*0*	0	0	0	0	*0*
11:45 AM	15	20	0	0	*35*	0	0	0	0	*0*	0	0	0	0	*0*
12:00 PM	**17**	**14**	**0**	**0**	***31***	**0**	**0**	**0**	**0**	***0***	**0**	**0**	**0**	**0**	*0*
12:15 PM	**15**	**12**	**0**	**0**	***27***	**0**	**0**	**0**	**0**	***0***	**0**	**0**	**0**	**0**	*0*
12:30 PM	**21**	**13**	**0**	**1**	***35***	**0**	**0**	**0**	**0**	***0***	**0**	**0**	**0**	**0**	*0*
12:45 PM	**13**	**13**	**1**	**0**	***27***	**0**	**0**	**0**	**0**	***0***	**0**	**0**	**0**	**0**	***0***
Count Total	131	129	1	2	*263*	0	0	0	3	*3*	0	0	0	0	*0*
Peak Hour	**66**	**52**	**1**	**1**	***120***	**0**	**0**	**0**	**0**	***0***	**0**	**0**	**0**	**0**	***0***

Two-Hour Count Summaries - Heavy Vehicles

Interval Start	SR 169				SR 169				149th Ave SE				149th Ave SE				15-min Total	Rolling One Hour
	Eastbound				Westbound				Northbound				Southbound					
	UT	LT	TH	RT	UT	LT	TH	RT	UT	LT	TH	RT	UT	LT	TH	RT		
11:00 AM	0	0	17	0	0	0	15	1	0	0	0	0	0	1	0	0	34	0
11:15 AM	0	0	20	0	0	0	23	0	0	0	0	0	0	0	0	0	43	0
11:30 AM	0	0	13	0	0	0	18	0	0	0	0	0	0	0	0	0	31	0
11:45 AM	0	0	15	0	0	0	20	0	0	0	0	0	0	0	0	0	35	143
12:00 PM	**0**	**0**	**17**	**0**	**0**	**0**	**14**	**0**	**0**	**0**	**0**	**0**	**0**	**0**	**0**	**0**	**31**	140
12:15 PM	**0**	**0**	**15**	**0**	**0**	**0**	**12**	**0**	**0**	**0**	**0**	**0**	**0**	**0**	**0**	**0**	**27**	124
12:30 PM	**0**	**0**	**21**	**0**	**0**	**0**	**13**	**0**	**0**	**0**	**0**	**0**	**0**	**1**	**0**	**0**	**35**	128
12:45 PM	**0**	**0**	**13**	**0**	**0**	**0**	**13**	**0**	**0**	**0**	**0**	**1**	**0**	**0**	**0**	**0**	**27**	**120**
Count Total	0	0	131	0	0	0	128	1	0	0	0	1	0	2	0	0	263	0
Peak Hour	**0**	**0**	**66**	**0**	**0**	**0**	**52**	**0**	**0**	**0**	**0**	**1**	**0**	**1**	**0**	**0**	**120**	**0**

Two-Hour Count Summaries - Bikes

Interval Start	SR 169			SR 169			149th Ave SE			149th Ave SE			15-min Total	Rolling One Hour
	Eastbound			Westbound			Northbound			Southbound				
	LT	TH	RT	LT	TH	RT	LT	TH	RT	LT	TH	RT		
11:00 AM	0	0	0	0	0	0	0	0	0	3	0	0	3	0
11:15 AM	0	0	0	0	0	0	0	0	0	0	0	0	0	0
11:30 AM	0	0	0	0	0	0	0	0	0	0	0	0	0	0
11:45 AM	0	0	0	0	0	0	0	0	0	0	0	0	0	3
12:00 PM	**0**	**0**	**0**	**0**	**0**	**0**	**0**	**0**	**0**	**0**	**0**	**0**	**0**	0
12:15 PM	**0**	**0**	**0**	**0**	**0**	**0**	**0**	**0**	**0**	**0**	**0**	**0**	**0**	0
12:30 PM	**0**	**0**	**0**	**0**	**0**	**0**	**0**	**0**	**0**	**0**	**0**	**0**	**0**	0
12:45 PM	**0**	**0**	**0**	**0**	**0**	**0**	**0**	**0**	**0**	**0**	**0**	**0**	**0**	**0**
Count Total	0	0	0	0	0	0	0	0	0	3	0	0	3	0
Peak Hour	**0**	**0**	**0**	**0**	**0**	**0**	**0**	**0**	**0**	**0**	**0**	**0**	**0**	**0**

Note: U-Turn volumes for bikes are included in Left-Turn, if any.

149th Ave SE
SR 169

Date: 05/04/2021
Count Period: 4:00 PM to 6:00 PM
Peak Hour: 4:30 PM to 5:30 PM

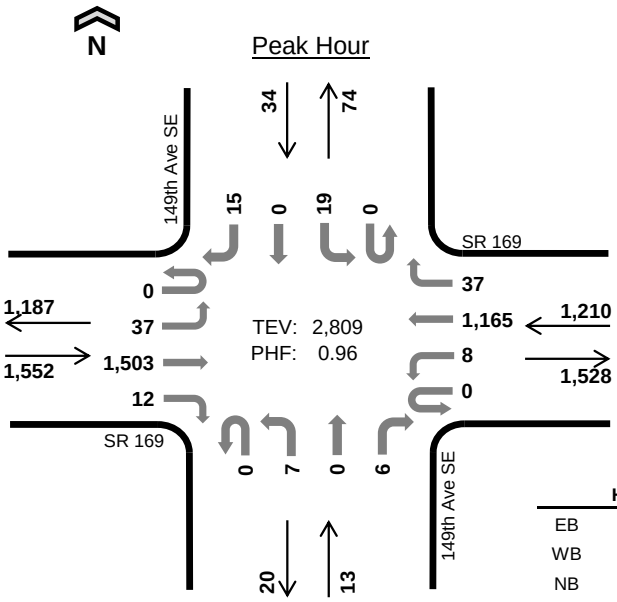

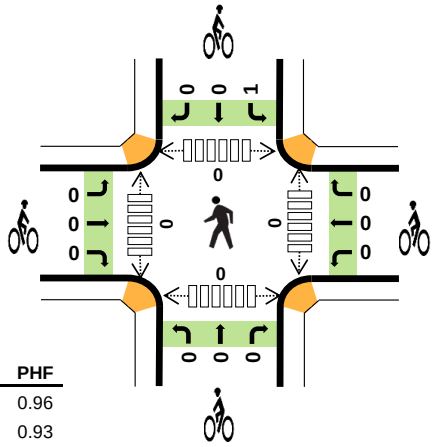

	HV %:	PHF
EB	2.6%	0.96
WB	1.8%	0.93
NB	7.7%	0.65
SB	0.0%	0.53
TOTAL	2.3%	0.96

Two-Hour Count Summaries

Interval Start		SR 169 Eastbound UT	LT	TH	RT	SR 169 Westbound UT	LT	TH	RT	149th Ave SE Northbound UT	LT	TH	RT	149th Ave SE Southbound UT	LT	TH	RT	15-min Total	Rolling One Hour
4:00 PM		0	3	332	3	0	2	279	5	0	4	0	1	0	2	0	2	633	0
4:15 PM		0	8	361	6	0	1	283	14	0	0	0	1	0	2	0	3	679	0
4:30 PM		**0**	**10**	**378**	**4**	**0**	**1**	**279**	**3**	**0**	**3**	**0**	**1**	**0**	**3**	**0**	**3**	**685**	0
4:45 PM		**0**	**6**	**398**	**2**	**0**	**3**	**305**	**11**	**0**	**1**	**0**	**1**	**0**	**2**	**0**	**3**	**732**	2,729
5:00 PM		**0**	**11**	**376**	**5**	**0**	**3**	**269**	**12**	**0**	**3**	**0**	**2**	**0**	**12**	**0**	**4**	**697**	2,793
5:15 PM		**0**	**10**	**351**	**1**	**0**	**1**	**312**	**11**	**0**	**0**	**0**	**2**	**0**	**2**	**0**	**5**	**695**	**2,809**
5:30 PM		0	12	342	0	0	1	255	14	0	1	0	1	0	22	0	11	659	2,783
5:45 PM		0	11	301	2	0	1	238	13	0	1	0	0	0	5	0	1	573	2,624
Count Total		0	71	2,839	23	0	13	2,220	83	0	13	0	9	0	50	0	32	5,353	0
Peak Hour	**All**	**0**	**37**	**1,503**	**12**	**0**	**8**	**1,165**	**37**	**0**	**7**	**0**	**6**	**0**	**19**	**0**	**15**	**2,809**	**0**
	HV	**0**	**0**	**41**	**0**	**0**	**0**	**22**	**0**	**0**	**1**	**0**	**0**	**0**	**0**	**0**	**0**	**64**	**0**
	HV%	**-**	**0%**	**3%**	**0%**	**-**	**0%**	**2%**	**0%**	**-**	**14%**	**-**	**0%**	**-**	**0%**	**-**	**0%**	**2%**	**0**

Note: Two-hour count summary volumes include heavy vehicles but exclude bicycles in overall count.

Interval Start	Heavy Vehicle Totals EB	WB	NB	SB	Total	Bicycles EB	WB	NB	SB	Total	Pedestrians (Crossing Leg) East	West	North	South	Total
4:00 PM	11	6	0	0	*17*	0	0	0	0	*0*	0	0	0	0	*0*
4:15 PM	9	7	0	0	*16*	0	0	0	3	*3*	0	0	0	0	*0*
4:30 PM	**11**	**4**	**1**	**0**	***16***	**0**	**0**	**0**	**0**	***0***	**0**	**0**	**0**	**0**	*0*
4:45 PM	**10**	**3**	**0**	**0**	***13***	**0**	**0**	**0**	**0**	***0***	**0**	**0**	**0**	**0**	*0*
5:00 PM	**11**	**9**	**0**	**0**	***20***	**0**	**0**	**0**	**1**	***1***	**0**	**0**	**0**	**0**	*0*
5:15 PM	**9**	**6**	**0**	**0**	***15***	**0**	**0**	**0**	**0**	***0***	**0**	**0**	**0**	**0**	***0***
5:30 PM	4	2	0	0	*6*	0	0	0	0	*0*	0	0	0	0	*0*
5:45 PM	4	5	0	0	*9*	0	0	1	0	*1*	0	0	0	0	*0*
Count Total	69	42	1	0	*112*	0	0	1	4	*5*	0	0	0	0	*0*
Peak Hour	**41**	**22**	**1**	**0**	***64***	**0**	**0**	**0**	**1**	***1***	**0**	**0**	**0**	**0**	***0***

Two-Hour Count Summaries - Heavy Vehicles

Interval Start	SR 169				SR 169				149th Ave SE				149th Ave SE				15-min Total	Rolling One Hour
	Eastbound				Westbound				Northbound				Southbound					
	UT	LT	TH	RT	UT	LT	TH	RT	UT	LT	TH	RT	UT	LT	TH	RT		
4:00 PM	0	0	11	0	0	0	6	0	0	0	0	0	0	0	0	0	17	0
4:15 PM	0	0	9	0	0	0	7	0	0	0	0	0	0	0	0	0	16	0
4:30 PM	**0**	**0**	**11**	**0**	**0**	**0**	**4**	**0**	**0**	**1**	**0**	**0**	**0**	**0**	**0**	**0**	**16**	0
4:45 PM	**0**	**0**	**10**	**0**	**0**	**0**	**3**	**0**	**0**	**0**	**0**	**0**	**0**	**0**	**0**	**0**	**13**	62
5:00 PM	**0**	**0**	**11**	**0**	**0**	**0**	**9**	**0**	**0**	**0**	**0**	**0**	**0**	**0**	**0**	**0**	**20**	65
5:15 PM	**0**	**0**	**9**	**0**	**0**	**0**	**6**	**0**	**0**	**0**	**0**	**0**	**0**	**0**	**0**	**0**	**15**	**64**
5:30 PM	0	0	4	0	0	0	2	0	0	0	0	0	0	0	0	0	6	54
5:45 PM	0	0	4	0	0	0	4	1	0	0	0	0	0	0	0	0	9	50
Count Total	0	0	69	0	0	0	41	1	0	1	0	0	0	0	0	0	112	0
Peak Hour	**0**	**0**	**41**	**0**	**0**	**0**	**22**	**0**	**0**	**1**	**0**	**0**	**0**	**0**	**0**	**0**	**64**	**0**

Two-Hour Count Summaries - Bikes

Interval Start	SR 169			SR 169			149th Ave SE			149th Ave SE			15-min Total	Rolling One Hour
	Eastbound			Westbound			Northbound			Southbound				
	LT	TH	RT	LT	TH	RT	LT	TH	RT	LT	TH	RT		
4:00 PM	0	0	0	0	0	0	0	0	0	0	0	0	0	0
4:15 PM	0	0	0	0	0	0	0	0	0	3	0	0	3	0
4:30 PM	**0**	**0**	**0**	**0**	**0**	**0**	**0**	**0**	**0**	**0**	**0**	**0**	**0**	0
4:45 PM	**0**	**0**	**0**	**0**	**0**	**0**	**0**	**0**	**0**	**0**	**0**	**0**	**0**	3
5:00 PM	**0**	**0**	**0**	**0**	**0**	**0**	**0**	**0**	**0**	**1**	**0**	**0**	**1**	4
5:15 PM	**0**	**0**	**0**	**0**	**0**	**0**	**0**	**0**	**0**	**0**	**0**	**0**	**0**	**1**
5:30 PM	0	0	0	0	0	0	0	0	0	0	0	0	0	1
5:45 PM	0	0	0	0	0	0	1	0	0	0	0	0	1	2
Count Total	0	0	0	0	0	0	1	0	0	4	0	0	5	0
Peak Hour	**0**	**0**	**0**	**0**	**0**	**0**	**0**	**0**	**0**	**1**	**0**	**0**	**1**	**0**

Note: U-Turn volumes for bikes are included in Left-Turn, if any.

Issaquah-Horbart Rd SE
SE May Valley Rd

Date: 02-23-2021
Count Period: 7:00 AM to 9:00 AM
Peak Hour: 7:15 AM to 8:15 AM

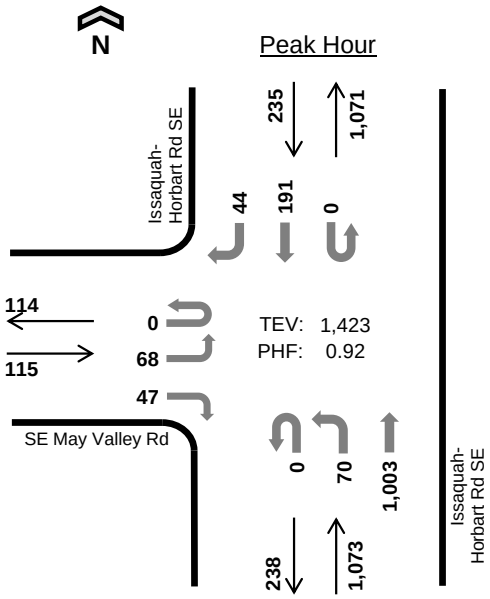

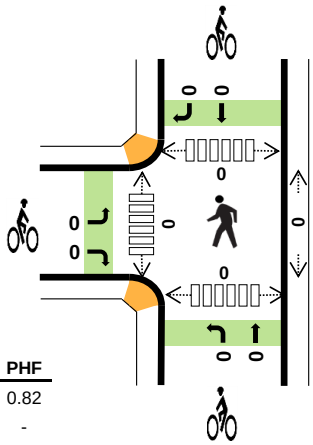

	HV %:	PHF
EB	9.6%	0.82
WB	-	-
NB	2.5%	0.92
SB	8.5%	0.80
TOTAL	4.1%	0.92

Two-Hour Count Summaries

Interval Start		SE May Valley Rd Eastbound UT	LT	TH	RT	0 Westbound UT	LT	TH	RT	Issaquah-Horbart Rd SE Northbound UT	LT	TH	RT	Issaquah-Horbart Rd SE Southbound UT	LT	TH	RT	15-min Total	Rolling One Hour
7:00 AM		0	11	0	7	0	0	0	0	0	10	249	0	0	0	30	5	312	0
7:15 AM		**0**	**14**	**0**	**5**	**0**	**0**	**0**	**0**	**0**	**12**	**267**	**0**	**0**	**0**	**37**	**7**	**342**	0
7:30 AM		**0**	**18**	**0**	**11**	**0**	**0**	**0**	**0**	**0**	**21**	**272**	**0**	**0**	**0**	**58**	**7**	**387**	0
7:45 AM		**0**	**22**	**0**	**13**	**0**	**0**	**0**	**0**	**0**	**19**	**257**	**0**	**0**	**0**	**42**	**11**	**364**	1,405
8:00 AM		**0**	**14**	**0**	**18**	**0**	**0**	**0**	**0**	**0**	**18**	**207**	**0**	**0**	**0**	**54**	**19**	**330**	**1,423**
8:15 AM		0	21	0	12	0	0	0	0	0	30	193	0	0	0	58	12	326	1,407
8:30 AM		0	20	0	10	0	0	0	0	0	34	211	0	0	0	52	17	344	1,364
8:45 AM		0	19	0	17	0	0	0	0	0	19	162	0	0	0	44	12	273	1,273
Count Total		0	139	0	93	0	0	0	0	0	163	1,818	0	0	0	375	90	2,678	0
Peak Hour	**All**	**0**	**68**	**0**	**47**	**0**	**0**	**0**	**0**	**0**	**70**	**1,003**	**0**	**0**	**0**	**191**	**44**	**1,423**	**0**
	HV	**0**	**2**	**0**	**9**	**0**	**0**	**0**	**0**	**0**	**11**	**16**	**0**	**0**	**0**	**6**	**14**	**58**	**0**
	HV%	**-**	**3%**	**-**	**19%**	**-**	**-**	**-**	**-**	**-**	**16%**	**2%**	**-**	**-**	**-**	**3%**	**32%**	**4%**	**0**

Note: Two-hour count summary volumes include heavy vehicles but exclude bicycles in overall count.

Interval Start	Heavy Vehicle Totals EB	WB	NB	SB	Total	Bicycles EB	WB	NB	SB	Total	Pedestrians (Crossing Leg) East	West	North	South	Total
7:00 AM	0	0	2	3	*5*	0	0	0	0	*0*	0	0	0	0	*0*
7:15 AM	**1**	**0**	**8**	**1**	***10***	**0**	**0**	**0**	**0**	***0***	**0**	**0**	**0**	**0**	*0*
7:30 AM	**0**	**0**	**7**	**2**	***9***	**0**	**0**	**0**	**0**	***0***	**0**	**0**	**0**	**0**	*0*
7:45 AM	**4**	**0**	**7**	**3**	***14***	**0**	**0**	**0**	**0**	***0***	**0**	**0**	**0**	**0**	*0*
8:00 AM	**6**	**0**	**5**	**14**	***25***	**0**	**0**	**0**	**0**	***0***	**0**	**0**	**0**	**0**	***0***
8:15 AM	4	0	5	7	*16*	0	0	0	0	*0*	0	0	0	0	*0*
8:30 AM	4	0	8	4	*16*	0	0	0	0	*0*	0	0	0	0	*0*
8:45 AM	5	0	3	1	*9*	0	0	0	0	*0*	0	0	0	0	*0*
Count Total	24	0	45	35	*104*	0	0	0	0	*0*	0	0	0	0	*0*
Peak Hr	**11**	**0**	**27**	**20**	***58***	**0**	**0**	**0**	**0**	***0***	**0**	**0**	**0**	**0**	***0***

Two-Hour Count Summaries - Heavy Vehicles

Interval Start	SE May Valley Rd				0				Issaquah-Horbart Rd SE				Issaquah-Horbart Rd SE				15-min Total	Rolling One Hour
	Eastbound				Westbound				Northbound				Southbound					
	UT	LT	TH	RT	UT	LT	TH	RT	UT	LT	TH	RT	UT	LT	TH	RT		
7:00 AM	0	0	0	0	0	0	0	0	0	0	2	0	0	0	3	0	5	0
7:15 AM	**0**	**1**	**0**	**0**	**0**	**0**	**0**	**0**	**0**	**3**	**5**	**0**	**0**	**0**	**0**	**1**	**10**	0
7:30 AM	**0**	**0**	**0**	**0**	**0**	**0**	**0**	**0**	**0**	**4**	**3**	**0**	**0**	**0**	**2**	**0**	**9**	0
7:45 AM	**0**	**0**	**0**	**4**	**0**	**0**	**0**	**0**	**0**	**2**	**5**	**0**	**0**	**0**	**2**	**1**	**14**	38
8:00 AM	**0**	**1**	**0**	**5**	**0**	**0**	**0**	**0**	**0**	**2**	**3**	**0**	**0**	**0**	**2**	**12**	**25**	**58**
8:15 AM	0	0	0	4	0	0	0	0	0	1	4	0	0	0	1	6	16	64
8:30 AM	0	2	0	2	0	0	0	0	0	7	1	0	0	0	2	2	16	71
8:45 AM	0	1	0	4	0	0	0	0	0	1	2	0	0	0	1	0	9	66
Count Total	0	5	0	19	0	0	0	0	0	20	25	0	0	0	13	22	104	0
Peak Hour	**0**	**2**	**0**	**9**	**0**	**0**	**0**	**0**	**0**	**11**	**16**	**0**	**0**	**0**	**6**	**14**	**58**	**0**

Two-Hour Count Summaries - Bikes

Interval Start	SE May Valley Rd			0			Issaquah-Horbart Rd SE			Issaquah-Horbart Rd SE			15-min Total	Rolling One Hour
	Eastbound			Westbound			Northbound			Southbound				
	LT	TH	RT	LT	TH	RT	LT	TH	RT	LT	TH	RT		
7:00 AM	0	0	0	0	0	0	0	0	0	0	0	0	0	0
7:15 AM	**0**	**0**	**0**	**0**	**0**	**0**	**0**	**0**	**0**	**0**	**0**	**0**	**0**	0
7:30 AM	**0**	**0**	**0**	**0**	**0**	**0**	**0**	**0**	**0**	**0**	**0**	**0**	**0**	0
7:45 AM	**0**	**0**	**0**	**0**	**0**	**0**	**0**	**0**	**0**	**0**	**0**	**0**	**0**	0
8:00 AM	**0**	**0**	**0**	**0**	**0**	**0**	**0**	**0**	**0**	**0**	**0**	**0**	**0**	**0**
8:15 AM	0	0	0	0	0	0	0	0	0	0	0	0	0	0
8:30 AM	0	0	0	0	0	0	0	0	0	0	0	0	0	0
8:45 AM	0	0	0	0	0	0	0	0	0	0	0	0	0	0
Count Total	0	0	0	0	0	0	0	0	0	0	0	0	0	0
Peak Hour	**0**	**0**	**0**	**0**	**0**	**0**	**0**	**0**	**0**	**0**	**0**	**0**	**0**	**0**

Note: U-Turn volumes for bikes are included in Left-Turn, if any.

Issaquah-Horbart Rd SE
SE May Valley Rd

Date: 02-23-2021
Count Period: 11:00 AM to 1:00 PM
Peak Hour: 11:30 AM to 12:30 PM

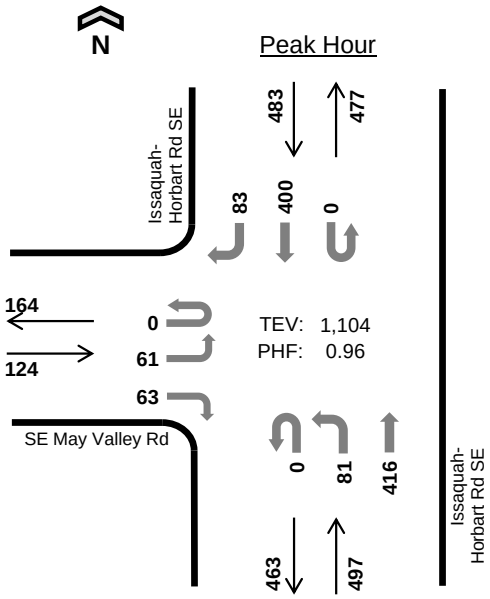

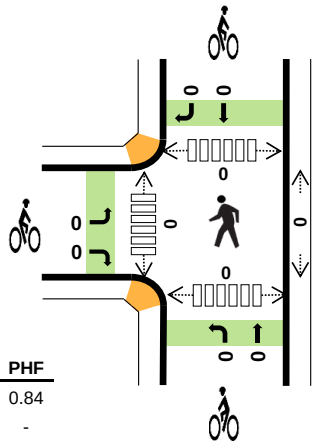

	HV %:	PHF
EB	8.1%	0.84
WB	-	-
NB	5.0%	0.83
SB	5.8%	0.88
TOTAL	5.7%	0.96

Two-Hour Count Summaries

Interval Start		SE May Valley Rd Eastbound UT	LT	TH	RT	0 Westbound UT	LT	TH	RT	Issaquah-Horbart Rd SE Northbound UT	LT	TH	RT	Issaquah-Horbart Rd SE Southbound UT	LT	TH	RT	15-min Total	Rolling One Hour
11:00 AM		0	17	0	9	0	0	0	0	0	14	120	0	0	0	69	20	249	0
11:15 AM		0	12	0	22	0	0	0	0	0	14	114	0	0	0	90	12	264	0
11:30 AM		**0**	**14**	**0**	**16**	**0**	**0**	**0**	**0**	**0**	**22**	**128**	**0**	**0**	**0**	**79**	**13**	**272**	0
11:45 AM		**0**	**17**	**0**	**20**	**0**	**0**	**0**	**0**	**0**	**19**	**95**	**0**	**0**	**0**	**98**	**25**	**274**	1,059
12:00 PM		**0**	**12**	**0**	**14**	**0**	**0**	**0**	**0**	**0**	**16**	**96**	**0**	**0**	**0**	**110**	**21**	**269**	1,079
12:15 PM		**0**	**18**	**0**	**13**	**0**	**0**	**0**	**0**	**0**	**24**	**97**	**0**	**0**	**0**	**113**	**24**	**289**	**1,104**
12:30 PM		0	14	0	29	0	0	0	0	0	19	87	0	0	0	97	14	260	1,092
12:45 PM		0	20	0	29	0	0	0	0	0	16	87	0	0	0	101	7	260	1,078
Count Total		0	124	0	152	0	0	0	0	0	144	824	0	0	0	757	136	2,137	0
Peak Hour	**All**	**0**	**61**	**0**	**63**	**0**	**0**	**0**	**0**	**0**	**81**	**416**	**0**	**0**	**0**	**400**	**83**	**1,104**	**0**
	HV	**0**	**0**	**0**	**10**	**0**	**0**	**0**	**0**	**0**	**15**	**10**	**0**	**0**	**0**	**9**	**19**	**63**	**0**
	HV%	**-**	**0%**	**-**	**16%**	**-**	**-**	**-**	**-**	**-**	**19%**	**2%**	**-**	**-**	**-**	**2%**	**23%**	**6%**	**0**

Note: Two-hour count summary volumes include heavy vehicles but exclude bicycles in overall count.

Interval Start	Heavy Vehicle Totals EB	WB	NB	SB	Total	Bicycles EB	WB	NB	SB	Total	Pedestrians (Crossing Leg) East	West	North	South	Total
11:00 AM	2	0	4	5	*11*	0	0	0	0	*0*	0	0	0	0	*0*
11:15 AM	7	0	6	3	*16*	0	0	0	0	*0*	0	0	0	0	*0*
11:30 AM	**5**	**0**	**7**	**2**	***14***	**0**	**0**	**0**	**0**	***0***	**0**	**0**	**0**	**0**	*0*
11:45 AM	**3**	**0**	**5**	**13**	***21***	**0**	**0**	**0**	**0**	***0***	**0**	**0**	**0**	**0**	*0*
12:00 PM	**0**	**0**	**8**	**10**	***18***	**0**	**0**	**0**	**0**	***0***	**0**	**0**	**0**	**0**	*0*
12:15 PM	**2**	**0**	**5**	**3**	***10***	**0**	**0**	**0**	**0**	***0***	**0**	**0**	**0**	**0**	***0***
12:30 PM	2	0	4	2	*8*	0	0	0	0	*0*	0	0	0	0	*0*
12:45 PM	17	0	10	2	*29*	0	0	0	0	*0*	0	0	0	0	*0*
Count Total	38	0	49	40	*127*	0	0	0	0	*0*	0	0	0	0	*0*
Peak Hr	**10**	**0**	**25**	**28**	***63***	**0**	**0**	**0**	**0**	***0***	**0**	**0**	**0**	**0**	***0***

Two-Hour Count Summaries - Heavy Vehicles

Interval Start	SE May Valley Rd				0				Issaquah-Horbart Rd SE				Issaquah-Horbart Rd SE				15-min Total	Rolling One Hour
	Eastbound				Westbound				Northbound				Southbound					
	UT	LT	TH	RT	UT	LT	TH	RT	UT	LT	TH	RT	UT	LT	TH	RT		
11:00 AM	0	0	0	2	0	0	0	0	0	2	2	0	0	0	3	2	11	0
11:15 AM	0	0	0	7	0	0	0	0	0	2	4	0	0	0	3	0	16	0
11:30 AM	**0**	**0**	**0**	**5**	**0**	**0**	**0**	**0**	**0**	**4**	**3**	**0**	**0**	**0**	**2**	**0**	**14**	0
11:45 AM	**0**	**0**	**0**	**3**	**0**	**0**	**0**	**0**	**0**	**3**	**2**	**0**	**0**	**0**	**3**	**10**	**21**	62
12:00 PM	**0**	**0**	**0**	**0**	**0**	**0**	**0**	**0**	**0**	**3**	**5**	**0**	**0**	**0**	**2**	**8**	**18**	69
12:15 PM	**0**	**0**	**0**	**2**	**0**	**0**	**0**	**0**	**0**	**5**	**0**	**0**	**0**	**0**	**2**	**1**	**10**	**63**
12:30 PM	0	0	0	2	0	0	0	0	0	3	1	0	0	0	2	0	8	57
12:45 PM	0	7	0	10	0	0	0	0	0	5	5	0	0	0	2	0	29	65
Count Total	0	7	0	31	0	0	0	0	0	27	22	0	0	0	19	21	127	0
Peak Hour	**0**	**0**	**0**	**10**	**0**	**0**	**0**	**0**	**0**	**15**	**10**	**0**	**0**	**0**	**9**	**19**	**63**	**0**

Two-Hour Count Summaries - Bikes

Interval Start	SE May Valley Rd			0			Issaquah-Horbart Rd SE			Issaquah-Horbart Rd SE			15-min Total	Rolling One Hour
	Eastbound			Westbound			Northbound			Southbound				
	LT	TH	RT	LT	TH	RT	LT	TH	RT	LT	TH	RT		
11:00 AM	0	0	0	0	0	0	0	0	0	0	0	0	0	0
11:15 AM	0	0	0	0	0	0	0	0	0	0	0	0	0	0
11:30 AM	**0**	**0**	**0**	**0**	**0**	**0**	**0**	**0**	**0**	**0**	**0**	**0**	**0**	0
11:45 AM	**0**	**0**	**0**	**0**	**0**	**0**	**0**	**0**	**0**	**0**	**0**	**0**	**0**	0
12:00 PM	**0**	**0**	**0**	**0**	**0**	**0**	**0**	**0**	**0**	**0**	**0**	**0**	**0**	0
12:15 PM	**0**	**0**	**0**	**0**	**0**	**0**	**0**	**0**	**0**	**0**	**0**	**0**	**0**	**0**
12:30 PM	0	0	0	0	0	0	0	0	0	0	0	0	0	0
12:45 PM	0	0	0	0	0	0	0	0	0	0	0	0	0	0
Count Total	0	0	0	0	0	0	0	0	0	0	0	0	0	0
Peak Hour	**0**	**0**	**0**	**0**	**0**	**0**	**0**	**0**	**0**	**0**	**0**	**0**	**0**	**0**

Note: U-Turn volumes for bikes are included in Left-Turn, if any.

Issaquah-Horbart Rd SE
SE May Valley Rd

Date: 02-23-2021
Count Period: 4:00 PM to 6:00 PM
Peak Hour: 4:00 PM to 5:00 PM

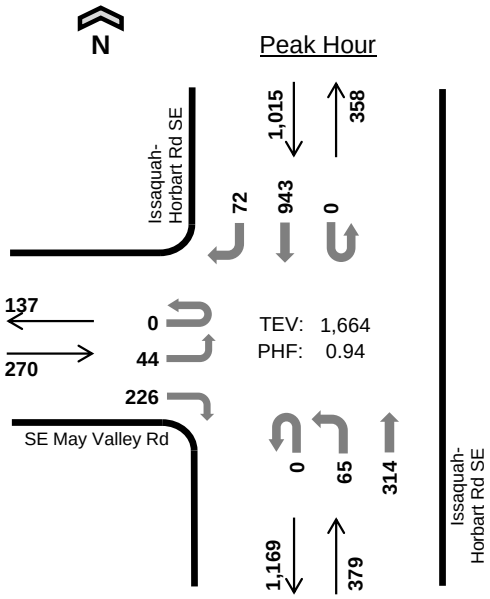

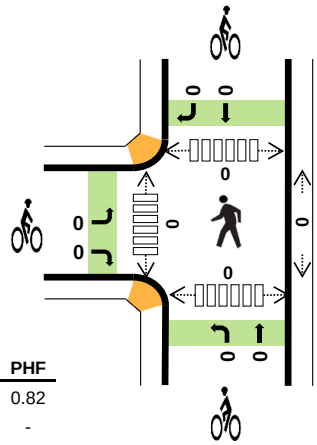

	HV %:	PHF
EB	3.0%	0.82
WB	-	-
NB	0.8%	0.94
SB	0.9%	0.94
TOTAL	1.2%	0.94

Two-Hour Count Summaries

Interval Start		SE May Valley Rd Eastbound UT	LT	TH	RT	0 Westbound UT	LT	TH	RT	Issaquah-Horbart Rd SE Northbound UT	LT	TH	RT	Issaquah-Horbart Rd SE Southbound UT	LT	TH	RT	15-min Total	Rolling One Hour
4:00 PM		0	10	0	72	0	0	0	0	0	25	65	0	0	0	229	18	419	0
4:15 PM		0	10	0	61	0	0	0	0	0	13	80	0	0	0	225	20	409	0
4:30 PM		0	14	0	58	0	0	0	0	0	8	93	0	0	0	253	18	444	0
4:45 PM		0	10	0	35	0	0	0	0	0	19	76	0	0	0	236	16	392	1,664
5:00 PM		0	14	0	47	0	0	0	0	0	19	82	0	0	0	216	17	395	1,640
5:15 PM		0	13	0	31	0	0	0	0	0	14	84	0	0	0	232	18	392	1,623
5:30 PM		0	10	0	43	0	0	0	0	0	13	62	0	0	0	238	16	382	1,561
5:45 PM		0	6	0	52	0	0	0	0	0	12	56	0	0	0	222	22	370	1,539
Count Total		0	87	0	399	0	0	0	0	0	123	598	0	0	0	1,851	145	3,203	0
Peak Hour	All	0	44	0	226	0	0	0	0	0	65	314	0	0	0	943	72	1,664	0
	HV	0	1	0	7	0	0	0	0	0	0	3	0	0	0	8	1	20	0
	HV%	-	2%	-	3%	-	-	-	-	-	0%	1%	-	-	-	1%	1%	1%	0

Note: Two-hour count summary volumes include heavy vehicles but exclude bicycles in overall count.

Interval Start	Heavy Vehicle Totals EB	WB	NB	SB	Total	Bicycles EB	WB	NB	SB	Total	Pedestrians (Crossing Leg) East	West	North	South	Total
4:00 PM	4	0	0	2	6	0	0	0	0	0	0	0	0	0	0
4:15 PM	3	0	0	0	3	0	0	0	0	0	0	0	0	0	0
4:30 PM	1	0	1	4	6	0	0	0	0	0	0	0	0	0	0
4:45 PM	0	0	2	3	5	0	0	0	0	0	0	0	0	0	0
5:00 PM	0	0	1	4	5	0	0	0	0	0	0	0	0	0	0
5:15 PM	1	0	1	0	2	0	0	0	1	1	0	0	0	0	0
5:30 PM	0	0	0	0	0	0	0	0	0	0	0	0	0	0	0
5:45 PM	1	0	2	1	4	0	0	0	0	0	0	0	0	0	0
Count Total	10	0	7	14	31	0	0	0	1	1	0	0	0	0	0
Peak Hr	8	0	3	9	20	0	0	0	0	0	0	0	0	0	0

Two-Hour Count Summaries - Heavy Vehicles

Interval Start	SE May Valley Rd				0				Issaquah-Horbart Rd SE				Issaquah-Horbart Rd SE				15-min Total	Rolling One Hour
	Eastbound				Westbound				Northbound				Southbound					
	UT	LT	TH	RT	UT	LT	TH	RT	UT	LT	TH	RT	UT	LT	TH	RT		
4:00 PM	**0**	**1**	**0**	**3**	**0**	**0**	**0**	**0**	**0**	**0**	**0**	**0**	**0**	**0**	**1**	**1**	**6**	0
4:15 PM	**0**	**0**	**0**	**3**	**0**	**0**	**0**	**0**	**0**	**0**	**0**	**0**	**0**	**0**	**0**	**0**	**3**	0
4:30 PM	**0**	**0**	**0**	**1**	**0**	**0**	**0**	**0**	**0**	**0**	**1**	**0**	**0**	**0**	**4**	**0**	**6**	0
4:45 PM	**0**	**0**	**0**	**0**	**0**	**0**	**0**	**0**	**0**	**0**	**2**	**0**	**0**	**0**	**3**	**0**	**5**	**20**
5:00 PM	0	0	0	0	0	0	0	0	0	0	1	0	0	0	4	0	5	19
5:15 PM	0	1	0	0	0	0	0	0	0	0	1	0	0	0	0	0	2	18
5:30 PM	0	0	0	0	0	0	0	0	0	0	0	0	0	0	0	0	0	12
5:45 PM	0	0	0	1	0	0	0	0	0	0	2	0	0	0	1	0	4	11
Count Total	0	2	0	8	0	0	0	0	0	0	7	0	0	0	13	1	31	0
Peak Hour	**0**	**1**	**0**	**7**	**0**	**0**	**0**	**0**	**0**	**0**	**3**	**0**	**0**	**0**	**8**	**1**	**20**	**0**

Two-Hour Count Summaries - Bikes

Interval Start	SE May Valley Rd			0			Issaquah-Horbart Rd SE			Issaquah-Horbart Rd SE			15-min Total	Rolling One Hour
	Eastbound			Westbound			Northbound			Southbound				
	LT	TH	RT	LT	TH	RT	LT	TH	RT	LT	TH	RT		
4:00 PM	**0**	**0**	**0**	**0**	**0**	**0**	**0**	**0**	**0**	**0**	**0**	**0**	**0**	0
4:15 PM	**0**	**0**	**0**	**0**	**0**	**0**	**0**	**0**	**0**	**0**	**0**	**0**	**0**	0
4:30 PM	**0**	**0**	**0**	**0**	**0**	**0**	**0**	**0**	**0**	**0**	**0**	**0**	**0**	0
4:45 PM	**0**	**0**	**0**	**0**	**0**	**0**	**0**	**0**	**0**	**0**	**0**	**0**	**0**	**0**
5:00 PM	0	0	0	0	0	0	0	0	0	0	0	0	0	0
5:15 PM	0	0	0	0	0	0	0	0	0	0	0	1	1	1
5:30 PM	0	0	0	0	0	0	0	0	0	0	0	0	0	1
5:45 PM	0	0	0	0	0	0	0	0	0	0	0	0	0	1
Count Total	0	0	0	0	0	0	0	0	0	0	0	1	1	0
Peak Hour	**0**	**0**	**0**	**0**	**0**	**0**	**0**	**0**	**0**	**0**	**0**	**0**	**0**	**0**

Note: U-Turn volumes for bikes are included in Left-Turn, if any.

Issaquah-Horbart Rd SE
Cedar Grover Rd SE

Date: 02-23-2021
Count Period: 7:00 AM to 9:00 AM
Peak Hour: 7:00 AM to 8:00 AM

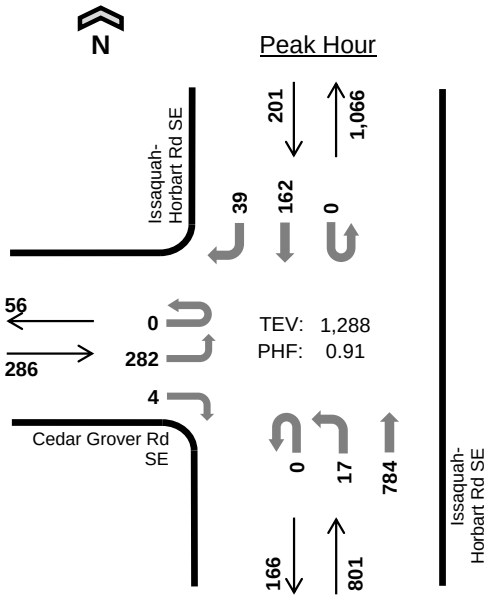

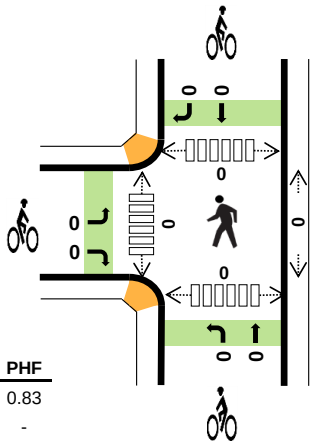

	HV %:	PHF
EB	1.7%	0.83
WB	-	-
NB	3.0%	0.88
SB	5.0%	0.77
TOTAL	3.0%	0.91

Two-Hour Count Summaries

Interval Start		Cedar Grover Rd SE Eastbound UT	LT	TH	RT	0 Westbound UT	LT	TH	RT	Issaquah-Horbart Rd SE Northbound UT	LT	TH	RT	Issaquah-Horbart Rd SE Southbound UT	LT	TH	RT	15-min Total	Rolling One Hour
7:00 AM		0	74	0	0	0	0	0	0	0	4	180	0	0	0	30	10	298	0
7:15 AM		0	83	0	3	0	0	0	0	0	3	180	0	0	0	34	7	310	0
7:30 AM		0	60	0	1	0	0	0	0	0	5	223	0	0	0	55	10	354	0
7:45 AM		0	65	0	0	0	0	0	0	0	5	201	0	0	0	43	12	326	1,288
8:00 AM		0	49	0	2	0	0	0	0	0	3	141	0	0	0	42	18	255	1,245
8:15 AM		0	68	0	4	0	0	0	0	0	3	139	0	0	0	49	21	284	1,219
8:30 AM		0	62	0	3	0	0	0	0	0	3	169	0	0	0	38	21	296	1,161
8:45 AM		0	31	0	5	0	0	0	0	0	2	140	0	0	0	44	15	237	1,072
Count Total		0	492	0	18	0	0	0	0	0	28	1,373	0	0	0	335	114	2,360	0
Peak Hour	All	0	282	0	4	0	0	0	0	0	17	784	0	0	0	162	39	1,288	0
	HV	0	4	0	1	0	0	0	0	0	3	21	0	0	0	9	1	39	0
	HV%	-	1%	-	25%	-	-	-	-	-	18%	3%	-	-	-	6%	3%	3%	0

Note: Two-hour count summary volumes include heavy vehicles but exclude bicycles in overall count.

Interval Start	Heavy Vehicle Totals EB	WB	NB	SB	Total	Bicycles EB	WB	NB	SB	Total	Pedestrians (Crossing Leg) East	West	North	South	Total
7:00 AM	0	0	2	3	*5*	0	0	0	0	*0*	0	0	0	0	*0*
7:15 AM	3	0	6	1	*10*	0	0	0	0	*0*	0	0	0	0	*0*
7:30 AM	2	0	5	2	*9*	0	0	0	0	*0*	0	0	0	0	*0*
7:45 AM	0	0	11	4	*15*	0	0	0	0	*0*	0	0	0	0	*0*
8:00 AM	1	0	4	7	*12*	0	0	0	0	*0*	0	0	0	0	*0*
8:15 AM	3	0	3	4	*10*	0	0	0	0	*0*	0	0	0	0	*0*
8:30 AM	5	0	4	4	*13*	0	0	0	0	*0*	0	0	0	0	*0*
8:45 AM	2	0	2	5	*9*	0	0	0	0	*0*	0	0	0	0	*0*
Count Total	16	0	37	30	*83*	0	0	0	0	*0*	0	0	0	0	*0*
Peak Hr	5	0	24	10	*39*	0	0	0	0	*0*	0	0	0	0	*0*

Two-Hour Count Summaries - Heavy Vehicles

Interval Start	Cedar Grover Rd SE				0				Issaquah-Horbart Rd SE				Issaquah-Horbart Rd SE				15-min Total	Rolling One Hour
	Eastbound				Westbound				Northbound				Southbound					
	UT	LT	TH	RT	UT	LT	TH	RT	UT	LT	TH	RT	UT	LT	TH	RT		
7:00 AM	**0**	**0**	**0**	**0**	**0**	**0**	**0**	**0**	**0**	**0**	**2**	**0**	**0**	**0**	**2**	**1**	**5**	0
7:15 AM	**0**	**2**	**0**	**1**	**0**	**0**	**0**	**0**	**0**	**0**	**6**	**0**	**0**	**0**	**1**	**0**	**10**	0
7:30 AM	**0**	**2**	**0**	**0**	**0**	**0**	**0**	**0**	**0**	**0**	**5**	**0**	**0**	**0**	**2**	**0**	**9**	0
7:45 AM	**0**	**0**	**0**	**0**	**0**	**0**	**0**	**0**	**0**	**3**	**8**	**0**	**0**	**0**	**4**	**0**	**15**	**39**
8:00 AM	0	1	0	0	0	0	0	0	0	1	3	0	0	0	3	4	12	46
8:15 AM	0	3	0	0	0	0	0	0	0	1	2	0	0	0	1	3	10	46
8:30 AM	0	3	0	2	0	0	0	0	0	1	3	0	0	0	2	2	13	50
8:45 AM	0	1	0	1	0	0	0	0	0	0	2	0	0	0	4	1	9	44
Count Total	0	12	0	4	0	0	0	0	0	6	31	0	0	0	19	11	83	0
Peak Hour	**0**	**4**	**0**	**1**	**0**	**0**	**0**	**0**	**0**	**3**	**21**	**0**	**0**	**0**	**9**	**1**	**39**	**0**

Two-Hour Count Summaries - Bikes

Interval Start	Cedar Grover Rd SE			0			Issaquah-Horbart Rd SE			Issaquah-Horbart Rd SE			15-min Total	Rolling One Hour
	Eastbound			Westbound			Northbound			Southbound				
	LT	TH	RT	LT	TH	RT	LT	TH	RT	LT	TH	RT		
7:00 AM	**0**	**0**	**0**	**0**	**0**	**0**	**0**	**0**	**0**	**0**	**0**	**0**	**0**	0
7:15 AM	**0**	**0**	**0**	**0**	**0**	**0**	**0**	**0**	**0**	**0**	**0**	**0**	**0**	0
7:30 AM	**0**	**0**	**0**	**0**	**0**	**0**	**0**	**0**	**0**	**0**	**0**	**0**	**0**	0
7:45 AM	**0**	**0**	**0**	**0**	**0**	**0**	**0**	**0**	**0**	**0**	**0**	**0**	**0**	**0**
8:00 AM	0	0	0	0	0	0	0	0	0	0	0	0	0	0
8:15 AM	0	0	0	0	0	0	0	0	0	0	0	0	0	0
8:30 AM	0	0	0	0	0	0	0	0	0	0	0	0	0	0
8:45 AM	0	0	0	0	0	0	0	0	0	0	0	0	0	0
Count Total	0	0	0	0	0	0	0	0	0	0	0	0	0	0
Peak Hour	**0**	**0**	**0**	**0**	**0**	**0**	**0**	**0**	**0**	**0**	**0**	**0**	**0**	**0**

Note: U-Turn volumes for bikes are included in Left-Turn, if any.

Issaquah-Horbart Rd SE
Cedar Grover Rd SE

Date: 02-23-2021
Count Period: 11:00 AM to 1:00 PM
Peak Hour: 11:15 AM to 12:15 PM

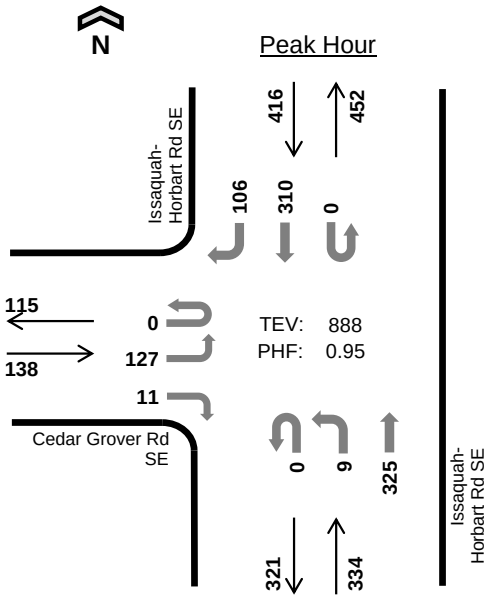

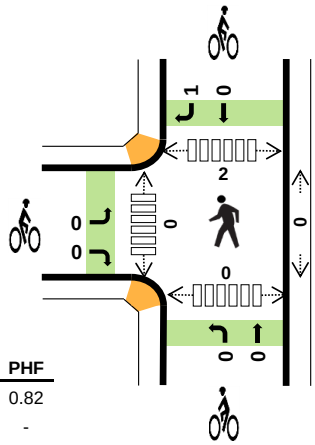

	HV %:	PHF
EB	8.0%	0.82
WB	-	-
NB	4.2%	0.88
SB	6.0%	0.90
TOTAL	5.6%	0.95

Two-Hour Count Summaries

Interval Start		Cedar Grover Rd SE Eastbound UT	LT	TH	RT	0 Westbound UT	LT	TH	RT	Issaquah-Horbart Rd SE Northbound UT	LT	TH	RT	Issaquah-Horbart Rd SE Southbound UT	LT	TH	RT	15-min Total	Rolling One Hour
11:00 AM		0	35	0	2	0	0	0	0	0	4	80	0	0	0	46	16	183	0
11:15 AM		**0**	**37**	**0**	**3**	**0**	**0**	**0**	**0**	**0**	**4**	**78**	**0**	**0**	**0**	**78**	**19**	**219**	0
11:30 AM		**0**	**38**	**0**	**4**	**0**	**0**	**0**	**0**	**0**	**2**	**93**	**0**	**0**	**0**	**73**	**24**	**234**	0
11:45 AM		**0**	**20**	**0**	**1**	**0**	**0**	**0**	**0**	**0**	**1**	**80**	**0**	**0**	**0**	**81**	**35**	**218**	854
12:00 PM		**0**	**32**	**0**	**3**	**0**	**0**	**0**	**0**	**0**	**2**	**74**	**0**	**0**	**0**	**78**	**28**	**217**	**888**
12:15 PM		0	37	0	4	0	0	0	0	0	2	61	0	0	0	73	32	209	878
12:30 PM		0	27	0	3	0	0	0	0	0	1	70	0	0	0	88	34	223	867
12:45 PM		0	23	0	1	0	0	0	0	0	4	73	0	0	0	90	35	226	875
Count Total		0	249	0	21	0	0	0	0	0	20	609	0	0	0	607	223	1,729	0
Peak Hour	**All**	**0**	**127**	**0**	**11**	**0**	**0**	**0**	**0**	**0**	**9**	**325**	**0**	**0**	**0**	**310**	**106**	**888**	**0**
	HV	**0**	**9**	**0**	**2**	**0**	**0**	**0**	**0**	**0**	**1**	**13**	**0**	**0**	**0**	**16**	**9**	**50**	**0**
	HV%	**-**	**7%**	**-**	**18%**	**-**	**-**	**-**	**-**	**-**	**11%**	**4%**	**-**	**-**	**-**	**5%**	**8%**	**6%**	**0**

Note: Two-hour count summary volumes include heavy vehicles but exclude bicycles in overall count.

Interval Start	Heavy Vehicle Totals EB	WB	NB	SB	Total	Bicycles EB	WB	NB	SB	Total	Pedestrians (Crossing Leg) East	West	North	South	Total
11:00 AM	3	0	2	5	*10*	0	0	0	0	*0*	0	0	0	0	*0*
11:15 AM	**3**	**0**	**3**	**8**	***14***	**0**	**0**	**0**	**0**	***0***	**0**	**0**	**1**	**0**	*1*
11:30 AM	**5**	**0**	**2**	**9**	***16***	**0**	**0**	**0**	**1**	***1***	**0**	**0**	**1**	**0**	*1*
11:45 AM	**0**	**0**	**4**	**5**	***9***	**0**	**0**	**0**	**0**	***0***	**0**	**0**	**0**	**0**	*0*
12:00 PM	**3**	**0**	**5**	**3**	***11***	**0**	**0**	**0**	**0**	***0***	**0**	**0**	**0**	**0**	***0***
12:15 PM	3	0	4	3	*10*	0	0	0	0	*0*	0	0	0	0	*0*
12:30 PM	2	0	2	5	*9*	0	0	0	0	*0*	0	0	0	0	*0*
12:45 PM	2	0	8	10	*20*	2	0	0	0	*2*	0	0	0	0	*0*
Count Total	21	0	30	48	*99*	2	0	0	1	*3*	0	0	2	0	*2*
Peak Hr	**11**	**0**	**14**	**25**	***50***	**0**	**0**	**0**	**1**	***1***	**0**	**0**	**2**	**0**	***2***

Two-Hour Count Summaries - Heavy Vehicles

Interval Start	Cedar Grover Rd SE				0				Issaquah-Horbart Rd SE				Issaquah-Horbart Rd SE				15-min Total	Rolling One Hour
	Eastbound				Westbound				Northbound				Southbound					
	UT	LT	TH	RT	UT	LT	TH	RT	UT	LT	TH	RT	UT	LT	TH	RT		
11:00 AM	0	3	0	0	0	0	0	0	0	2	0	0	0	0	2	3	10	0
11:15 AM	**0**	**3**	**0**	**0**	**0**	**0**	**0**	**0**	**0**	**0**	**3**	**0**	**0**	**0**	**6**	**2**	**14**	0
11:30 AM	**0**	**4**	**0**	**1**	**0**	**0**	**0**	**0**	**0**	**1**	**1**	**0**	**0**	**0**	**7**	**2**	**16**	0
11:45 AM	**0**	**0**	**0**	**0**	**0**	**0**	**0**	**0**	**0**	**0**	**4**	**0**	**0**	**0**	**1**	**4**	**9**	49
12:00 PM	**0**	**2**	**0**	**1**	**0**	**0**	**0**	**0**	**0**	**0**	**5**	**0**	**0**	**0**	**2**	**1**	**11**	**50**
12:15 PM	0	2	0	1	0	0	0	0	0	1	3	0	0	0	1	2	10	46
12:30 PM	0	2	0	0	0	0	0	0	0	0	2	0	0	0	3	2	9	39
12:45 PM	0	2	0	0	0	0	0	0	0	0	8	0	0	0	6	4	20	50
Count Total	0	18	0	3	0	0	0	0	0	4	26	0	0	0	28	20	99	0
Peak Hour	**0**	**9**	**0**	**2**	**0**	**0**	**0**	**0**	**0**	**1**	**13**	**0**	**0**	**0**	**16**	**9**	**50**	**0**

Two-Hour Count Summaries - Bikes

Interval Start	Cedar Grover Rd SE			0			Issaquah-Horbart Rd SE			Issaquah-Horbart Rd SE			15-min Total	Rolling One Hour
	Eastbound			Westbound			Northbound			Southbound				
	LT	TH	RT	LT	TH	RT	LT	TH	RT	LT	TH	RT		
11:00 AM	0	0	0	0	0	0	0	0	0	0	0	0	0	0
11:15 AM	**0**	**0**	**0**	**0**	**0**	**0**	**0**	**0**	**0**	**0**	**0**	**0**	**0**	0
11:30 AM	**0**	**0**	**0**	**0**	**0**	**0**	**0**	**0**	**0**	**0**	**0**	**1**	**1**	0
11:45 AM	**0**	**0**	**0**	**0**	**0**	**0**	**0**	**0**	**0**	**0**	**0**	**0**	**0**	1
12:00 PM	**0**	**0**	**0**	**0**	**0**	**0**	**0**	**0**	**0**	**0**	**0**	**0**	**0**	**1**
12:15 PM	0	0	0	0	0	0	0	0	0	0	0	0	0	1
12:30 PM	0	0	0	0	0	0	0	0	0	0	0	0	0	0
12:45 PM	2	0	0	0	0	0	0	0	0	0	0	0	2	2
Count Total	2	0	0	0	0	0	0	0	0	0	0	1	3	0
Peak Hour	**0**	**0**	**0**	**0**	**0**	**0**	**0**	**0**	**0**	**0**	**0**	**1**	**1**	**0**

Note: U-Turn volumes for bikes are included in Left-Turn, if any.

Issaquah-Horbart Rd SE
Cedar Grover Rd SE

Date: 02-23-2021
Count Period: 4:00 PM to 6:00 PM
Peak Hour: 4:00 PM to 5:00 PM

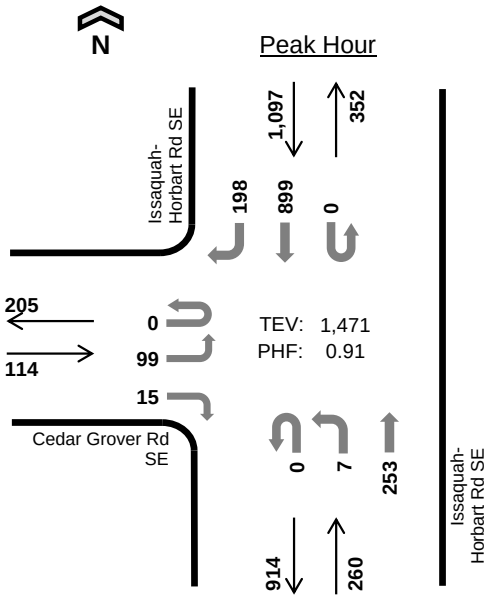

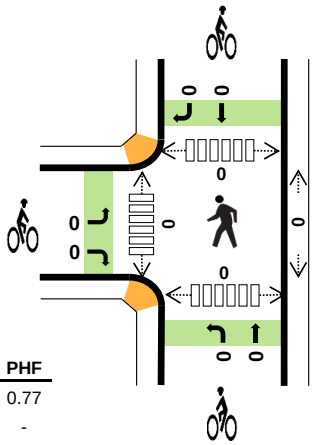

	HV %:	PHF
EB	0.9%	0.77
WB	-	-
NB	0.8%	0.84
SB	1.4%	0.94
TOTAL	1.2%	0.91

Two-Hour Count Summaries

Interval Start		Cedar Grover Rd SE Eastbound UT	LT	TH	RT	0 Westbound UT	LT	TH	RT	Issaquah-Horbart Rd SE Northbound UT	LT	TH	RT	Issaquah-Horbart Rd SE Southbound UT	LT	TH	RT	15-min Total	Rolling One Hour
4:00 PM		**0**	**14**	**0**	**4**	**0**	**0**	**0**	**0**	**0**	**1**	**63**	**0**	**0**	**0**	**239**	**45**	**366**	0
4:15 PM		**0**	**32**	**0**	**5**	**0**	**0**	**0**	**0**	**0**	**0**	**53**	**0**	**0**	**0**	**212**	**51**	**353**	0
4:30 PM		**0**	**31**	**0**	**3**	**0**	**0**	**0**	**0**	**0**	**5**	**72**	**0**	**0**	**0**	**244**	**48**	**403**	0
4:45 PM		**0**	**22**	**0**	**3**	**0**	**0**	**0**	**0**	**0**	**1**	**65**	**0**	**0**	**0**	**204**	**54**	**349**	**1,471**
5:00 PM		0	25	0	4	0	0	0	0	0	1	60	0	0	0	200	54	344	1,449
5:15 PM		0	29	0	1	0	0	0	0	0	2	49	0	0	0	208	51	340	1,436
5:30 PM		0	23	0	6	0	0	0	0	0	3	57	0	0	0	188	54	331	1,364
5:45 PM		0	13	0	3	0	0	0	0	0	3	44	0	0	0	207	57	327	1,342
Count Total		0	189	0	29	0	0	0	0	0	16	463	0	0	0	1,702	414	2,813	0
Peak Hour	**All**	**0**	**99**	**0**	**15**	**0**	**0**	**0**	**0**	**0**	**7**	**253**	**0**	**0**	**0**	**899**	**198**	**1,471**	**0**
	HV	**0**	**0**	**0**	**1**	**0**	**0**	**0**	**0**	**0**	**0**	**2**	**0**	**0**	**0**	**13**	**2**	**18**	**0**
	HV%	**-**	**0%**	**-**	**7%**	**-**	**-**	**-**	**-**	**-**	**0%**	**1%**	**-**	**-**	**-**	**1%**	**1%**	**1%**	**0**

Note: Two-hour count summary volumes include heavy vehicles but exclude bicycles in overall count.

Interval Start	Heavy Vehicle Totals EB	WB	NB	SB	Total	Bicycles EB	WB	NB	SB	Total	Pedestrians (Crossing Leg) East	West	North	South	Total
4:00 PM	**1**	**0**	**0**	**3**	***4***	**0**	**0**	**0**	**0**	***0***	**0**	**0**	**0**	**0**	*0*
4:15 PM	**0**	**0**	**0**	**4**	***4***	**0**	**0**	**0**	**0**	***0***	**0**	**0**	**0**	**0**	*0*
4:30 PM	**0**	**0**	**1**	**4**	***5***	**0**	**0**	**0**	**0**	***0***	**0**	**0**	**0**	**0**	*0*
4:45 PM	**0**	**0**	**1**	**4**	***5***	**0**	**0**	**0**	**0**	***0***	**0**	**0**	**0**	**0**	***0***
5:00 PM	0	0	1	3	*4*	0	0	0	0	*0*	0	0	0	0	*0*
5:15 PM	0	0	1	1	*2*	0	0	0	0	*0*	0	0	0	0	*0*
5:30 PM	1	0	0	0	*1*	0	0	0	0	*0*	0	0	0	0	*0*
5:45 PM	0	0	0	2	*2*	0	0	0	0	*0*	0	0	0	0	*0*
Count Total	2	0	4	21	*27*	0	0	0	0	*0*	0	0	0	0	*0*
Peak Hr	**1**	**0**	**2**	**15**	***18***	**0**	**0**	**0**	**0**	***0***	**0**	**0**	**0**	**0**	***0***

Two-Hour Count Summaries - Heavy Vehicles

Interval Start	Cedar Grover Rd SE				0				Issaquah-Horbart Rd SE				Issaquah-Horbart Rd SE				15-min Total	Rolling One Hour
	Eastbound				Westbound				Northbound				Southbound					
	UT	LT	TH	RT	UT	LT	TH	RT	UT	LT	TH	RT	UT	LT	TH	RT		
4:00 PM	**0**	**0**	**0**	**1**	**0**	**0**	**0**	**0**	**0**	**0**	**0**	**0**	**0**	**0**	**3**	**0**	**4**	0
4:15 PM	**0**	**0**	**0**	**0**	**0**	**0**	**0**	**0**	**0**	**0**	**0**	**0**	**0**	**0**	**3**	**1**	**4**	0
4:30 PM	**0**	**0**	**0**	**0**	**0**	**0**	**0**	**0**	**0**	**0**	**1**	**0**	**0**	**0**	**3**	**1**	**5**	0
4:45 PM	**0**	**0**	**0**	**0**	**0**	**0**	**0**	**0**	**0**	**0**	**1**	**0**	**0**	**0**	**4**	**0**	**5**	**18**
5:00 PM	0	0	0	0	0	0	0	0	0	0	1	0	0	0	1	2	4	18
5:15 PM	0	0	0	0	0	0	0	0	0	0	1	0	0	0	1	0	2	16
5:30 PM	0	1	0	0	0	0	0	0	0	0	0	0	0	0	0	0	1	12
5:45 PM	0	0	0	0	0	0	0	0	0	0	0	0	0	0	2	0	2	9
Count Total	0	1	0	1	0	0	0	0	0	0	4	0	0	0	17	4	27	0
Peak Hour	**0**	**0**	**0**	**1**	**0**	**0**	**0**	**0**	**0**	**0**	**2**	**0**	**0**	**0**	**13**	**2**	**18**	**0**

Two-Hour Count Summaries - Bikes

Interval Start	Cedar Grover Rd SE			0			Issaquah-Horbart Rd SE			Issaquah-Horbart Rd SE			15-min Total	Rolling One Hour
	Eastbound			Westbound			Northbound			Southbound				
	LT	TH	RT	LT	TH	RT	LT	TH	RT	LT	TH	RT		
4:00 PM	**0**	**0**	**0**	**0**	**0**	**0**	**0**	**0**	**0**	**0**	**0**	**0**	**0**	0
4:15 PM	**0**	**0**	**0**	**0**	**0**	**0**	**0**	**0**	**0**	**0**	**0**	**0**	**0**	0
4:30 PM	**0**	**0**	**0**	**0**	**0**	**0**	**0**	**0**	**0**	**0**	**0**	**0**	**0**	0
4:45 PM	**0**	**0**	**0**	**0**	**0**	**0**	**0**	**0**	**0**	**0**	**0**	**0**	**0**	**0**
5:00 PM	0	0	0	0	0	0	0	0	0	0	0	0	0	0
5:15 PM	0	0	0	0	0	0	0	0	0	0	0	0	0	0
5:30 PM	0	0	0	0	0	0	0	0	0	0	0	0	0	0
5:45 PM	0	0	0	0	0	0	0	0	0	0	0	0	0	0
Count Total	0	0	0	0	0	0	0	0	0	0	0	0	0	0
Peak Hour	**0**	**0**	**0**	**0**	**0**	**0**	**0**	**0**	**0**	**0**	**0**	**0**	**0**	**0**

Note: U-Turn volumes for bikes are included in Left-Turn, if any.

Issaquah-Horbart Rd SE
SR 18 WB Ramps

Date: 02-23-2021
Count Period: 7:00 AM to 9:00 AM
Peak Hour: 7:00 AM to 8:00 AM

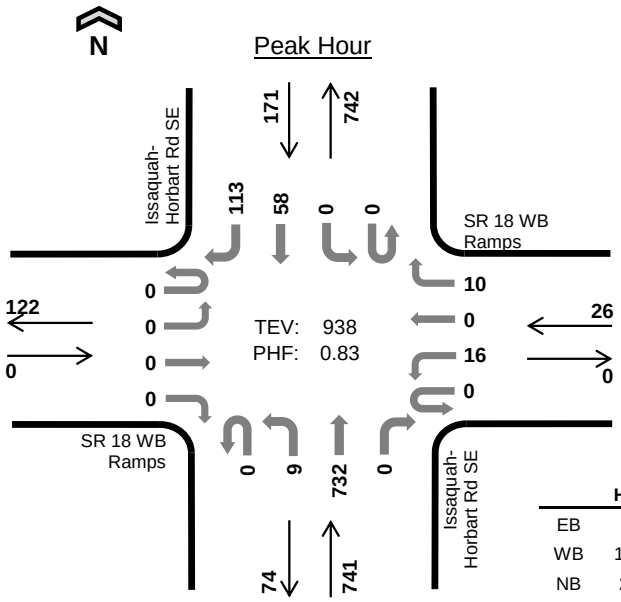

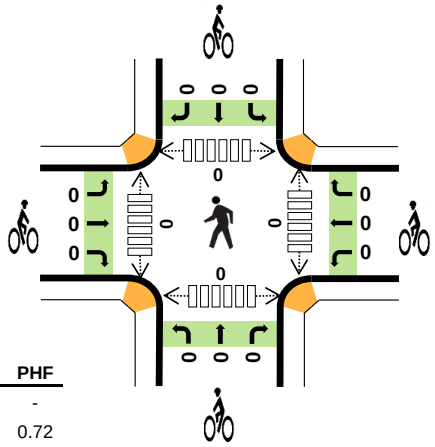

	HV %:	PHF
EB	-	-
WB	19.2%	0.72
NB	2.8%	0.82
SB	4.1%	0.89
TOTAL	3.5%	0.83

Two-Hour Count Summaries

Interval Start		SR 18 WB Ramps Eastbound UT	LT	TH	RT	SR 18 WB Ramps Westbound UT	LT	TH	RT	Issaquah-Horbart Rd SE Northbound UT	LT	TH	RT	Issaquah-Horbart Rd SE Southbound UT	LT	TH	RT	15-min Total	Rolling One Hour
7:00 AM		**0**	**0**	**0**	**0**	**0**	**1**	**0**	**1**	**0**	**2**	**190**	**0**	**0**	**0**	**15**	**19**	**228**	0
7:15 AM		**0**	**0**	**0**	**0**	**0**	**5**	**0**	**2**	**0**	**4**	**161**	**0**	**0**	**0**	**15**	**29**	**216**	0
7:30 AM		**0**	**0**	**0**	**0**	**0**	**6**	**0**	**3**	**0**	**2**	**224**	**0**	**0**	**0**	**18**	**30**	**283**	0
7:45 AM		**0**	**0**	**0**	**0**	**0**	**4**	**0**	**4**	**0**	**1**	**157**	**0**	**0**	**0**	**10**	**35**	**211**	**938**
8:00 AM		0	0	0	0	0	3	0	0	0	5	131	0	0	0	10	41	190	900
8:15 AM		0	0	0	0	0	5	0	6	0	6	139	0	0	0	15	20	191	875
8:30 AM		0	0	0	0	0	4	0	3	0	3	127	0	0	0	12	33	182	774
8:45 AM		0	0	0	0	0	5	0	1	0	1	120	0	0	0	16	27	170	733
Count Total		0	0	0	0	0	33	0	20	0	24	1,249	0	0	0	111	234	1,671	0
Peak Hour	**All**	**0**	**0**	**0**	**0**	**0**	**16**	**0**	**10**	**0**	**9**	**732**	**0**	**0**	**0**	**58**	**113**	**938**	**0**
	HV	**0**	**0**	**0**	**0**	**0**	**1**	**0**	**4**	**0**	**0**	**21**	**0**	**0**	**0**	**4**	**3**	**33**	**0**
	HV%	**-**	**-**	**-**	**-**	**-**	**6%**	**-**	**40%**	**-**	**0%**	**3%**	**-**	**-**	**-**	**7%**	**3%**	**4%**	**0**

Note: Two-hour count summary volumes include heavy vehicles but exclude bicycles in overall count.

Interval Start	Heavy Vehicle Totals EB	WB	NB	SB	Total	Bicycles EB	WB	NB	SB	Total	Pedestrians (Crossing Leg) East	West	North	South	Total
7:00 AM	**0**	**0**	**3**	**3**	***6***	**0**	**0**	**0**	**0**	***0***	**0**	**0**	**0**	**0**	*0*
7:15 AM	**0**	**1**	**6**	**1**	***8***	**0**	**0**	**0**	**0**	***0***	**0**	**0**	**0**	**0**	*0*
7:30 AM	**0**	**1**	**5**	**1**	***7***	**0**	**0**	**0**	**0**	***0***	**0**	**0**	**0**	**0**	*0*
7:45 AM	**0**	**3**	**7**	**2**	***12***	**0**	**0**	**0**	**0**	***0***	**0**	**0**	**0**	**0**	***0***
8:00 AM	0	0	2	3	*5*	0	0	0	0	*0*	0	0	0	0	*0*
8:15 AM	0	1	2	2	*5*	0	0	0	0	*0*	0	0	0	0	*0*
8:30 AM	0	2	1	2	*5*	0	0	0	0	*0*	0	0	0	0	*0*
8:45 AM	0	1	6	5	*12*	0	0	0	0	*0*	0	0	0	0	*0*
Count Total	0	9	32	19	*60*	0	0	0	0	*0*	0	0	0	0	*0*
Peak Hour	**0**	**5**	**21**	**7**	***33***	**0**	**0**	**0**	**0**	***0***	**0**	**0**	**0**	**0**	***0***

Two-Hour Count Summaries - Heavy Vehicles

Interval Start	SR 18 WB Ramps				SR 18 WB Ramps				Issaquah-Horbart Rd SE				Issaquah-Horbart Rd SE				15-min Total	Rolling One Hour
	Eastbound				Westbound				Northbound				Southbound					
	UT	LT	TH	RT	UT	LT	TH	RT	UT	LT	TH	RT	UT	LT	TH	RT		
7:00 AM	**0**	**0**	**0**	**0**	**0**	**0**	**0**	**0**	**0**	**0**	**3**	**0**	**0**	**0**	**2**	**1**	**6**	0
7:15 AM	**0**	**0**	**0**	**0**	**0**	**1**	**0**	**0**	**0**	**0**	**6**	**0**	**0**	**0**	**0**	**1**	**8**	0
7:30 AM	**0**	**0**	**0**	**0**	**0**	**0**	**0**	**1**	**0**	**0**	**5**	**0**	**0**	**0**	**1**	**0**	**7**	0
7:45 AM	**0**	**0**	**0**	**0**	**0**	**0**	**0**	**3**	**0**	**0**	**7**	**0**	**0**	**0**	**1**	**1**	**12**	**33**
8:00 AM	0	0	0	0	0	0	0	0	0	0	2	0	0	0	1	2	5	32
8:15 AM	0	0	0	0	0	0	0	1	0	0	2	0	0	0	0	2	5	29
8:30 AM	0	0	0	0	0	1	0	1	0	0	1	0	0	0	1	1	5	27
8:45 AM	0	0	0	0	0	1	0	0	0	0	6	0	0	0	3	2	12	27
Count Total	0	0	0	0	0	3	0	6	0	0	32	0	0	0	9	10	60	0
Peak Hour	**0**	**0**	**0**	**0**	**0**	**1**	**0**	**4**	**0**	**0**	**21**	**0**	**0**	**0**	**4**	**3**	**33**	**0**

Two-Hour Count Summaries - Bikes

Interval Start	SR 18 WB Ramps			SR 18 WB Ramps			Issaquah-Horbart Rd SE			Issaquah-Horbart Rd SE			15-min Total	Rolling One Hour
	Eastbound			Westbound			Northbound			Southbound				
	LT	TH	RT	LT	TH	RT	LT	TH	RT	LT	TH	RT		
7:00 AM	**0**	**0**	**0**	**0**	**0**	**0**	**0**	**0**	**0**	**0**	**0**	**0**	**0**	0
7:15 AM	**0**	**0**	**0**	**0**	**0**	**0**	**0**	**0**	**0**	**0**	**0**	**0**	**0**	0
7:30 AM	**0**	**0**	**0**	**0**	**0**	**0**	**0**	**0**	**0**	**0**	**0**	**0**	**0**	0
7:45 AM	**0**	**0**	**0**	**0**	**0**	**0**	**0**	**0**	**0**	**0**	**0**	**0**	**0**	**0**
8:00 AM	0	0	0	0	0	0	0	0	0	0	0	0	0	0
8:15 AM	0	0	0	0	0	0	0	0	0	0	0	0	0	0
8:30 AM	0	0	0	0	0	0	0	0	0	0	0	0	0	0
8:45 AM	0	0	0	0	0	0	0	0	0	0	0	0	0	0
Count Total	0	0	0	0	0	0	0	0	0	0	0	0	0	0
Peak Hour	**0**	**0**	**0**	**0**	**0**	**0**	**0**	**0**	**0**	**0**	**0**	**0**	**0**	**0**

Note: U-Turn volumes for bikes are included in Left-Turn, if any.

Issaquah-Horbart Rd SE
SR 18 WB Ramps

Date: 02-23-2021
Count Period: 11:00 AM to 1:00 PM
Peak Hour: 12:00 PM to 1:00 PM

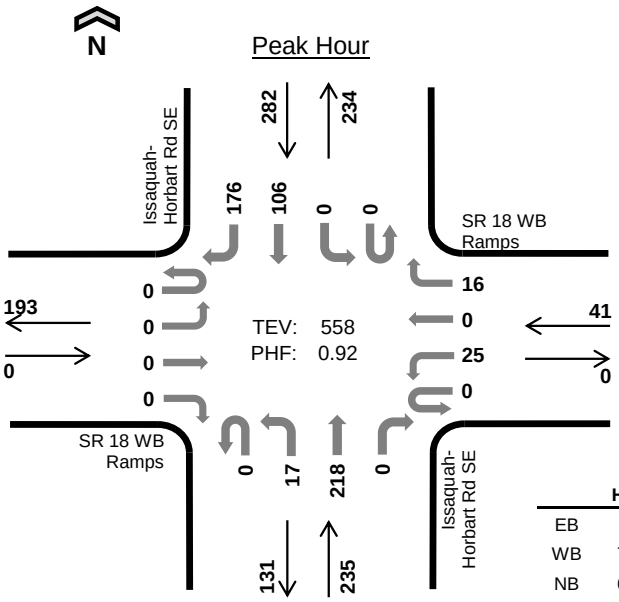

	HV %:	PHF
EB	-	-
WB	7.3%	0.68
NB	6.4%	0.88
SB	3.9%	0.95
TOTAL	5.2%	0.92

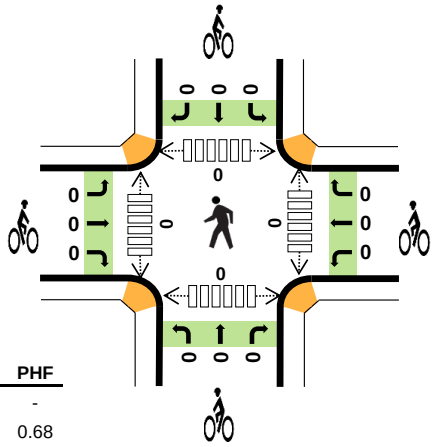

Two-Hour Count Summaries

Interval Start		SR 18 WB Ramps Eastbound UT	LT	TH	RT	SR 18 WB Ramps Westbound UT	LT	TH	RT	Issaquah-Horbart Rd SE Northbound UT	LT	TH	RT	Issaquah-Horbart Rd SE Southbound UT	LT	TH	RT	15-min Total	Rolling One Hour
11:00 AM		0	0	0	0	0	5	0	3	0	5	58	0	0	0	18	34	123	0
11:15 AM		0	0	0	0	0	4	2	1	0	8	65	0	0	0	40	33	153	0
11:30 AM		0	0	0	0	0	10	1	3	0	1	70	0	0	0	21	30	136	0
11:45 AM		0	0	0	0	0	4	0	1	0	2	61	0	0	0	26	40	134	546
12:00 PM		**0**	**0**	**0**	**0**	**0**	**3**	**0**	**2**	**0**	**6**	**49**	**0**	**0**	**0**	**31**	**43**	**134**	557
12:15 PM		**0**	**0**	**0**	**0**	**0**	**5**	**0**	**4**	**0**	**7**	**50**	**0**	**0**	**0**	**26**	**40**	**132**	536
12:30 PM		**0**	**0**	**0**	**0**	**0**	**10**	**0**	**5**	**0**	**1**	**66**	**0**	**0**	**0**	**19**	**50**	**151**	551
12:45 PM		**0**	**0**	**0**	**0**	**0**	**7**	**0**	**5**	**0**	**3**	**53**	**0**	**0**	**0**	**30**	**43**	**141**	**558**
Count Total		0	0	0	0	0	48	3	24	0	33	472	0	0	0	211	313	1,104	0
Peak Hour	**All**	**0**	**0**	**0**	**0**	**0**	**25**	**0**	**16**	**0**	**17**	**218**	**0**	**0**	**0**	**106**	**176**	**558**	**0**
	HV	**0**	**0**	**0**	**0**	**0**	**3**	**0**	**0**	**0**	**2**	**13**	**0**	**0**	**0**	**1**	**10**	**29**	**0**
	HV%	**-**	**-**	**-**	**-**	**-**	**12%**	**-**	**0%**	**-**	**12%**	**6%**	**-**	**-**	**-**	**1%**	**6%**	**5%**	**0**

Note: Two-hour count summary volumes include heavy vehicles but exclude bicycles in overall count.

Interval Start	Heavy Vehicle Totals EB	WB	NB	SB	Total	Bicycles EB	WB	NB	SB	Total	Pedestrians (Crossing Leg) East	West	North	South	Total
11:00 AM	0	0	3	3	*6*	0	0	0	0	*0*	0	0	0	0	*0*
11:15 AM	0	0	2	2	*4*	0	0	0	1	*1*	0	0	0	0	*0*
11:30 AM	0	3	2	9	*14*	0	0	0	0	*0*	0	0	0	0	*0*
11:45 AM	0	1	7	2	*10*	0	0	0	0	*0*	0	0	0	0	*0*
12:00 PM	**0**	**1**	**2**	**1**	***4***	**0**	**0**	**0**	**0**	***0***	**0**	**0**	**0**	**0**	*0*
12:15 PM	**0**	**0**	**3**	**2**	***5***	**0**	**0**	**0**	**0**	***0***	**0**	**0**	**0**	**0**	*0*
12:30 PM	**0**	**2**	**3**	**5**	***10***	**0**	**0**	**0**	**0**	***0***	**0**	**0**	**0**	**0**	*0*
12:45 PM	**0**	**0**	**7**	**3**	***10***	**0**	**0**	**0**	**0**	***0***	**0**	**0**	**0**	**0**	***0***
Count Total	0	7	29	27	*63*	0	0	0	1	*1*	0	0	0	0	*0*
Peak Hour	**0**	**3**	**15**	**11**	***29***	**0**	**0**	**0**	**0**	***0***	**0**	**0**	**0**	**0**	***0***

Two-Hour Count Summaries - Heavy Vehicles

Interval Start	SR 18 WB Ramps				SR 18 WB Ramps				Issaquah-Horbart Rd SE				Issaquah-Horbart Rd SE				15-min Total	Rolling One Hour
	Eastbound				Westbound				Northbound				Southbound					
	UT	LT	TH	RT	UT	LT	TH	RT	UT	LT	TH	RT	UT	LT	TH	RT		
11:00 AM	0	0	0	0	0	0	0	0	0	0	3	0	0	0	2	1	6	0
11:15 AM	0	0	0	0	0	0	0	0	0	1	1	0	0	0	2	0	4	0
11:30 AM	0	0	0	0	0	2	0	1	0	0	2	0	0	0	6	3	14	0
11:45 AM	0	0	0	0	0	1	0	0	0	0	7	0	0	0	1	1	10	34
12:00 PM	**0**	**0**	**0**	**0**	**0**	**1**	**0**	**0**	**0**	**0**	**2**	**0**	**0**	**0**	**0**	**1**	**4**	32
12:15 PM	**0**	**0**	**0**	**0**	**0**	**0**	**0**	**0**	**0**	**1**	**2**	**0**	**0**	**0**	**0**	**2**	**5**	33
12:30 PM	**0**	**0**	**0**	**0**	**0**	**2**	**0**	**0**	**0**	**0**	**3**	**0**	**0**	**0**	**0**	**5**	**10**	29
12:45 PM	**0**	**0**	**0**	**0**	**0**	**0**	**0**	**0**	**0**	**1**	**6**	**0**	**0**	**0**	**1**	**2**	**10**	**29**
Count Total	0	0	0	0	0	6	0	1	0	3	26	0	0	0	12	15	63	0
Peak Hour	**0**	**0**	**0**	**0**	**0**	**3**	**0**	**0**	**0**	**2**	**13**	**0**	**0**	**0**	**1**	**10**	**29**	**0**

Two-Hour Count Summaries - Bikes

Interval Start	SR 18 WB Ramps			SR 18 WB Ramps			Issaquah-Horbart Rd SE			Issaquah-Horbart Rd SE			15-min Total	Rolling One Hour
	Eastbound			Westbound			Northbound			Southbound				
	LT	TH	RT	LT	TH	RT	LT	TH	RT	LT	TH	RT		
11:00 AM	0	0	0	0	0	0	0	0	0	0	0	0	0	0
11:15 AM	0	0	0	0	0	0	0	0	0	0	1	0	1	0
11:30 AM	0	0	0	0	0	0	0	0	0	0	0	0	0	0
11:45 AM	0	0	0	0	0	0	0	0	0	0	0	0	0	1
12:00 PM	**0**	**0**	**0**	**0**	**0**	**0**	**0**	**0**	**0**	**0**	**0**	**0**	**0**	1
12:15 PM	**0**	**0**	**0**	**0**	**0**	**0**	**0**	**0**	**0**	**0**	**0**	**0**	**0**	0
12:30 PM	**0**	**0**	**0**	**0**	**0**	**0**	**0**	**0**	**0**	**0**	**0**	**0**	**0**	0
12:45 PM	**0**	**0**	**0**	**0**	**0**	**0**	**0**	**0**	**0**	**0**	**0**	**0**	**0**	**0**
Count Total	0	0	0	0	0	0	0	0	0	0	1	0	1	0
Peak Hour	**0**	**0**	**0**	**0**	**0**	**0**	**0**	**0**	**0**	**0**	**0**	**0**	**0**	**0**

Note: U-Turn volumes for bikes are included in Left-Turn, if any.

Issaquah-Horbart Rd SE
SR 18 WB Ramps

Date: 02-23-2021
Count Period: 4:00 PM to 6:00 PM
Peak Hour: 4:00 PM to 5:00 PM

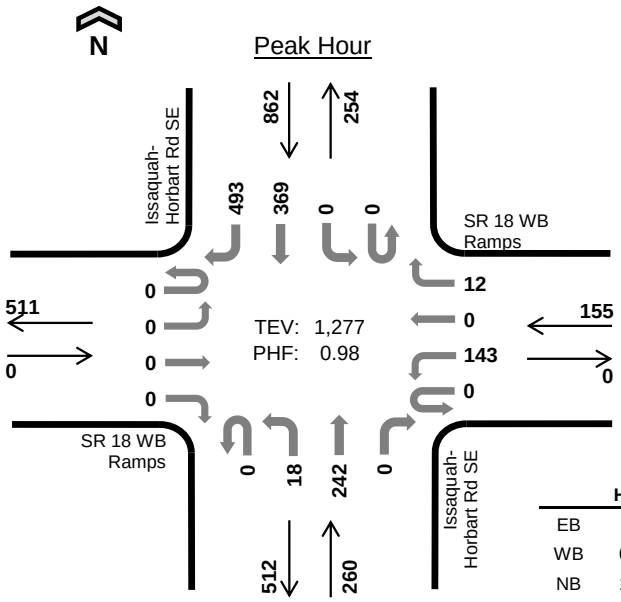

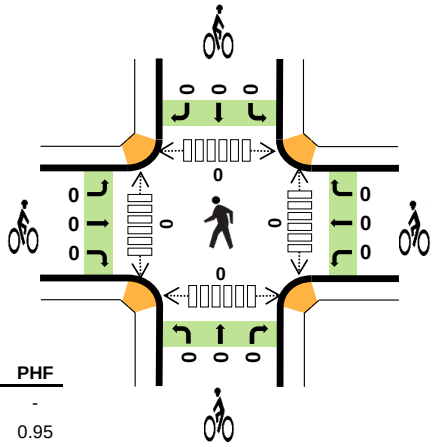

	HV %:	PHF
EB	-	-
WB	0.6%	0.95
NB	1.2%	0.88
SB	1.3%	0.92
TOTAL	1.2%	0.98

Two-Hour Count Summaries

Interval Start		SR 18 WB Ramps Eastbound UT	LT	TH	RT	SR 18 WB Ramps Westbound UT	LT	TH	RT	Issaquah-Horbart Rd SE Northbound UT	LT	TH	RT	Issaquah-Horbart Rd SE Southbound UT	LT	TH	RT	15-min Total	Rolling One Hour
4:00 PM		**0**	**0**	**0**	**0**	**0**	**38**	**0**	**1**	**0**	**5**	**63**	**0**	**0**	**0**	**91**	**120**	**318**	0
4:15 PM		**0**	**0**	**0**	**0**	**0**	**38**	**0**	**2**	**0**	**2**	**64**	**0**	**0**	**0**	**90**	**128**	**324**	0
4:30 PM		**0**	**0**	**0**	**0**	**0**	**35**	**0**	**6**	**0**	**5**	**47**	**0**	**0**	**0**	**103**	**130**	**326**	0
4:45 PM		**0**	**0**	**0**	**0**	**0**	**32**	**0**	**3**	**0**	**6**	**68**	**0**	**0**	**0**	**85**	**115**	**309**	**1,277**
5:00 PM		0	0	0	0	0	36	0	3	0	3	40	0	0	0	64	125	271	1,230
5:15 PM		0	0	0	0	0	19	0	2	0	1	56	0	0	0	73	119	270	1,176
5:30 PM		0	0	0	0	0	23	0	5	0	4	44	0	0	0	69	117	262	1,112
5:45 PM		0	0	0	0	0	16	0	3	0	5	40	0	0	0	46	116	226	1,029
Count Total		0	0	0	0	0	237	0	25	0	31	422	0	0	0	621	970	2,306	0
Peak Hour	**All**	**0**	**0**	**0**	**0**	**0**	**143**	**0**	**12**	**0**	**18**	**242**	**0**	**0**	**0**	**369**	**493**	**1,277**	**0**
	HV	**0**	**0**	**0**	**0**	**0**	**1**	**0**	**0**	**0**	**1**	**2**	**0**	**0**	**0**	**1**	**10**	**15**	**0**
	HV%	**-**	**-**	**-**	**-**	**-**	**1%**	**-**	**0%**	**-**	**6%**	**1%**	**-**	**-**	**-**	**0%**	**2%**	**1%**	**0**

Note: Two-hour count summary volumes include heavy vehicles but exclude bicycles in overall count.

Interval Start	Heavy Vehicle Totals EB	WB	NB	SB	Total	Bicycles EB	WB	NB	SB	Total	Pedestrians (Crossing Leg) East	West	North	South	Total
4:00 PM	**0**	**1**	**0**	**0**	***1***	**0**	**0**	**0**	**0**	***0***	**0**	**0**	**0**	**0**	*0*
4:15 PM	**0**	**0**	**0**	**4**	***4***	**0**	**0**	**0**	**0**	***0***	**0**	**0**	**0**	**0**	*0*
4:30 PM	**0**	**0**	**0**	**3**	***3***	**0**	**0**	**0**	**0**	***0***	**0**	**0**	**0**	**0**	*0*
4:45 PM	**0**	**0**	**3**	**4**	***7***	**0**	**0**	**0**	**0**	***0***	**0**	**0**	**0**	**0**	***0***
5:00 PM	0	2	0	1	*3*	0	0	0	0	*0*	0	0	0	0	*0*
5:15 PM	0	1	0	1	*2*	0	0	0	0	*0*	0	0	0	0	*0*
5:30 PM	0	0	0	0	*0*	0	0	0	0	*0*	0	0	0	0	*0*
5:45 PM	0	2	0	2	*4*	0	0	0	0	*0*	0	0	0	0	*0*
Count Total	0	6	3	15	*24*	0	0	0	0	*0*	0	0	0	0	*0*
Peak Hour	**0**	**1**	**3**	**11**	***15***	**0**	**0**	**0**	**0**	***0***	**0**	**0**	**0**	**0**	***0***

Two-Hour Count Summaries - Heavy Vehicles

Interval Start	SR 18 WB Ramps				SR 18 WB Ramps				Issaquah-Horbart Rd SE				Issaquah-Horbart Rd SE				15-min Total	Rolling One Hour
	Eastbound				Westbound				Northbound				Southbound					
	UT	LT	TH	RT	UT	LT	TH	RT	UT	LT	TH	RT	UT	LT	TH	RT		
4:00 PM	**0**	**0**	**0**	**0**	**0**	**1**	**0**	**0**	**0**	**0**	**0**	**0**	**0**	**0**	**0**	**0**	**1**	0
4:15 PM	**0**	**0**	**0**	**0**	**0**	**0**	**0**	**0**	**0**	**0**	**0**	**0**	**0**	**0**	**0**	**4**	**4**	0
4:30 PM	**0**	**0**	**0**	**0**	**0**	**0**	**0**	**0**	**0**	**0**	**0**	**0**	**0**	**0**	**1**	**2**	**3**	0
4:45 PM	**0**	**0**	**0**	**0**	**0**	**0**	**0**	**0**	**0**	**1**	**2**	**0**	**0**	**0**	**0**	**4**	**7**	**15**
5:00 PM	0	0	0	0	0	2	0	0	0	0	0	0	0	0	0	1	3	17
5:15 PM	0	0	0	0	0	1	0	0	0	0	0	0	0	0	0	1	2	15
5:30 PM	0	0	0	0	0	0	0	0	0	0	0	0	0	0	0	0	0	12
5:45 PM	0	0	0	0	0	2	0	0	0	0	0	0	0	0	0	2	4	9
Count Total	0	0	0	0	0	6	0	0	0	1	2	0	0	0	1	14	24	0
Peak Hour	**0**	**0**	**0**	**0**	**0**	**1**	**0**	**0**	**0**	**1**	**2**	**0**	**0**	**0**	**1**	**10**	**15**	**0**

Two-Hour Count Summaries - Bikes

Interval Start	SR 18 WB Ramps			SR 18 WB Ramps			Issaquah-Horbart Rd SE			Issaquah-Horbart Rd SE			15-min Total	Rolling One Hour
	Eastbound			Westbound			Northbound			Southbound				
	LT	TH	RT	LT	TH	RT	LT	TH	RT	LT	TH	RT		
4:00 PM	**0**	**0**	**0**	**0**	**0**	**0**	**0**	**0**	**0**	**0**	**0**	**0**	**0**	0
4:15 PM	**0**	**0**	**0**	**0**	**0**	**0**	**0**	**0**	**0**	**0**	**0**	**0**	**0**	0
4:30 PM	**0**	**0**	**0**	**0**	**0**	**0**	**0**	**0**	**0**	**0**	**0**	**0**	**0**	0
4:45 PM	**0**	**0**	**0**	**0**	**0**	**0**	**0**	**0**	**0**	**0**	**0**	**0**	**0**	**0**
5:00 PM	0	0	0	0	0	0	0	0	0	0	0	0	0	0
5:15 PM	0	0	0	0	0	0	0	0	0	0	0	0	0	0
5:30 PM	0	0	0	0	0	0	0	0	0	0	0	0	0	0
5:45 PM	0	0	0	0	0	0	0	0	0	0	0	0	0	0
Count Total	0	0	0	0	0	0	0	0	0	0	0	0	0	0
Peak Hour	**0**	**0**	**0**	**0**	**0**	**0**	**0**	**0**	**0**	**0**	**0**	**0**	**0**	**0**

Note: U-Turn volumes for bikes are included in Left-Turn, if any.

Issaquah-Horbart Rd SE
SR 18 EB Ramps

Date: 02-23-2021
Count Period: 7:00 AM to 9:00 AM
Peak Hour: 7:00 AM to 8:00 AM

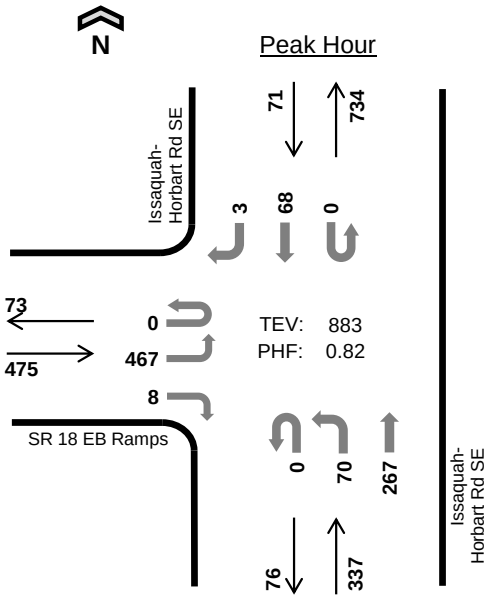

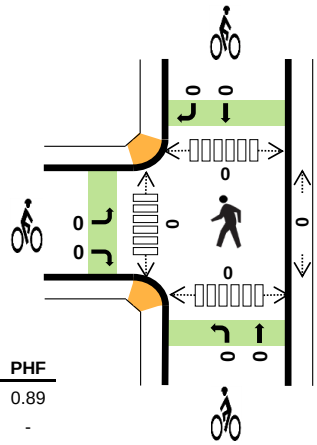

	HV %:	PHF
EB	3.2%	0.89
WB	-	-
NB	2.4%	0.72
SB	5.6%	0.89
TOTAL	3.1%	0.82

Two-Hour Count Summaries

Interval Start	SR 18 EB Ramps				0				Issaquah-Horbart Rd SE				Issaquah-Horbart Rd SE				15-min Total	Rolling One Hour
	Eastbound				Westbound				Northbound				Southbound					
	UT	LT	TH	RT	UT	LT	TH	RT	UT	LT	TH	RT	UT	LT	TH	RT		
7:00 AM	**0**	**115**	**0**	**0**	**0**	**0**	**0**	**0**	**0**	**21**	**71**	**0**	**0**	**0**	**16**	**1**	**224**	0
7:15 AM	**0**	**115**	**0**	**1**	**0**	**0**	**0**	**0**	**0**	**11**	**55**	**0**	**0**	**0**	**19**	**1**	**202**	0
7:30 AM	**0**	**131**	**0**	**2**	**0**	**0**	**0**	**0**	**0**	**23**	**94**	**0**	**0**	**0**	**18**	**0**	**268**	0
7:45 AM	**0**	**106**	**0**	**5**	**0**	**0**	**0**	**0**	**0**	**15**	**47**	**0**	**0**	**0**	**15**	**1**	**189**	**883**
8:00 AM	2	78	0	6	0	0	0	0	0	14	57	0	0	0	15	1	173	832
8:15 AM	0	118	0	5	0	0	0	0	0	14	33	0	0	0	13	3	186	816
8:30 AM	0	83	0	3	0	0	0	0	0	10	43	0	0	0	15	2	156	704
8:45 AM	0	91	0	0	0	0	0	0	0	6	25	0	0	0	24	0	146	661
Count Total	2	837	0	22	0	0	0	0	0	114	425	0	0	0	135	9	1,544	0
Peak Hour All	**0**	**467**	**0**	**8**	**0**	**0**	**0**	**0**	**0**	**70**	**267**	**0**	**0**	**0**	**68**	**3**	**883**	**0**
Peak Hour HV	**0**	**14**	**0**	**1**	**0**	**0**	**0**	**0**	**0**	**1**	**7**	**0**	**0**	**0**	**4**	**0**	**27**	**0**
Peak Hour HV%	**-**	**3%**	**-**	**13%**	**-**	**-**	**-**	**-**	**-**	**1%**	**3%**	**-**	**-**	**-**	**6%**	**0%**	**3%**	**0**

Note: Two-hour count summary volumes include heavy vehicles but exclude bicycles in overall count.

Interval Start	Heavy Vehicle Totals					Bicycles					Pedestrians (Crossing Leg)				
	EB	WB	NB	SB	Total	EB	WB	NB	SB	Total	East	West	North	South	Total
7:00 AM	**2**	**0**	**1**	**2**	***5***	**0**	**0**	**0**	**0**	***0***	**0**	**0**	**0**	**0**	*0*
7:15 AM	**7**	**0**	**1**	**1**	***9***	**0**	**0**	**0**	**0**	***0***	**0**	**0**	**0**	**0**	*0*
7:30 AM	**2**	**0**	**3**	**1**	***6***	**0**	**0**	**0**	**0**	***0***	**0**	**0**	**0**	**0**	*0*
7:45 AM	**4**	**0**	**3**	**0**	***7***	**0**	**0**	**0**	**0**	***0***	**0**	**0**	**0**	**0**	***0***
8:00 AM	1	0	2	2	*5*	0	0	0	0	*0*	0	0	0	0	*0*
8:15 AM	2	0	0	0	*2*	0	0	0	0	*0*	0	0	0	0	*0*
8:30 AM	1	0	0	1	*2*	0	0	0	0	*0*	0	0	0	0	*0*
8:45 AM	5	0	1	5	*11*	0	0	0	0	*0*	0	0	0	0	*0*
Count Total	24	0	11	12	*47*	0	0	0	0	*0*	0	0	0	0	*0*
Peak Hr	**15**	**0**	**8**	**4**	***27***	**0**	**0**	**0**	**0**	***0***	**0**	**0**	**0**	**0**	***0***

Two-Hour Count Summaries - Heavy Vehicles

Interval Start	SR 18 EB Ramps				0				Issaquah-Horbart Rd SE				Issaquah-Horbart Rd SE				15-min Total	Rolling One Hour
	Eastbound				Westbound				Northbound				Southbound					
	UT	LT	TH	RT	UT	LT	TH	RT	UT	LT	TH	RT	UT	LT	TH	RT		
7:00 AM	**0**	**2**	**0**	**0**	**0**	**0**	**0**	**0**	**0**	**0**	**1**	**0**	**0**	**0**	**2**	**0**	**5**	0
7:15 AM	**0**	**6**	**0**	**1**	**0**	**0**	**0**	**0**	**0**	**0**	**1**	**0**	**0**	**0**	**1**	**0**	**9**	0
7:30 AM	**0**	**2**	**0**	**0**	**0**	**0**	**0**	**0**	**0**	**0**	**3**	**0**	**0**	**0**	**1**	**0**	**6**	0
7:45 AM	**0**	**4**	**0**	**0**	**0**	**0**	**0**	**0**	**0**	**1**	**2**	**0**	**0**	**0**	**0**	**0**	**7**	**27**
8:00 AM	0	1	0	0	0	0	0	0	0	1	1	0	0	0	2	0	5	27
8:15 AM	0	2	0	0	0	0	0	0	0	0	0	0	0	0	0	0	2	20
8:30 AM	0	1	0	0	0	0	0	0	0	0	0	0	0	0	0	1	2	16
8:45 AM	0	5	0	0	0	0	0	0	0	0	1	0	0	0	5	0	11	20
Count Total	0	23	0	1	0	0	0	0	0	2	9	0	0	0	11	1	47	0
Peak Hour	**0**	**14**	**0**	**1**	**0**	**0**	**0**	**0**	**0**	**1**	**7**	**0**	**0**	**0**	**4**	**0**	**27**	**0**

Two-Hour Count Summaries - Bikes

Interval Start	SR 18 EB Ramps			0			Issaquah-Horbart Rd SE			Issaquah-Horbart Rd SE			15-min Total	Rolling One Hour
	Eastbound			Westbound			Northbound			Southbound				
	LT	TH	RT	LT	TH	RT	LT	TH	RT	LT	TH	RT		
7:00 AM	**0**	**0**	**0**	**0**	**0**	**0**	**0**	**0**	**0**	**0**	**0**	**0**	**0**	0
7:15 AM	**0**	**0**	**0**	**0**	**0**	**0**	**0**	**0**	**0**	**0**	**0**	**0**	**0**	0
7:30 AM	**0**	**0**	**0**	**0**	**0**	**0**	**0**	**0**	**0**	**0**	**0**	**0**	**0**	0
7:45 AM	**0**	**0**	**0**	**0**	**0**	**0**	**0**	**0**	**0**	**0**	**0**	**0**	**0**	**0**
8:00 AM	0	0	0	0	0	0	0	0	0	0	0	0	0	0
8:15 AM	0	0	0	0	0	0	0	0	0	0	0	0	0	0
8:30 AM	0	0	0	0	0	0	0	0	0	0	0	0	0	0
8:45 AM	0	0	0	0	0	0	0	0	0	0	0	0	0	0
Count Total	0	0	0	0	0	0	0	0	0	0	0	0	0	0
Peak Hour	**0**	**0**	**0**	**0**	**0**	**0**	**0**	**0**	**0**	**0**	**0**	**0**	**0**	**0**

Note: U-Turn volumes for bikes are included in Left-Turn, if any.

Issaquah-Horbart Rd SE
SR 18 EB Ramps

Date: 02-23-2021
Count Period: 11:00 AM to 1:00 PM
Peak Hour: 11:15 AM to 12:15 PM

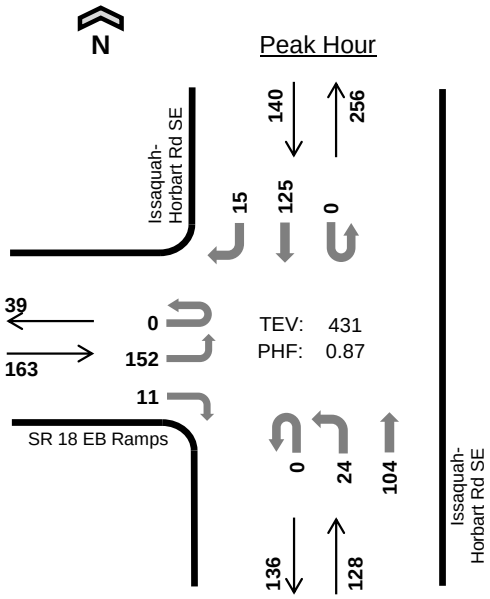

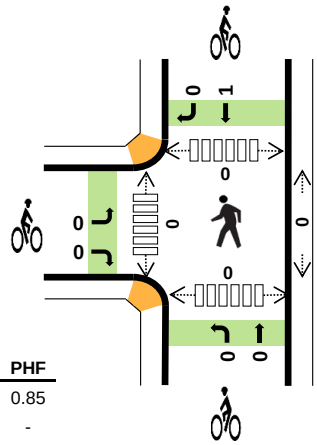

	HV %:	PHF
EB	4.3%	0.85
WB	-	-
NB	6.3%	0.89
SB	10.0%	0.80
TOTAL	6.7%	0.87

Two-Hour Count Summaries

Interval Start		SR 18 EB Ramps				0				Issaquah-Horbart Rd SE				Issaquah-Horbart Rd SE				15-min Total	Rolling One Hour
		Eastbound				Westbound				Northbound				Southbound					
		UT	LT	TH	RT	UT	LT	TH	RT	UT	LT	TH	RT	UT	LT	TH	RT		
11:00 AM		0	39	0	1	0	0	0	0	0	1	26	0	0	0	21	2	90	0
11:15 AM		**0**	**47**	**0**	**1**	**0**	**0**	**0**	**0**	**0**	**5**	**27**	**0**	**0**	**0**	**39**	**5**	**124**	0
11:30 AM		**0**	**36**	**0**	**4**	**0**	**0**	**0**	**0**	**0**	**7**	**29**	**0**	**0**	**0**	**28**	**4**	**108**	0
11:45 AM		**0**	**38**	**0**	**0**	**0**	**0**	**0**	**0**	**0**	**6**	**23**	**0**	**0**	**0**	**26**	**1**	**94**	416
12:00 PM		**0**	**31**	**0**	**6**	**0**	**0**	**0**	**0**	**0**	**6**	**25**	**0**	**0**	**0**	**32**	**5**	**105**	**431**
12:15 PM		0	27	0	3	0	0	0	0	0	9	32	0	0	0	28	3	102	409
12:30 PM		0	41	0	2	0	0	0	0	0	4	28	0	0	0	29	0	104	405
12:45 PM		0	31	0	3	0	0	0	0	0	2	22	0	0	0	36	0	94	405
Count Total		0	290	0	20	0	0	0	0	0	40	212	0	0	0	239	20	821	0
Peak Hour	**All**	**0**	**152**	**0**	**11**	**0**	**0**	**0**	**0**	**0**	**24**	**104**	**0**	**0**	**0**	**125**	**15**	**431**	**0**
	HV	**0**	**5**	**0**	**2**	**0**	**0**	**0**	**0**	**0**	**0**	**8**	**0**	**0**	**0**	**12**	**2**	**29**	**0**
	HV%	**-**	**3%**	**-**	**18%**	**-**	**-**	**-**	**-**	**-**	**0%**	**8%**	**-**	**-**	**-**	**10%**	**13%**	**7%**	**0**

Note: Two-hour count summary volumes include heavy vehicles but exclude bicycles in overall count.

Interval Start	Heavy Vehicle Totals					Bicycles					Pedestrians (Crossing Leg)				
	EB	WB	NB	SB	Total	EB	WB	NB	SB	Total	East	West	North	South	Total
11:00 AM	1	0	2	1	*4*	0	0	0	0	*0*	0	0	0	0	*0*
11:15 AM	**2**	**0**	**1**	**3**	***6***	**0**	**0**	**0**	**0**	***0***	**0**	**0**	**0**	**0**	*0*
11:30 AM	**1**	**0**	**2**	**8**	***11***	**0**	**0**	**0**	**1**	***1***	**0**	**0**	**0**	**0**	*0*
11:45 AM	**3**	**0**	**4**	**2**	***9***	**0**	**0**	**0**	**0**	***0***	**0**	**0**	**0**	**0**	*0*
12:00 PM	**1**	**0**	**1**	**1**	***3***	**0**	**0**	**0**	**0**	***0***	**0**	**0**	**0**	**0**	***0***
12:15 PM	3	0	0	0	*3*	0	0	0	0	*0*	0	0	0	0	*0*
12:30 PM	2	0	3	2	*7*	0	0	1	0	*1*	0	0	0	0	*0*
12:45 PM	1	0	4	1	*6*	0	0	0	0	*0*	0	0	0	0	*0*
Count Total	14	0	17	18	*49*	0	0	1	1	*2*	0	0	0	0	*0*
Peak Hr	**7**	**0**	**8**	**14**	***29***	**0**	**0**	**0**	**1**	***1***	**0**	**0**	**0**	**0**	***0***

Two-Hour Count Summaries - Heavy Vehicles

Interval Start	SR 18 EB Ramps				0				Issaquah-Horbart Rd SE				Issaquah-Horbart Rd SE				15-min Total	Rolling One Hour
	Eastbound				Westbound				Northbound				Southbound					
	UT	LT	TH	RT	UT	LT	TH	RT	UT	LT	TH	RT	UT	LT	TH	RT		
11:00 AM	0	1	0	0	0	0	0	0	0	0	2	0	0	0	0	1	4	0
11:15 AM	**0**	**1**	**0**	**1**	**0**	**0**	**0**	**0**	**0**	**0**	**1**	**0**	**0**	**0**	**3**	**0**	**6**	0
11:30 AM	**0**	**0**	**0**	**1**	**0**	**0**	**0**	**0**	**0**	**0**	**2**	**0**	**0**	**0**	**6**	**2**	**11**	0
11:45 AM	**0**	**3**	**0**	**0**	**0**	**0**	**0**	**0**	**0**	**0**	**4**	**0**	**0**	**0**	**2**	**0**	**9**	30
12:00 PM	**0**	**1**	**0**	**0**	**0**	**0**	**0**	**0**	**0**	**0**	**1**	**0**	**0**	**0**	**1**	**0**	**3**	**29**
12:15 PM	0	3	0	0	0	0	0	0	0	0	0	0	0	0	0	0	3	26
12:30 PM	0	2	0	0	0	0	0	0	0	0	3	0	0	0	2	0	7	22
12:45 PM	0	1	0	0	0	0	0	0	0	0	4	0	0	0	1	0	6	19
Count Total	0	12	0	2	0	0	0	0	0	0	17	0	0	0	15	3	49	0
Peak Hour	**0**	**5**	**0**	**2**	**0**	**0**	**0**	**0**	**0**	**0**	**8**	**0**	**0**	**0**	**12**	**2**	**29**	**0**

Two-Hour Count Summaries - Bikes

Interval Start	SR 18 EB Ramps			0			Issaquah-Horbart Rd SE			Issaquah-Horbart Rd SE			15-min Total	Rolling One Hour
	Eastbound			Westbound			Northbound			Southbound				
	LT	TH	RT	LT	TH	RT	LT	TH	RT	LT	TH	RT		
11:00 AM	0	0	0	0	0	0	0	0	0	0	0	0	0	0
11:15 AM	**0**	**0**	**0**	**0**	**0**	**0**	**0**	**0**	**0**	**0**	**0**	**0**	**0**	0
11:30 AM	**0**	**0**	**0**	**0**	**0**	**0**	**0**	**0**	**0**	**0**	**1**	**0**	**1**	0
11:45 AM	**0**	**0**	**0**	**0**	**0**	**0**	**0**	**0**	**0**	**0**	**0**	**0**	**0**	1
12:00 PM	**0**	**0**	**0**	**0**	**0**	**0**	**0**	**0**	**0**	**0**	**0**	**0**	**0**	**1**
12:15 PM	0	0	0	0	0	0	0	0	0	0	0	0	0	1
12:30 PM	0	0	0	0	0	0	0	1	0	0	0	0	1	1
12:45 PM	0	0	0	0	0	0	0	0	0	0	0	0	0	1
Count Total	0	0	0	0	0	0	0	1	0	0	1	0	2	0
Peak Hour	**0**	**0**	**0**	**0**	**0**	**0**	**0**	**0**	**0**	**0**	**1**	**0**	**1**	**0**

Note: U-Turn volumes for bikes are included in Left-Turn, if any.

Issaquah-Horbart Rd SE
SR 18 EB Ramps

Date: 02-23-2021
Count Period: 4:00 PM to 6:00 PM
Peak Hour: 4:00 PM to 5:00 PM

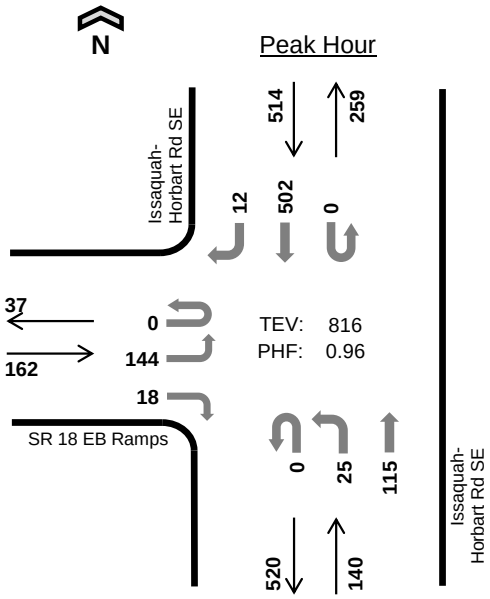

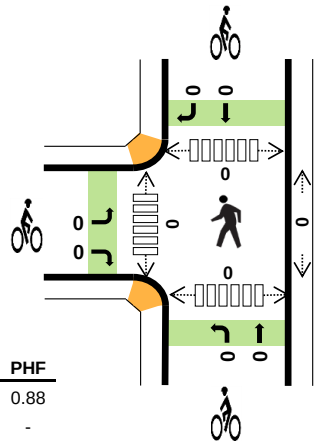

	HV %:	PHF
EB	0.6%	0.88
WB	-	-
NB	1.4%	0.95
SB	0.4%	0.92
TOTAL	0.6%	0.96

Two-Hour Count Summaries

Interval Start		SR 18 EB Ramps				0				Issaquah-Horbart Rd SE				Issaquah-Horbart Rd SE				15-min Total	Rolling One Hour
		Eastbound				Westbound				Northbound				Southbound					
		UT	LT	TH	RT	UT	LT	TH	RT	UT	LT	TH	RT	UT	LT	TH	RT		
4:00 PM		**0**	**39**	**0**	**3**	**0**	**0**	**0**	**0**	**0**	**6**	**29**	**0**	**0**	**0**	**125**	**4**	**206**	0
4:15 PM		**0**	**42**	**0**	**4**	**0**	**0**	**0**	**0**	**0**	**8**	**29**	**0**	**0**	**0**	**127**	**2**	**212**	0
4:30 PM		**0**	**25**	**0**	**5**	**0**	**0**	**0**	**0**	**0**	**6**	**26**	**0**	**0**	**0**	**135**	**4**	**201**	0
4:45 PM		**0**	**38**	**0**	**6**	**0**	**0**	**0**	**0**	**0**	**5**	**31**	**0**	**0**	**0**	**115**	**2**	**197**	**816**
5:00 PM		0	29	0	5	0	0	0	0	0	1	15	0	1	0	100	3	154	764
5:15 PM		0	39	0	4	0	0	0	0	0	5	19	0	0	0	84	5	156	708
5:30 PM		1	32	0	4	0	0	0	0	0	4	18	0	0	0	93	2	154	661
5:45 PM		0	24	0	3	0	0	0	0	0	5	17	0	0	0	62	0	111	575
Count Total		1	268	0	34	0	0	0	0	0	40	184	0	1	0	841	22	1,391	0
Peak Hour	**All**	**0**	**144**	**0**	**18**	**0**	**0**	**0**	**0**	**0**	**25**	**115**	**0**	**0**	**0**	**502**	**12**	**816**	**0**
	HV	**0**	**0**	**0**	**1**	**0**	**0**	**0**	**0**	**0**	**0**	**2**	**0**	**0**	**0**	**2**	**0**	**5**	**0**
	HV%	**-**	**0%**	**-**	**6%**	**-**	**-**	**-**	**-**	**-**	**0%**	**2%**	**-**	**-**	**-**	**0%**	**0%**	**1%**	**0**

Note: Two-hour count summary volumes include heavy vehicles but exclude bicycles in overall count.

Interval Start	Heavy Vehicle Totals					Bicycles					Pedestrians (Crossing Leg)				
	EB	WB	NB	SB	Total	EB	WB	NB	SB	Total	East	West	North	South	Total
4:00 PM	**1**	**0**	**0**	**1**	***2***	**0**	**0**	**0**	**0**	***0***	**0**	**0**	**0**	**0**	*0*
4:15 PM	**0**	**0**	**0**	**0**	***0***	**0**	**0**	**0**	**0**	***0***	**0**	**0**	**0**	**0**	*0*
4:30 PM	**0**	**0**	**0**	**1**	***1***	**0**	**0**	**0**	**0**	***0***	**0**	**0**	**0**	**0**	*0*
4:45 PM	**0**	**0**	**2**	**0**	***2***	**0**	**0**	**0**	**0**	***0***	**0**	**0**	**0**	**0**	***0***
5:00 PM	1	0	0	2	*3*	0	0	0	0	*0*	0	0	0	0	*0*
5:15 PM	0	0	0	1	*1*	0	0	0	0	*0*	0	0	0	0	*0*
5:30 PM	0	0	0	0	*0*	0	0	0	0	*0*	0	0	0	0	*0*
5:45 PM	0	0	0	2	*2*	0	0	0	0	*0*	0	0	0	0	*0*
Count Total	2	0	2	7	*11*	0	0	0	0	*0*	0	0	0	0	*0*
Peak Hr	**1**	**0**	**2**	**2**	***5***	**0**	**0**	**0**	**0**	***0***	**0**	**0**	**0**	**0**	***0***

Two-Hour Count Summaries - Heavy Vehicles

Interval Start	SR 18 EB Ramps				0				Issaquah-Horbart Rd SE				Issaquah-Horbart Rd SE				15-min Total	Rolling One Hour
	Eastbound				Westbound				Northbound				Southbound					
	UT	LT	TH	RT	UT	LT	TH	RT	UT	LT	TH	RT	UT	LT	TH	RT		
4:00 PM	**0**	**0**	**0**	**1**	**0**	**0**	**0**	**0**	**0**	**0**	**0**	**0**	**0**	**0**	**1**	**0**	**2**	0
4:15 PM	**0**	**0**	**0**	**0**	**0**	**0**	**0**	**0**	**0**	**0**	**0**	**0**	**0**	**0**	**0**	**0**	**0**	0
4:30 PM	**0**	**0**	**0**	**0**	**0**	**0**	**0**	**0**	**0**	**0**	**0**	**0**	**0**	**0**	**1**	**0**	**1**	0
4:45 PM	**0**	**0**	**0**	**0**	**0**	**0**	**0**	**0**	**0**	**0**	**2**	**0**	**0**	**0**	**0**	**0**	**2**	**5**
5:00 PM	0	1	0	0	0	0	0	0	0	0	0	0	0	0	2	0	3	6
5:15 PM	0	0	0	0	0	0	0	0	0	0	0	0	0	0	1	0	1	7
5:30 PM	0	0	0	0	0	0	0	0	0	0	0	0	0	0	0	0	0	6
5:45 PM	0	0	0	0	0	0	0	0	0	0	0	0	0	0	2	0	2	6
Count Total	0	1	0	1	0	0	0	0	0	0	2	0	0	0	7	0	11	0
Peak Hour	**0**	**0**	**0**	**1**	**0**	**0**	**0**	**0**	**0**	**0**	**2**	**0**	**0**	**0**	**2**	**0**	**5**	**0**

Two-Hour Count Summaries - Bikes

Interval Start	SR 18 EB Ramps			0			Issaquah-Horbart Rd SE			Issaquah-Horbart Rd SE			15-min Total	Rolling One Hour
	Eastbound			Westbound			Northbound			Southbound				
	LT	TH	RT	LT	TH	RT	LT	TH	RT	LT	TH	RT		
4:00 PM	**0**	**0**	**0**	**0**	**0**	**0**	**0**	**0**	**0**	**0**	**0**	**0**	**0**	0
4:15 PM	**0**	**0**	**0**	**0**	**0**	**0**	**0**	**0**	**0**	**0**	**0**	**0**	**0**	0
4:30 PM	**0**	**0**	**0**	**0**	**0**	**0**	**0**	**0**	**0**	**0**	**0**	**0**	**0**	0
4:45 PM	**0**	**0**	**0**	**0**	**0**	**0**	**0**	**0**	**0**	**0**	**0**	**0**	**0**	**0**
5:00 PM	0	0	0	0	0	0	0	0	0	0	0	0	0	0
5:15 PM	0	0	0	0	0	0	0	0	0	0	0	0	0	0
5:30 PM	0	0	0	0	0	0	0	0	0	0	0	0	0	0
5:45 PM	0	0	0	0	0	0	0	0	0	0	0	0	0	0
Count Total	0	0	0	0	0	0	0	0	0	0	0	0	0	0
Peak Hour	**0**	**0**	**0**	**0**	**0**	**0**	**0**	**0**	**0**	**0**	**0**	**0**	**0**	**0**

Note: U-Turn volumes for bikes are included in Left-Turn, if any.

SR 169
196th Ave

Date: 02-23-2021
Count Period: 7:00 AM to 9:00 AM
Peak Hour: 7:30 AM to 8:30 AM

N

Peak Hour

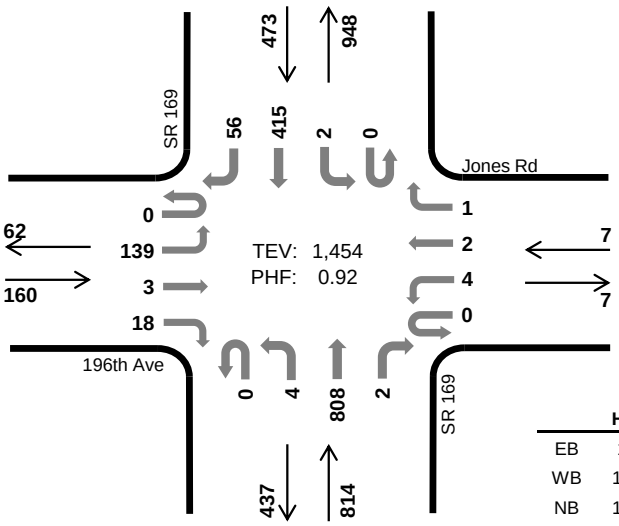

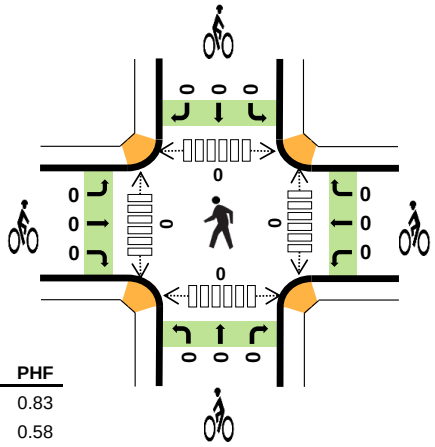

	HV %:	PHF
EB	1.3%	0.83
WB	14.3%	0.58
NB	10.2%	0.93
SB	17.3%	0.76
TOTAL	11.6%	0.92

Two-Hour Count Summaries

Interval Start		196th Ave Eastbound				Jones Rd Westbound				SR 169 Northbound				SR 169 Southbound				15-min Total	Rolling One Hour
		UT	LT	TH	RT	UT	LT	TH	RT	UT	LT	TH	RT	UT	LT	TH	RT		
7:00 AM		0	42	2	7	0	1	0	1	0	1	167	3	0	0	66	6	296	0
7:15 AM		0	44	2	6	0	0	0	0	0	3	194	0	0	0	84	9	342	0
7:30 AM		**0**	**29**	**0**	**3**	**0**	**0**	**0**	**0**	**0**	**2**	**207**	**0**	**0**	**0**	**88**	**8**	**337**	0
7:45 AM		**0**	**41**	**0**	**7**	**0**	**1**	**1**	**0**	**0**	**1**	**216**	**2**	**0**	**1**	**93**	**14**	**377**	1,352
8:00 AM		**0**	**36**	**1**	**6**	**0**	**2**	**0**	**0**	**0**	**0**	**188**	**0**	**0**	**1**	**96**	**17**	**347**	1,403
8:15 AM		**0**	**33**	**2**	**2**	**0**	**1**	**1**	**1**	**0**	**1**	**197**	**0**	**0**	**0**	**138**	**17**	**393**	**1,454**
8:30 AM		0	25	0	4	0	4	1	0	0	1	155	0	0	0	93	21	304	1,421
8:45 AM		0	22	0	8	0	1	0	0	0	1	156	1	0	0	87	14	290	1,334
Count Total		0	272	7	43	0	10	3	2	0	10	1,480	6	0	2	745	106	2,686	0
Peak Hour	**All**	**0**	**139**	**3**	**18**	**0**	**4**	**2**	**1**	**0**	**4**	**808**	**2**	**0**	**2**	**415**	**56**	**1,454**	**0**
	HV	**0**	**2**	**0**	**0**	**0**	**0**	**0**	**1**	**0**	**0**	**83**	**0**	**0**	**1**	**80**	**1**	**168**	**0**
	HV%	**-**	**1%**	**0%**	**0%**	**-**	**0%**	**0%**	**100%**	**-**	**0%**	**10%**	**0%**	**-**	**50%**	**19%**	**2%**	**12%**	**0**

Note: Two-hour count summary volumes include heavy vehicles but exclude bicycles in overall count.

Interval Start	Heavy Vehicle Totals					Bicycles					Pedestrians (Crossing Leg)				
	EB	WB	NB	SB	Total	EB	WB	NB	SB	Total	East	West	North	South	Total
7:00 AM	0	0	21	5	*26*	0	0	0	0	*0*	0	0	0	0	*0*
7:15 AM	3	0	17	15	*35*	0	0	0	0	*0*	0	0	0	0	*0*
7:30 AM	**0**	**0**	**19**	**20**	***39***	**0**	**0**	**0**	**0**	***0***	**0**	**0**	**0**	**0**	*0*
7:45 AM	**1**	**0**	**17**	**17**	***35***	**0**	**0**	**0**	**0**	***0***	**0**	**0**	**0**	**0**	*0*
8:00 AM	**0**	**0**	**17**	**17**	***34***	**0**	**0**	**0**	**0**	***0***	**0**	**0**	**0**	**0**	*0*
8:15 AM	**1**	**1**	**30**	**28**	***60***	**0**	**0**	**0**	**0**	***0***	**0**	**0**	**0**	**0**	***0***
8:30 AM	3	0	24	20	*47*	1	0	0	0	*1*	0	0	0	0	*0*
8:45 AM	1	0	16	16	*33*	0	0	0	0	*0*	0	0	0	0	*0*
Count Total	9	1	161	138	*309*	1	0	0	0	*1*	0	0	0	0	*0*
Peak Hour	**2**	**1**	**83**	**82**	***168***	**0**	**0**	**0**	**0**	***0***	**0**	**0**	**0**	**0**	***0***

Two-Hour Count Summaries - Heavy Vehicles

Interval Start	196th Ave				Jones Rd				SR 169				SR 169				15-min Total	Rolling One Hour
	Eastbound				Westbound				Northbound				Southbound					
	UT	LT	TH	RT	UT	LT	TH	RT	UT	LT	TH	RT	UT	LT	TH	RT		
7:00 AM	0	0	0	0	0	0	0	0	0	0	21	0	0	0	4	1	26	0
7:15 AM	0	1	1	1	0	0	0	0	0	0	17	0	0	0	14	1	35	0
7:30 AM	**0**	**0**	**0**	**0**	**0**	**0**	**0**	**0**	**0**	**0**	**19**	**0**	**0**	**0**	**20**	**0**	**39**	0
7:45 AM	**0**	**1**	**0**	**0**	**0**	**0**	**0**	**0**	**0**	**0**	**17**	**0**	**0**	**0**	**17**	**0**	**35**	135
8:00 AM	**0**	**0**	**0**	**0**	**0**	**0**	**0**	**0**	**0**	**0**	**17**	**0**	**0**	**1**	**16**	**0**	**34**	143
8:15 AM	**0**	**1**	**0**	**0**	**0**	**0**	**0**	**1**	**0**	**0**	**30**	**0**	**0**	**0**	**27**	**1**	**60**	**168**
8:30 AM	0	3	0	0	0	0	0	0	0	0	24	0	0	0	18	2	47	176
8:45 AM	0	0	0	1	0	0	0	0	0	0	16	0	0	0	16	0	33	174
Count Total	0	6	1	2	0	0	0	1	0	0	161	0	0	1	132	5	309	0
Peak Hour	**0**	**2**	**0**	**0**	**0**	**0**	**0**	**1**	**0**	**0**	**83**	**0**	**0**	**1**	**80**	**1**	**168**	**0**

Two-Hour Count Summaries - Bikes

Interval Start	196th Ave			Jones Rd			SR 169			SR 169			15-min Total	Rolling One Hour
	Eastbound			Westbound			Northbound			Southbound				
	LT	TH	RT	LT	TH	RT	LT	TH	RT	LT	TH	RT		
7:00 AM	0	0	0	0	0	0	0	0	0	0	0	0	0	0
7:15 AM	0	0	0	0	0	0	0	0	0	0	0	0	0	0
7:30 AM	**0**	**0**	**0**	**0**	**0**	**0**	**0**	**0**	**0**	**0**	**0**	**0**	**0**	0
7:45 AM	**0**	**0**	**0**	**0**	**0**	**0**	**0**	**0**	**0**	**0**	**0**	**0**	**0**	0
8:00 AM	**0**	**0**	**0**	**0**	**0**	**0**	**0**	**0**	**0**	**0**	**0**	**0**	**0**	0
8:15 AM	**0**	**0**	**0**	**0**	**0**	**0**	**0**	**0**	**0**	**0**	**0**	**0**	**0**	**0**
8:30 AM	1	0	0	0	0	0	0	0	0	0	0	0	1	1
8:45 AM	0	0	0	0	0	0	0	0	0	0	0	0	0	1
Count Total	1	0	0	0	0	0	0	0	0	0	0	0	1	0
Peak Hour	**0**	**0**	**0**	**0**	**0**	**0**	**0**	**0**	**0**	**0**	**0**	**0**	**0**	**0**

Note: U-Turn volumes for bikes are included in Left-Turn, if any.

SR 169
196th Ave

Date: 02-23-2021
Count Period: 11:00 AM to 1:00 PM
Peak Hour: 12:00 PM to 1:00 PM

N

Peak Hour

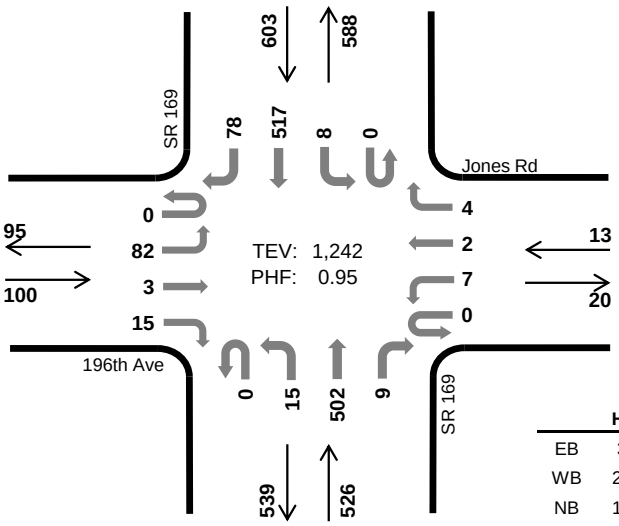

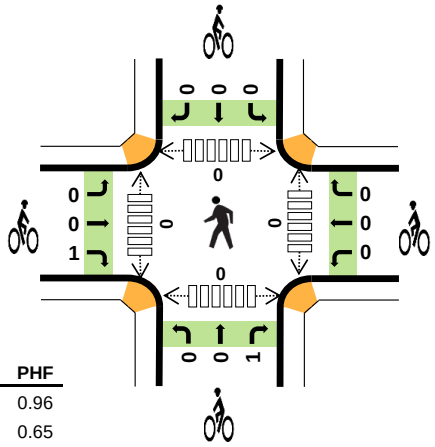

	HV %:	PHF
EB	3.0%	0.96
WB	23.1%	0.65
NB	15.6%	0.97
SB	15.4%	0.93
TOTAL	14.6%	0.95

Two-Hour Count Summaries

Interval Start		196th Ave Eastbound UT	LT	TH	RT	Jones Rd Westbound UT	LT	TH	RT	SR 169 Northbound UT	LT	TH	RT	SR 169 Southbound UT	LT	TH	RT	15-min Total	Rolling One Hour
11:00 AM		0	17	1	7	0	3	0	0	0	1	114	1	0	0	102	15	261	0
11:15 AM		0	13	2	4	0	3	0	1	0	5	108	2	0	1	88	13	240	0
11:30 AM		0	19	1	11	0	0	0	0	0	5	111	1	0	0	108	20	276	0
11:45 AM		0	20	1	6	0	1	0	0	0	5	115	0	0	0	108	19	275	1,052
12:00 PM		**0**	**21**	**0**	**5**	**0**	**1**	**1**	**1**	**0**	**3**	**121**	**3**	**0**	**2**	**138**	**17**	**313**	1,104
12:15 PM		**0**	**20**	**2**	**2**	**0**	**3**	**0**	**0**	**0**	**1**	**128**	**1**	**0**	**2**	**130**	**17**	**306**	1,170
12:30 PM		**0**	**20**	**1**	**5**	**0**	**1**	**0**	**1**	**0**	**6**	**124**	**3**	**0**	**3**	**110**	**22**	**296**	1,190
12:45 PM		**0**	**21**	**0**	**3**	**0**	**2**	**1**	**2**	**0**	**5**	**129**	**2**	**0**	**1**	**139**	**22**	**327**	**1,242**
Count Total		0	151	8	43	0	14	2	5	0	31	950	13	0	9	923	145	2,294	0
Peak Hour	**All**	**0**	**82**	**3**	**15**	**0**	**7**	**2**	**4**	**0**	**15**	**502**	**9**	**0**	**8**	**517**	**78**	**1,242**	**0**
	HV	**0**	**3**	**0**	**0**	**0**	**1**	**0**	**2**	**0**	**2**	**78**	**2**	**0**	**1**	**88**	**4**	**181**	**0**
	HV%	**-**	**4%**	**0%**	**0%**	**-**	**14%**	**0%**	**50%**	**-**	**13%**	**16%**	**22%**	**-**	**13%**	**17%**	**5%**	**15%**	**0**

Note: Two-hour count summary volumes include heavy vehicles but exclude bicycles in overall count.

Interval Start	Heavy Vehicle Totals EB	WB	NB	SB	Total	Bicycles EB	WB	NB	SB	Total	Pedestrians (Crossing Leg) East	West	North	South	Total
11:00 AM	2	1	19	18	*40*	0	0	0	0	*0*	0	0	0	0	*0*
11:15 AM	2	0	14	20	*36*	0	0	0	0	*0*	0	0	0	0	*0*
11:30 AM	1	0	19	22	*42*	0	0	0	0	*0*	0	0	0	0	*0*
11:45 AM	1	0	14	19	*34*	0	0	0	0	*0*	0	0	0	0	*0*
12:00 PM	**1**	**0**	**18**	**29**	***48***	**0**	**0**	**0**	**0**	***0***	**0**	**0**	**0**	**0**	*0*
12:15 PM	**0**	**1**	**25**	**27**	***53***	**0**	**0**	**0**	**0**	***0***	**0**	**0**	**0**	**0**	*0*
12:30 PM	**2**	**0**	**20**	**17**	***39***	**1**	**0**	**0**	**0**	***1***	**0**	**0**	**0**	**0**	*0*
12:45 PM	**0**	**2**	**19**	**20**	***41***	**0**	**0**	**1**	**0**	***1***	**0**	**0**	**0**	**0**	***0***
Count Total	9	4	148	172	*333*	1	0	1	0	*2*	0	0	0	0	*0*
Peak Hour	**3**	**3**	**82**	**93**	***181***	**1**	**0**	**1**	**0**	***2***	**0**	**0**	**0**	**0**	***0***

Two-Hour Count Summaries - Heavy Vehicles

Interval Start	196th Ave				Jones Rd				SR 169				SR 169				15-min Total	Rolling One Hour
	Eastbound				Westbound				Northbound				Southbound					
	UT	LT	TH	RT	UT	LT	TH	RT	UT	LT	TH	RT	UT	LT	TH	RT		
11:00 AM	0	0	1	1	0	1	0	0	0	0	19	0	0	0	18	0	40	0
11:15 AM	0	2	0	0	0	0	0	0	0	0	14	0	0	0	20	0	36	0
11:30 AM	0	0	0	1	0	0	0	0	0	2	17	0	0	0	21	1	42	0
11:45 AM	0	0	1	0	0	0	0	0	0	0	14	0	0	0	19	0	34	152
12:00 PM	**0**	**1**	**0**	**0**	**0**	**0**	**0**	**0**	**0**	**0**	**18**	**0**	**0**	**0**	**27**	**2**	**48**	160
12:15 PM	**0**	**0**	**0**	**0**	**0**	**1**	**0**	**0**	**0**	**0**	**24**	**1**	**0**	**0**	**25**	**2**	**53**	177
12:30 PM	**0**	**2**	**0**	**0**	**0**	**0**	**0**	**0**	**0**	**1**	**18**	**1**	**0**	**1**	**16**	**0**	**39**	174
12:45 PM	**0**	**0**	**0**	**0**	**0**	**0**	**0**	**2**	**0**	**1**	**18**	**0**	**0**	**0**	**20**	**0**	**41**	**181**
Count Total	0	5	2	2	0	2	0	2	0	4	142	2	0	1	166	5	333	0
Peak Hour	**0**	**3**	**0**	**0**	**0**	**1**	**0**	**2**	**0**	**2**	**78**	**2**	**0**	**1**	**88**	**4**	**181**	**0**

Two-Hour Count Summaries - Bikes

Interval Start	196th Ave			Jones Rd			SR 169			SR 169			15-min Total	Rolling One Hour
	Eastbound			Westbound			Northbound			Southbound				
	LT	TH	RT	LT	TH	RT	LT	TH	RT	LT	TH	RT		
11:00 AM	0	0	0	0	0	0	0	0	0	0	0	0	0	0
11:15 AM	0	0	0	0	0	0	0	0	0	0	0	0	0	0
11:30 AM	0	0	0	0	0	0	0	0	0	0	0	0	0	0
11:45 AM	0	0	0	0	0	0	0	0	0	0	0	0	0	0
12:00 PM	**0**	**0**	**0**	**0**	**0**	**0**	**0**	**0**	**0**	**0**	**0**	**0**	**0**	0
12:15 PM	**0**	**0**	**0**	**0**	**0**	**0**	**0**	**0**	**0**	**0**	**0**	**0**	**0**	0
12:30 PM	**0**	**0**	**1**	**0**	**0**	**0**	**0**	**0**	**0**	**0**	**0**	**0**	**1**	1
12:45 PM	**0**	**0**	**0**	**0**	**0**	**0**	**0**	**0**	**1**	**0**	**0**	**0**	**1**	**2**
Count Total	0	0	1	0	0	0	0	0	1	0	0	0	2	0
Peak Hour	**0**	**0**	**1**	**0**	**0**	**0**	**0**	**0**	**1**	**0**	**0**	**0**	**2**	**0**

Note: U-Turn volumes for bikes are included in Left-Turn, if any.

SR 169
196th Ave

Date: 02-23-2021
Count Period: 4:00 PM to 6:00 PM
Peak Hour: 4:00 PM to 5:00 PM

N

Peak Hour

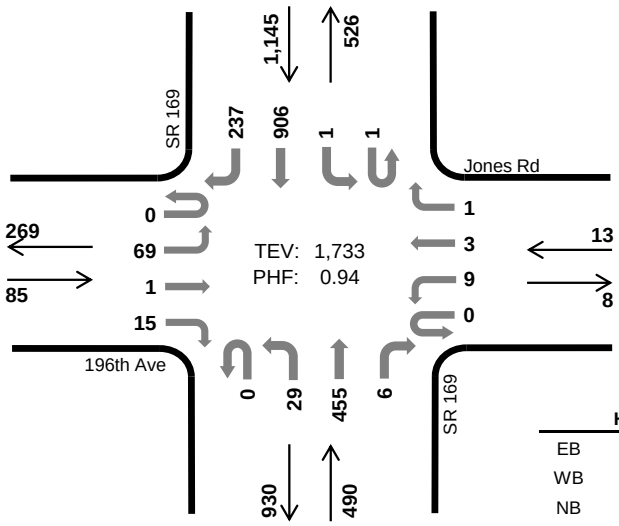

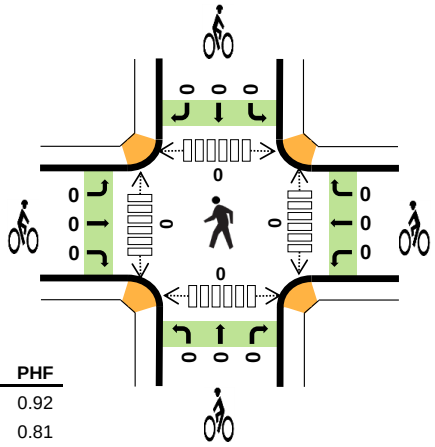

	HV %:	PHF
EB	1.2%	0.92
WB	0.0%	0.81
NB	4.7%	0.87
SB	3.0%	0.97
TOTAL	3.3%	0.94

Two-Hour Count Summaries

Interval Start		196th Ave Eastbound				Jones Rd Westbound				SR 169 Northbound				SR 169 Southbound				15-min Total	Rolling One Hour
		UT	LT	TH	RT	UT	LT	TH	RT	UT	LT	TH	RT	UT	LT	TH	RT		
4:00 PM		**0**	**18**	**0**	**5**	**0**	**3**	**1**	**0**	**0**	**9**	**117**	**0**	**0**	**0**	**226**	**56**	**435**	0
4:15 PM		**0**	**18**	**0**	**3**	**0**	**3**	**1**	**0**	**0**	**6**	**131**	**4**	**0**	**0**	**236**	**58**	**460**	0
4:30 PM		**0**	**18**	**0**	**3**	**0**	**1**	**1**	**0**	**0**	**10**	**114**	**2**	**1**	**0**	**233**	**60**	**443**	0
4:45 PM		**0**	**15**	**1**	**4**	**0**	**2**	**0**	**1**	**0**	**4**	**93**	**0**	**0**	**1**	**211**	**63**	**395**	**1,733**
5:00 PM		0	16	0	2	0	2	0	0	0	12	91	4	0	0	196	60	383	1,681
5:15 PM		0	26	1	7	0	0	1	0	0	9	99	2	0	0	228	63	436	1,657
5:30 PM		0	20	2	2	0	0	2	1	0	6	94	1	0	0	193	56	377	1,591
5:45 PM		0	10	0	5	0	1	0	1	0	6	75	0	0	2	176	49	325	1,521
Count Total		0	141	4	31	0	12	6	3	0	62	814	13	1	3	1,699	465	3,254	0
Peak Hour	**All**	**0**	**69**	**1**	**15**	**0**	**9**	**3**	**1**	**0**	**29**	**455**	**6**	**1**	**1**	**906**	**237**	**1,733**	**0**
	HV	**0**	**0**	**0**	**1**	**0**	**0**	**0**	**0**	**0**	**0**	**23**	**0**	**0**	**0**	**30**	**4**	**58**	**0**
	HV%	**-**	**0%**	**0%**	**7%**	**-**	**0%**	**0%**	**0%**	**-**	**0%**	**5%**	**0%**	**0%**	**0%**	**3%**	**2%**	**3%**	**0**

Note: Two-hour count summary volumes include heavy vehicles but exclude bicycles in overall count.

Interval Start	Heavy Vehicle Totals					Bicycles					Pedestrians (Crossing Leg)				
	EB	WB	NB	SB	Total	EB	WB	NB	SB	Total	East	West	North	South	Total
4:00 PM	**1**	**0**	**12**	**12**	***25***	**0**	**0**	**0**	**0**	***0***	**0**	**0**	**0**	**0**	*0*
4:15 PM	**0**	**0**	**8**	**10**	***18***	**0**	**0**	**0**	**0**	***0***	**0**	**0**	**0**	**0**	*0*
4:30 PM	**0**	**0**	**3**	**9**	***12***	**0**	**0**	**0**	**0**	***0***	**0**	**0**	**0**	**0**	*0*
4:45 PM	**0**	**0**	**0**	**3**	***3***	**0**	**0**	**0**	**0**	***0***	**0**	**0**	**0**	**0**	***0***
5:00 PM	0	0	2	9	*11*	0	0	0	0	*0*	0	0	0	0	*0*
5:15 PM	0	0	3	3	*6*	0	0	0	0	*0*	0	0	0	0	*0*
5:30 PM	1	0	0	2	*3*	0	0	0	0	*0*	0	0	0	0	*0*
5:45 PM	0	1	0	6	*7*	0	0	0	0	*0*	0	0	0	0	*0*
Count Total	2	1	28	54	*85*	0	0	0	0	*0*	0	0	0	0	*0*
Peak Hour	**1**	**0**	**23**	**34**	***58***	**0**	**0**	**0**	**0**	***0***	**0**	**0**	**0**	**0**	***0***

Two-Hour Count Summaries - Heavy Vehicles

Interval Start	196th Ave				Jones Rd				SR 169				SR 169				15-min Total	Rolling One Hour
	Eastbound				Westbound				Northbound				Southbound					
	UT	LT	TH	RT	UT	LT	TH	RT	UT	LT	TH	RT	UT	LT	TH	RT		
4:00 PM	**0**	**0**	**0**	**1**	**0**	**0**	**0**	**0**	**0**	**0**	**12**	**0**	**0**	**0**	**10**	**2**	**25**	0
4:15 PM	**0**	**0**	**0**	**0**	**0**	**0**	**0**	**0**	**0**	**0**	**8**	**0**	**0**	**0**	**10**	**0**	**18**	0
4:30 PM	**0**	**0**	**0**	**0**	**0**	**0**	**0**	**0**	**0**	**0**	**3**	**0**	**0**	**0**	**8**	**1**	**12**	0
4:45 PM	**0**	**0**	**0**	**0**	**0**	**0**	**0**	**0**	**0**	**0**	**0**	**0**	**0**	**0**	**2**	**1**	**3**	**58**
5:00 PM	0	0	0	0	0	0	0	0	0	0	2	0	0	0	9	0	11	44
5:15 PM	0	0	0	0	0	0	0	0	0	0	3	0	0	0	2	1	6	32
5:30 PM	0	1	0	0	0	0	0	0	0	0	0	0	0	0	1	1	3	23
5:45 PM	0	0	0	0	0	0	0	1	0	0	0	0	0	1	5	0	7	27
Count Total	0	1	0	1	0	0	0	1	0	0	28	0	0	1	47	6	85	0
Peak Hour	**0**	**0**	**0**	**1**	**0**	**0**	**0**	**0**	**0**	**0**	**23**	**0**	**0**	**0**	**30**	**4**	**58**	**0**

Two-Hour Count Summaries - Bikes

Interval Start	196th Ave			Jones Rd			SR 169			SR 169			15-min Total	Rolling One Hour
	Eastbound			Westbound			Northbound			Southbound				
	LT	TH	RT	LT	TH	RT	LT	TH	RT	LT	TH	RT		
4:00 PM	**0**	**0**	**0**	**0**	**0**	**0**	**0**	**0**	**0**	**0**	**0**	**0**	**0**	0
4:15 PM	**0**	**0**	**0**	**0**	**0**	**0**	**0**	**0**	**0**	**0**	**0**	**0**	**0**	0
4:30 PM	**0**	**0**	**0**	**0**	**0**	**0**	**0**	**0**	**0**	**0**	**0**	**0**	**0**	0
4:45 PM	**0**	**0**	**0**	**0**	**0**	**0**	**0**	**0**	**0**	**0**	**0**	**0**	**0**	**0**
5:00 PM	0	0	0	0	0	0	0	0	0	0	0	0	0	0
5:15 PM	0	0	0	0	0	0	0	0	0	0	0	0	0	0
5:30 PM	0	0	0	0	0	0	0	0	0	0	0	0	0	0
5:45 PM	0	0	0	0	0	0	0	0	0	0	0	0	0	0
Count Total	0	0	0	0	0	0	0	0	0	0	0	0	0	0
Peak Hour	**0**	**0**	**0**	**0**	**0**	**0**	**0**	**0**	**0**	**0**	**0**	**0**	**0**	**0**

Note: U-Turn volumes for bikes are included in Left-Turn, if any.

SR 169
Cedar Grover Rd SE

Date: 02/23/2021
Count Period: 7:00 AM to 9:00 AM
Peak Hour: 7:30 AM to 8:30 AM

N

Peak Hour

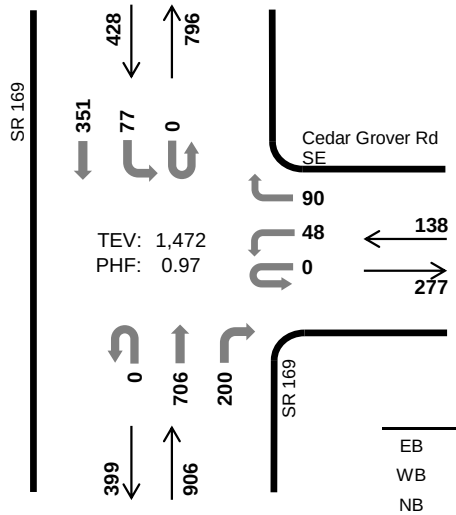

	HV %:	PHF
EB	-	-
WB	29.7%	0.88
NB	7.2%	0.87
SB	18.7%	0.84
TOTAL	12.6%	0.97

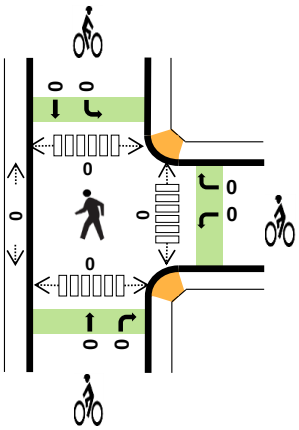

Two-Hour Count Summaries

Interval Start		0				Cedar Grover Rd SE				SR 169				SR 169				15-min Total	Rolling One Hour
		Eastbound				Westbound				Northbound				Southbound					
		UT	LT	TH	RT	UT	LT	TH	RT	UT	LT	TH	RT	UT	LT	TH	RT		
7:00 AM		0	0	0	0	0	13	0	26	0	0	160	48	0	15	59	0	321	0
7:15 AM		0	0	0	0	0	9	0	19	0	0	168	48	0	12	69	0	325	0
7:30 AM		**0**	**0**	**0**	**0**	**0**	**8**	**0**	**18**	**0**	**0**	**203**	**57**	**0**	**14**	**80**	**0**	**380**	0
7:45 AM		**0**	**0**	**0**	**0**	**0**	**10**	**0**	**28**	**0**	**0**	**172**	**46**	**0**	**18**	**90**	**0**	**364**	1,390
8:00 AM		**0**	**0**	**0**	**0**	**0**	**17**	**0**	**22**	**0**	**0**	**176**	**41**	**0**	**20**	**79**	**0**	**355**	1,424
8:15 AM		**0**	**0**	**0**	**0**	**0**	**13**	**0**	**22**	**0**	**0**	**155**	**56**	**0**	**25**	**102**	**0**	**373**	**1,472**
8:30 AM		0	0	0	0	0	14	0	23	0	0	137	29	0	23	96	0	322	1,414
8:45 AM		0	0	0	0	0	16	0	21	0	0	126	31	0	19	72	0	285	1,335
Count Total		0	0	0	0	0	100	0	179	0	0	1,297	356	0	146	647	0	2,725	0
Peak Hour	**All**	**0**	**0**	**0**	**0**	**0**	**48**	**0**	**90**	**0**	**0**	**706**	**200**	**0**	**77**	**351**	**0**	**1,472**	**0**
	HV	**0**	**0**	**0**	**0**	**0**	**15**	**0**	**26**	**0**	**0**	**55**	**10**	**0**	**25**	**55**	**0**	**186**	**0**
	HV%	**-**	**-**	**-**	**-**	**-**	**31%**	**-**	**29%**	**-**	**-**	**8%**	**5%**	**-**	**32%**	**16%**	**-**	**13%**	**0**

Note: Two-hour count summary volumes include heavy vehicles but exclude bicycles in overall count.

Interval Start	Heavy Vehicle Totals					Bicycles					Pedestrians (Crossing Leg)				
	EB	WB	NB	SB	Total	EB	WB	NB	SB	Total	East	West	North	South	Total
7:00 AM	0	8	22	5	*35*	0	0	0	0	*0*	0	0	0	0	*0*
7:15 AM	0	9	16	10	*35*	0	0	0	0	*0*	0	0	0	0	*0*
7:30 AM	**0**	**7**	**18**	**18**	***43***	**0**	**0**	**0**	**0**	***0***	**0**	**0**	**0**	**0**	*0*
7:45 AM	**0**	**4**	**15**	**22**	***41***	**0**	**0**	**0**	**0**	***0***	**0**	**0**	**0**	**0**	*0*
8:00 AM	**0**	**14**	**13**	**16**	***43***	**0**	**0**	**0**	**0**	***0***	**0**	**0**	**0**	**0**	*0*
8:15 AM	**0**	**16**	**19**	**24**	***59***	**0**	**0**	**0**	**0**	***0***	**0**	**0**	**0**	**0**	***0***
8:30 AM	0	10	15	21	*46*	0	0	0	0	*0*	0	0	0	0	*0*
8:45 AM	0	6	19	15	*40*	0	0	0	0	*0*	1	0	0	0	*1*
Count Total	0	74	137	131	*342*	0	0	0	0	*0*	1	0	0	0	*1*
Peak Hr	**0**	**41**	**65**	**80**	***186***	**0**	**0**	**0**	**0**	***0***	**0**	**0**	**0**	**0**	***0***

Two-Hour Count Summaries - Heavy Vehicles

Interval Start	0				Cedar Grover Rd SE				SR 169				SR 169				15-min Total	Rolling One Hour
	Eastbound				Westbound				Northbound				Southbound					
	UT	LT	TH	RT	UT	LT	TH	RT	UT	LT	TH	RT	UT	LT	TH	RT		
7:00 AM	0	0	0	0	0	3	0	5	0	0	20	2	0	5	0	0	35	0
7:15 AM	0	0	0	0	0	2	0	7	0	0	11	5	0	5	5	0	35	0
7:30 AM	**0**	**0**	**0**	**0**	**0**	**2**	**0**	**5**	**0**	**0**	**14**	**4**	**0**	**6**	**12**	**0**	**43**	0
7:45 AM	**0**	**0**	**0**	**0**	**0**	**2**	**0**	**2**	**0**	**0**	**12**	**3**	**0**	**9**	**13**	**0**	**41**	154
8:00 AM	**0**	**0**	**0**	**0**	**0**	**7**	**0**	**7**	**0**	**0**	**12**	**1**	**0**	**4**	**12**	**0**	**43**	162
8:15 AM	**0**	**0**	**0**	**0**	**0**	**4**	**0**	**12**	**0**	**0**	**17**	**2**	**0**	**6**	**18**	**0**	**59**	**186**
8:30 AM	0	0	0	0	0	1	0	9	0	0	14	1	0	9	12	0	46	189
8:45 AM	0	0	0	0	0	2	0	4	0	0	12	7	0	7	8	0	40	188
Count Total	0	0	0	0	0	23	0	51	0	0	112	25	0	51	80	0	342	0
Peak Hour	**0**	**0**	**0**	**0**	**0**	**15**	**0**	**26**	**0**	**0**	**55**	**10**	**0**	**25**	**55**	**0**	**186**	**0**

Two-Hour Count Summaries - Bikes

Interval Start	0			Cedar Grover Rd SE			SR 169			SR 169			15-min Total	Rolling One Hour
	Eastbound			Westbound			Northbound			Southbound				
	LT	TH	RT	LT	TH	RT	LT	TH	RT	LT	TH	RT		
7:00 AM	0	0	0	0	0	0	0	0	0	0	0	0	0	0
7:15 AM	0	0	0	0	0	0	0	0	0	0	0	0	0	0
7:30 AM	**0**	**0**	**0**	**0**	**0**	**0**	**0**	**0**	**0**	**0**	**0**	**0**	**0**	0
7:45 AM	**0**	**0**	**0**	**0**	**0**	**0**	**0**	**0**	**0**	**0**	**0**	**0**	**0**	0
8:00 AM	**0**	**0**	**0**	**0**	**0**	**0**	**0**	**0**	**0**	**0**	**0**	**0**	**0**	0
8:15 AM	**0**	**0**	**0**	**0**	**0**	**0**	**0**	**0**	**0**	**0**	**0**	**0**	**0**	**0**
8:30 AM	0	0	0	0	0	0	0	0	0	0	0	0	0	0
8:45 AM	0	0	0	0	0	0	0	0	0	0	0	0	0	0
Count Total	0	0	0	0	0	0	0	0	0	0	0	0	0	0
Peak Hour	**0**	**0**	**0**	**0**	**0**	**0**	**0**	**0**	**0**	**0**	**0**	**0**	**0**	**0**

Note: U-Turn volumes for bikes are included in Left-Turn, if any.

SR 169
Cedar Grover Rd SE

Date: 02/23/2021
Count Period: 11:00 AM to 1:00 PM
Peak Hour: 12:00 PM to 1:00 PM

N

Peak Hour

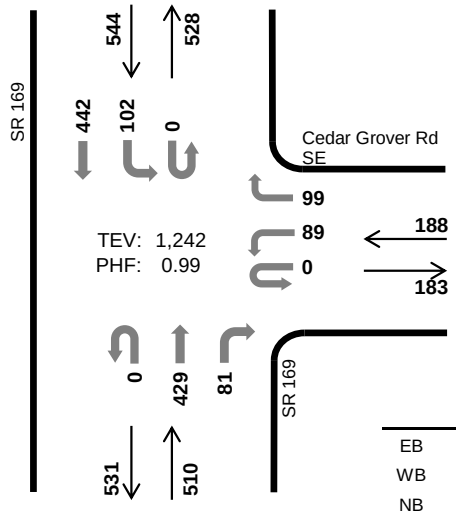

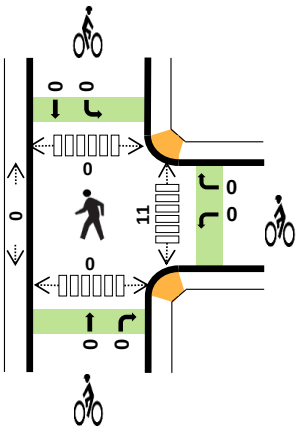

	HV %:	PHF
EB	-	-
WB	33.0%	0.85
NB	9.6%	0.94
SB	17.3%	0.89
TOTAL	16.5%	0.99

Two-Hour Count Summaries

Interval Start		0				Cedar Grover Rd SE				SR 169				SR 169				15-min Total	Rolling One Hour
		Eastbound				Westbound				Northbound				Southbound					
		UT	LT	TH	RT	UT	LT	TH	RT	UT	LT	TH	RT	UT	LT	TH	RT		
11:00 AM		0	0	0	0	0	18	0	24	0	0	97	29	0	23	91	0	282	0
11:15 AM		0	0	0	0	0	11	0	21	0	0	90	24	0	20	78	0	244	0
11:30 AM		0	0	0	0	0	20	0	19	0	0	99	23	0	36	82	0	279	0
11:45 AM		0	0	0	0	0	31	0	20	0	0	94	23	0	23	94	0	285	1,090
12:00 PM		**0**	**0**	**0**	**0**	**0**	**24**	**0**	**31**	**0**	**0**	**101**	**26**	**0**	**30**	**98**	**0**	**310**	1,118
12:15 PM		**0**	**0**	**0**	**0**	**0**	**23**	**0**	**25**	**0**	**0**	**108**	**23**	**0**	**23**	**111**	**0**	**313**	1,187
12:30 PM		**0**	**0**	**0**	**0**	**0**	**22**	**0**	**22**	**0**	**0**	**118**	**17**	**0**	**24**	**106**	**0**	**309**	1,217
12:45 PM		**0**	**0**	**0**	**0**	**0**	**20**	**0**	**21**	**0**	**0**	**102**	**15**	**0**	**25**	**127**	**0**	**310**	**1,242**
Count Total		0	0	0	0	0	169	0	183	0	0	809	180	0	204	787	0	2,332	0
Peak Hour	**All**	**0**	**0**	**0**	**0**	**0**	**89**	**0**	**99**	**0**	**0**	**429**	**81**	**0**	**102**	**442**	**0**	**1,242**	**0**
	HV	**0**	**0**	**0**	**0**	**0**	**16**	**0**	**46**	**0**	**0**	**37**	**12**	**0**	**43**	**51**	**0**	**205**	**0**
	HV%	**-**	**-**	**-**	**-**	**-**	**18%**	**-**	**46%**	**-**	**-**	**9%**	**15%**	**-**	**42%**	**12%**	**-**	**17%**	**0**

Note: Two-hour count summary volumes include heavy vehicles but exclude bicycles in overall count.

Interval Start	Heavy Vehicle Totals					Bicycles					Pedestrians (Crossing Leg)				
	EB	WB	NB	SB	Total	EB	WB	NB	SB	Total	East	West	North	South	Total
11:00 AM	0	18	16	24	*58*	0	0	0	0	*0*	1	0	0	0	*1*
11:15 AM	0	11	11	19	*41*	0	0	0	0	*0*	0	0	0	0	*0*
11:30 AM	0	12	18	17	*47*	0	0	0	0	*0*	0	0	0	0	*0*
11:45 AM	0	16	8	21	*45*	0	0	0	0	*0*	3	0	0	0	*3*
12:00 PM	**0**	**18**	**10**	**28**	***56***	**0**	**0**	**0**	**0**	***0***	**1**	**0**	**0**	**0**	*1*
12:15 PM	**0**	**17**	**16**	**26**	***59***	**0**	**0**	**0**	**0**	***0***	**2**	**0**	**0**	**0**	*2*
12:30 PM	**0**	**16**	**11**	**17**	***44***	**0**	**0**	**0**	**0**	***0***	**5**	**0**	**0**	**0**	*5*
12:45 PM	**0**	**11**	**12**	**23**	***46***	**0**	**0**	**0**	**0**	***0***	**3**	**0**	**0**	**0**	***3***
Count Total	0	119	102	175	*396*	0	0	0	0	*0*	15	0	0	0	*15*
Peak Hr	**0**	**62**	**49**	**94**	***205***	**0**	**0**	**0**	**0**	***0***	**11**	**0**	**0**	**0**	***11***

Two-Hour Count Summaries - Heavy Vehicles

Interval Start	0				Cedar Grover Rd SE				SR 169				SR 169				15-min Total	Rolling One Hour
	Eastbound				Westbound				Northbound				Southbound					
	UT	LT	TH	RT	UT	LT	TH	RT	UT	LT	TH	RT	UT	LT	TH	RT		
11:00 AM	0	0	0	0	0	8	0	10	0	0	11	5	0	10	14	0	58	0
11:15 AM	0	0	0	0	0	3	0	8	0	0	8	3	0	7	12	0	41	0
11:30 AM	0	0	0	0	0	4	0	8	0	0	10	8	0	12	5	0	47	0
11:45 AM	0	0	0	0	0	8	0	8	0	0	2	6	0	12	9	0	45	191
12:00 PM	**0**	**0**	**0**	**0**	**0**	**3**	**0**	**15**	**0**	**0**	**7**	**3**	**0**	**15**	**13**	**0**	**56**	189
12:15 PM	**0**	**0**	**0**	**0**	**0**	**4**	**0**	**13**	**0**	**0**	**12**	**4**	**0**	**15**	**11**	**0**	**59**	207
12:30 PM	**0**	**0**	**0**	**0**	**0**	**6**	**0**	**10**	**0**	**0**	**8**	**3**	**0**	**7**	**10**	**0**	**44**	204
12:45 PM	**0**	**0**	**0**	**0**	**0**	**3**	**0**	**8**	**0**	**0**	**10**	**2**	**0**	**6**	**17**	**0**	**46**	**205**
Count Total	0	0	0	0	0	39	0	80	0	0	68	34	0	84	91	0	396	0
Peak Hour	**0**	**0**	**0**	**0**	**0**	**16**	**0**	**46**	**0**	**0**	**37**	**12**	**0**	**43**	**51**	**0**	**205**	**0**

Two-Hour Count Summaries - Bikes

Interval Start	0			Cedar Grover Rd SE			SR 169			SR 169			15-min Total	Rolling One Hour
	Eastbound			Westbound			Northbound			Southbound				
	LT	TH	RT	LT	TH	RT	LT	TH	RT	LT	TH	RT		
11:00 AM	0	0	0	0	0	0	0	0	0	0	0	0	0	0
11:15 AM	0	0	0	0	0	0	0	0	0	0	0	0	0	0
11:30 AM	0	0	0	0	0	0	0	0	0	0	0	0	0	0
11:45 AM	0	0	0	0	0	0	0	0	0	0	0	0	0	0
12:00 PM	**0**	**0**	**0**	**0**	**0**	**0**	**0**	**0**	**0**	**0**	**0**	**0**	**0**	0
12:15 PM	**0**	**0**	**0**	**0**	**0**	**0**	**0**	**0**	**0**	**0**	**0**	**0**	**0**	0
12:30 PM	**0**	**0**	**0**	**0**	**0**	**0**	**0**	**0**	**0**	**0**	**0**	**0**	**0**	0
12:45 PM	**0**	**0**	**0**	**0**	**0**	**0**	**0**	**0**	**0**	**0**	**0**	**0**	**0**	**0**
Count Total	0	0	0	0	0	0	0	0	0	0	0	0	0	0
Peak Hour	**0**	**0**	**0**	**0**	**0**	**0**	**0**	**0**	**0**	**0**	**0**	**0**	**0**	**0**

Note: U-Turn volumes for bikes are included in Left-Turn, if any.

SR 169
Cedar Grover Rd SE

Date: 02/23/2021
Count Period: 4:00 PM to 6:00 PM
Peak Hour: 4:15 PM to 5:15 PM

N

Peak Hour

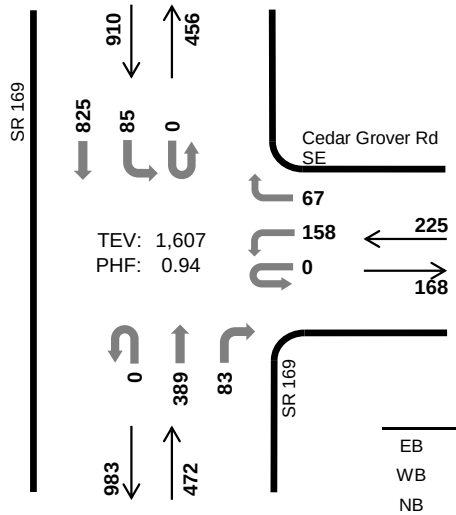

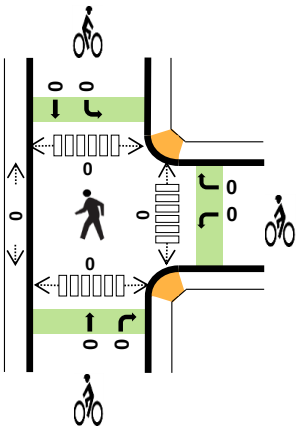

	HV %:	PHF
EB	-	-
WB	1.3%	0.89
NB	2.5%	0.87
SB	3.1%	0.91
TOTAL	2.7%	0.94

Two-Hour Count Summaries

Interval Start	0				Cedar Grover Rd SE				SR 169				SR 169				15-min Total	Rolling One Hour
	Eastbound				Westbound				Northbound				Southbound					
	UT	LT	TH	RT	UT	LT	TH	RT	UT	LT	TH	RT	UT	LT	TH	RT		
4:00 PM	0	0	0	0	0	37	0	26	0	0	112	14	0	14	194	0	397	0
4:15 PM	**0**	**0**	**0**	**0**	**0**	**37**	**0**	**26**	**0**	**0**	**107**	**21**	**0**	**20**	**215**	**0**	**426**	0
4:30 PM	**0**	**0**	**0**	**0**	**0**	**39**	**0**	**20**	**0**	**0**	**101**	**18**	**0**	**24**	**227**	**0**	**429**	0
4:45 PM	**0**	**0**	**0**	**0**	**0**	**46**	**0**	**9**	**0**	**0**	**76**	**13**	**0**	**22**	**188**	**0**	**354**	1,606
5:00 PM	**0**	**0**	**0**	**0**	**0**	**36**	**0**	**12**	**0**	**0**	**105**	**31**	**0**	**19**	**195**	**0**	**398**	**1,607**
5:15 PM	0	0	0	0	0	36	0	18	0	0	92	19	0	15	199	0	379	1,560
5:30 PM	0	0	0	0	0	37	0	16	0	0	81	18	0	24	194	0	370	1,501
5:45 PM	0	0	0	0	0	29	0	9	0	0	72	7	0	18	150	0	285	1,432
Count Total	0	0	0	0	0	297	0	136	0	0	746	141	0	156	1,562	0	3,038	0
Peak Hour All	**0**	**0**	**0**	**0**	**0**	**158**	**0**	**67**	**0**	**0**	**389**	**83**	**0**	**85**	**825**	**0**	**1,607**	**0**
Peak Hour HV	**0**	**0**	**0**	**0**	**0**	**1**	**0**	**2**	**0**	**0**	**11**	**1**	**0**	**7**	**21**	**0**	**43**	**0**
Peak Hour HV%	**-**	**-**	**-**	**-**	**-**	**1%**	**-**	**3%**	**-**	**-**	**3%**	**1%**	**-**	**8%**	**3%**	**-**	**3%**	**0**

Note: Two-hour count summary volumes include heavy vehicles but exclude bicycles in overall count.

Interval Start	Heavy Vehicle Totals					Bicycles					Pedestrians (Crossing Leg)				
	EB	WB	NB	SB	Total	EB	WB	NB	SB	Total	East	West	North	South	Total
4:00 PM	0	3	12	10	*25*	0	0	0	0	*0*	1	0	0	0	*1*
4:15 PM	**0**	**2**	**5**	**8**	***15***	**0**	**0**	**0**	**0**	***0***	**0**	**0**	**0**	**0**	*0*
4:30 PM	**0**	**0**	**3**	**8**	***11***	**0**	**0**	**0**	**0**	***0***	**0**	**0**	**0**	**0**	*0*
4:45 PM	**0**	**0**	**0**	**4**	***4***	**0**	**0**	**0**	**0**	***0***	**0**	**0**	**0**	**0**	*0*
5:00 PM	**0**	**1**	**4**	**8**	***13***	**0**	**0**	**0**	**0**	***0***	**0**	**0**	**0**	**0**	***0***
5:15 PM	0	1	0	3	*4*	0	0	0	0	*0*	0	0	0	0	*0*
5:30 PM	0	0	1	1	*2*	0	0	0	0	*0*	0	0	0	0	*0*
5:45 PM	0	0	0	4	*4*	0	0	0	0	*0*	0	0	0	0	*0*
Count Total	0	7	25	46	*78*	0	0	0	0	*0*	1	0	0	0	*1*
Peak Hr	**0**	**3**	**12**	**28**	***43***	**0**	**0**	**0**	**0**	***0***	**0**	**0**	**0**	**0**	***0***

Two-Hour Count Summaries - Heavy Vehicles

Interval Start	0				Cedar Grover Rd SE				SR 169				SR 169				15-min Total	Rolling One Hour
	Eastbound				Westbound				Northbound				Southbound					
	UT	LT	TH	RT	UT	LT	TH	RT	UT	LT	TH	RT	UT	LT	TH	RT		
4:00 PM	0	0	0	0	0	0	0	3	0	0	11	1	0	1	9	0	25	0
4:15 PM	**0**	**0**	**0**	**0**	**0**	**0**	**0**	**2**	**0**	**0**	**4**	**1**	**0**	**1**	**7**	**0**	**15**	0
4:30 PM	**0**	**0**	**0**	**0**	**0**	**0**	**0**	**0**	**0**	**0**	**3**	**0**	**0**	**0**	**8**	**0**	**11**	0
4:45 PM	**0**	**0**	**0**	**0**	**0**	**0**	**0**	**0**	**0**	**0**	**0**	**0**	**0**	**2**	**2**	**0**	**4**	55
5:00 PM	**0**	**0**	**0**	**0**	**0**	**1**	**0**	**0**	**0**	**0**	**4**	**0**	**0**	**4**	**4**	**0**	**13**	**43**
5:15 PM	0	0	0	0	0	0	0	1	0	0	0	0	0	0	3	0	4	32
5:30 PM	0	0	0	0	0	0	0	0	0	0	0	1	0	0	1	0	2	23
5:45 PM	0	0	0	0	0	0	0	0	0	0	0	0	0	3	1	0	4	23
Count Total	0	0	0	0	0	1	0	6	0	0	22	3	0	11	35	0	78	0
Peak Hour	**0**	**0**	**0**	**0**	**0**	**1**	**0**	**2**	**0**	**0**	**11**	**1**	**0**	**7**	**21**	**0**	**43**	**0**

Two-Hour Count Summaries - Bikes

Interval Start	0			Cedar Grover Rd SE			SR 169			SR 169			15-min Total	Rolling One Hour
	Eastbound			Westbound			Northbound			Southbound				
	LT	TH	RT	LT	TH	RT	LT	TH	RT	LT	TH	RT		
4:00 PM	0	0	0	0	0	0	0	0	0	0	0	0	0	0
4:15 PM	**0**	**0**	**0**	**0**	**0**	**0**	**0**	**0**	**0**	**0**	**0**	**0**	**0**	0
4:30 PM	**0**	**0**	**0**	**0**	**0**	**0**	**0**	**0**	**0**	**0**	**0**	**0**	**0**	0
4:45 PM	**0**	**0**	**0**	**0**	**0**	**0**	**0**	**0**	**0**	**0**	**0**	**0**	**0**	0
5:00 PM	**0**	**0**	**0**	**0**	**0**	**0**	**0**	**0**	**0**	**0**	**0**	**0**	**0**	**0**
5:15 PM	0	0	0	0	0	0	0	0	0	0	0	0	0	0
5:30 PM	0	0	0	0	0	0	0	0	0	0	0	0	0	0
5:45 PM	0	0	0	0	0	0	0	0	0	0	0	0	0	0
Count Total	0	0	0	0	0	0	0	0	0	0	0	0	0	0
Peak Hour	**0**	**0**	**0**	**0**	**0**	**0**	**0**	**0**	**0**	**0**	**0**	**0**	**0**	**0**

Note: U-Turn volumes for bikes are included in Left-Turn, if any.

Jefferson Ave NE
NE 3rd St

Date: 02-23-2021
Count Period: 7:00 AM to 9:00 AM
Peak Hour: 7:15 AM to 8:15 AM

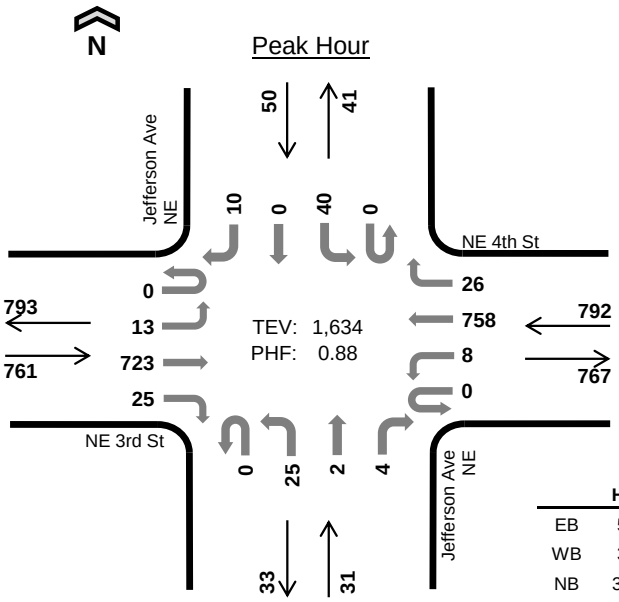

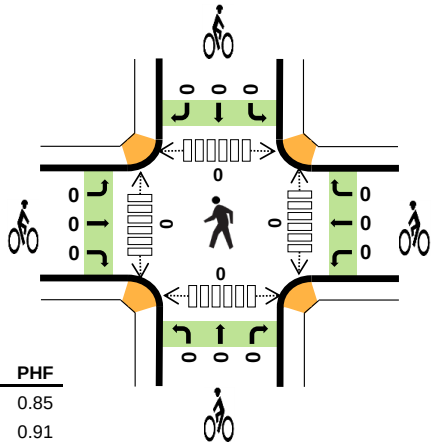

	HV %:	PHF
EB	5.9%	0.85
WB	3.0%	0.91
NB	35.5%	0.60
SB	2.0%	0.74
TOTAL	5.0%	0.88

Two-Hour Count Summaries

Interval Start	NE 3rd St Eastbound UT	LT	TH	RT	NE 4th St Westbound UT	LT	TH	RT	Jefferson Ave NE Northbound UT	LT	TH	RT	Jefferson Ave NE Southbound UT	LT	TH	RT	15-min Total	Rolling One Hour
7:00 AM	0	0	137	6	0	0	169	4	0	3	0	3	0	5	0	0	327	0
7:15 AM	**0**	**3**	**181**	**7**	**0**	**1**	**176**	**7**	**0**	**1**	**0**	**0**	**0**	**9**	**0**	**0**	**385**	0
7:30 AM	**0**	**2**	**165**	**6**	**0**	**2**	**191**	**1**	**0**	**8**	**1**	**4**	**0**	**13**	**0**	**4**	**397**	0
7:45 AM	**0**	**5**	**213**	**6**	**0**	**4**	**205**	**8**	**0**	**10**	**1**	**0**	**0**	**9**	**0**	**2**	**463**	1,572
8:00 AM	**0**	**3**	**164**	**6**	**0**	**1**	**186**	**10**	**0**	**6**	**0**	**0**	**0**	**9**	**0**	**4**	**389**	**1,634**
8:15 AM	0	3	166	6	0	2	179	9	0	8	0	0	0	4	0	2	379	1,628
8:30 AM	0	2	189	4	0	2	166	6	0	6	0	2	0	9	0	6	392	1,623
8:45 AM	0	3	174	2	0	3	205	4	0	6	0	1	0	10	0	4	412	1,572
Count Total	0	21	1,389	43	0	15	1,477	49	0	48	2	10	0	68	0	22	3,144	0
Peak Hour All	**0**	**13**	**723**	**25**	**0**	**8**	**758**	**26**	**0**	**25**	**2**	**4**	**0**	**40**	**0**	**10**	**1,634**	**0**
Peak Hour HV	**0**	**0**	**30**	**15**	**0**	**2**	**21**	**1**	**0**	**10**	**0**	**1**	**0**	**1**	**0**	**0**	**81**	**0**
Peak Hour HV%	**-**	**0%**	**4%**	**60%**	**-**	**25%**	**3%**	**4%**	**-**	**40%**	**0%**	**25%**	**-**	**3%**	**-**	**0%**	**5%**	**0**

Note: Two-hour count summary volumes include heavy vehicles but exclude bicycles in overall count.

Interval Start	Heavy Vehicle Totals EB	WB	NB	SB	Total	Bicycles EB	WB	NB	SB	Total	Pedestrians (Crossing Leg) East	West	North	South	Total
7:00 AM	6	4	1	0	*11*	0	0	0	0	*0*	0	0	0	0	*0*
7:15 AM	**8**	**3**	**0**	**0**	***11***	**0**	**0**	**0**	**0**	***0***	**0**	**0**	**0**	**0**	*0*
7:30 AM	**9**	**7**	**3**	**1**	***20***	**0**	**0**	**0**	**0**	***0***	**0**	**0**	**0**	**0**	*0*
7:45 AM	**13**	**9**	**4**	**0**	***26***	**0**	**0**	**0**	**0**	***0***	**0**	**0**	**0**	**0**	*0*
8:00 AM	**15**	**5**	**4**	**0**	***24***	**0**	**0**	**0**	**0**	***0***	**0**	**0**	**0**	**0**	***0***
8:15 AM	16	6	7	1	*30*	0	0	0	0	*0*	0	0	0	0	*0*
8:30 AM	8	8	4	0	*20*	0	0	0	0	*0*	0	0	0	0	*0*
8:45 AM	10	6	4	1	*21*	0	0	0	0	*0*	0	0	0	0	*0*
Count Total	85	48	27	3	*163*	0	0	0	0	*0*	0	0	0	0	*0*
Peak Hour	**45**	**24**	**11**	**1**	***81***	**0**	**0**	**0**	**0**	***0***	**0**	**0**	**0**	**0**	***0***

Two-Hour Count Summaries - Heavy Vehicles

Interval Start	NE 3rd St				NE 4th St				Jefferson Ave NE				Jefferson Ave NE				15-min Total	Rolling One Hour
	Eastbound				Westbound				Northbound				Southbound					
	UT	LT	TH	RT	UT	LT	TH	RT	UT	LT	TH	RT	UT	LT	TH	RT		
7:00 AM	0	0	6	0	0	0	4	0	0	1	0	0	0	0	0	0	11	0
7:15 AM	**0**	**0**	**6**	**2**	**0**	**0**	**3**	**0**	**0**	**0**	**0**	**0**	**0**	**0**	**0**	**0**	**11**	0
7:30 AM	**0**	**0**	**7**	**2**	**0**	**0**	**7**	**0**	**0**	**2**	**0**	**1**	**0**	**1**	**0**	**0**	**20**	0
7:45 AM	**0**	**0**	**7**	**6**	**0**	**2**	**6**	**1**	**0**	**4**	**0**	**0**	**0**	**0**	**0**	**0**	**26**	68
8:00 AM	**0**	**0**	**10**	**5**	**0**	**0**	**5**	**0**	**0**	**4**	**0**	**0**	**0**	**0**	**0**	**0**	**24**	**81**
8:15 AM	0	0	10	6	0	1	5	0	0	7	0	0	0	1	0	0	30	100
8:30 AM	0	0	6	2	0	1	7	0	0	3	0	1	0	0	0	0	20	100
8:45 AM	0	0	9	1	0	1	5	0	0	4	0	0	0	1	0	0	21	95
Count Total	0	0	61	24	0	5	42	1	0	25	0	2	0	3	0	0	163	0
Peak Hour	**0**	**0**	**30**	**15**	**0**	**2**	**21**	**1**	**0**	**10**	**0**	**1**	**0**	**1**	**0**	**0**	**81**	**0**

Two-Hour Count Summaries - Bikes

Interval Start	NE 3rd St			NE 4th St			Jefferson Ave NE			Jefferson Ave NE			15-min Total	Rolling One Hour
	Eastbound			Westbound			Northbound			Southbound				
	LT	TH	RT	LT	TH	RT	LT	TH	RT	LT	TH	RT		
7:00 AM	0	0	0	0	0	0	0	0	0	0	0	0	0	0
7:15 AM	**0**	**0**	**0**	**0**	**0**	**0**	**0**	**0**	**0**	**0**	**0**	**0**	**0**	0
7:30 AM	**0**	**0**	**0**	**0**	**0**	**0**	**0**	**0**	**0**	**0**	**0**	**0**	**0**	0
7:45 AM	**0**	**0**	**0**	**0**	**0**	**0**	**0**	**0**	**0**	**0**	**0**	**0**	**0**	0
8:00 AM	**0**	**0**	**0**	**0**	**0**	**0**	**0**	**0**	**0**	**0**	**0**	**0**	**0**	**0**
8:15 AM	0	0	0	0	0	0	0	0	0	0	0	0	0	0
8:30 AM	0	0	0	0	0	0	0	0	0	0	0	0	0	0
8:45 AM	0	0	0	0	0	0	0	0	0	0	0	0	0	0
Count Total	0	0	0	0	0	0	0	0	0	0	0	0	0	0
Peak Hour	**0**	**0**	**0**	**0**	**0**	**0**	**0**	**0**	**0**	**0**	**0**	**0**	**0**	**0**

Note: U-Turn volumes for bikes are included in Left-Turn, if any.

Jefferson Ave NE
NE 3rd St

Date: 02-23-2021
Count Period: 11:00 AM to 1:00 PM
Peak Hour: 12:00 PM to 1:00 PM

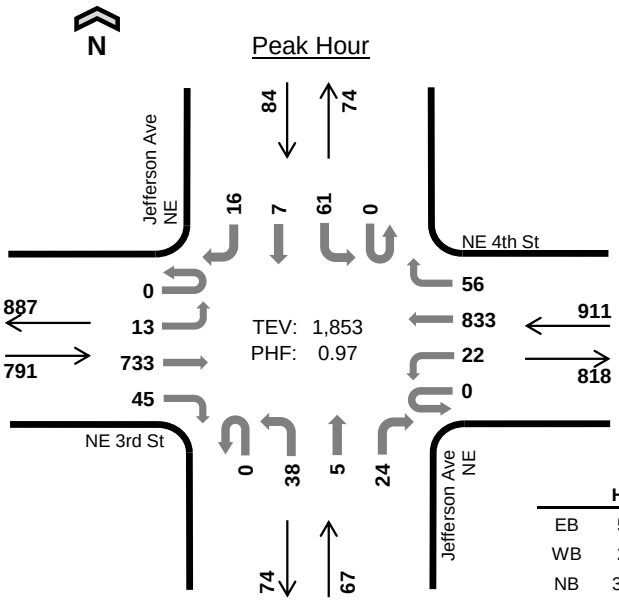

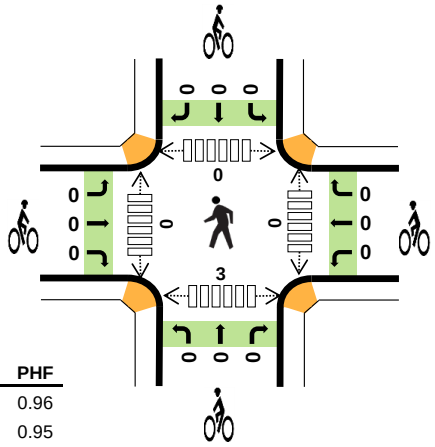

	HV %:	PHF
EB	5.2%	0.96
WB	2.9%	0.95
NB	31.3%	0.70
SB	2.4%	0.81
TOTAL	4.9%	0.97

Two-Hour Count Summaries

Interval Start		NE 3rd St Eastbound				NE 4th St Westbound				Jefferson Ave NE Northbound				Jefferson Ave NE Southbound				15-min Total	Rolling One Hour
		UT	LT	TH	RT	UT	LT	TH	RT	UT	LT	TH	RT	UT	LT	TH	RT		
11:00 AM		0	3	182	7	0	4	165	7	0	10	3	5	0	8	1	2	397	0
11:15 AM		0	4	205	6	0	1	191	16	0	9	0	6	0	17	0	5	460	0
11:30 AM		0	3	218	7	0	4	204	13	0	7	3	2	0	10	2	2	475	0
11:45 AM		0	3	201	11	0	5	183	12	0	5	1	6	0	9	0	0	436	1,768
12:00 PM		**0**	**2**	**190**	**10**	**0**	**7**	**222**	**11**	**0**	**8**	**0**	**5**	**0**	**16**	**2**	**4**	**477**	1,848
12:15 PM		**0**	**6**	**171**	**11**	**0**	**4**	**212**	**19**	**0**	**10**	**1**	**5**	**0**	**17**	**2**	**4**	**462**	1,850
12:30 PM		**0**	**3**	**192**	**12**	**0**	**6**	**189**	**15**	**0**	**8**	**1**	**5**	**0**	**10**	**2**	**1**	**444**	1,819
12:45 PM		**0**	**2**	**180**	**12**	**0**	**5**	**210**	**11**	**0**	**12**	**3**	**9**	**0**	**18**	**1**	**7**	**470**	**1,853**
Count Total		0	26	1,539	76	0	36	1,576	104	0	69	12	43	0	105	10	25	3,621	0
Peak Hour	**All**	**0**	**13**	**733**	**45**	**0**	**22**	**833**	**56**	**0**	**38**	**5**	**24**	**0**	**61**	**7**	**16**	**1,853**	**0**
	HV	**0**	**1**	**19**	**21**	**0**	**2**	**23**	**1**	**0**	**20**	**0**	**1**	**0**	**0**	**1**	**1**	**90**	**0**
	HV%	**-**	**8%**	**3%**	**47%**	**-**	**9%**	**3%**	**2%**	**-**	**53%**	**0%**	**4%**	**-**	**0%**	**14%**	**6%**	**5%**	**0**

Note: Two-hour count summary volumes include heavy vehicles but exclude bicycles in overall count.

Interval Start	Heavy Vehicle Totals					Bicycles					Pedestrians (Crossing Leg)				
	EB	WB	NB	SB	Total	EB	WB	NB	SB	Total	East	West	North	South	Total
11:00 AM	12	5	5	1	*23*	0	0	0	0	*0*	0	1	0	0	*1*
11:15 AM	9	5	7	0	*21*	0	0	0	0	*0*	0	1	0	0	*1*
11:30 AM	8	4	2	0	*14*	0	0	0	0	*0*	0	0	0	2	*2*
11:45 AM	10	7	1	0	*18*	0	0	0	0	*0*	0	0	0	2	*2*
12:00 PM	**9**	**7**	**4**	**1**	***21***	**0**	**0**	**0**	**0**	***0***	**0**	**0**	**0**	**1**	*1*
12:15 PM	**9**	**8**	**8**	**0**	***25***	**0**	**0**	**0**	**0**	***0***	**0**	**0**	**0**	**2**	*2*
12:30 PM	**13**	**5**	**5**	**0**	***23***	**0**	**0**	**0**	**0**	***0***	**0**	**0**	**0**	**0**	*0*
12:45 PM	**10**	**6**	**4**	**1**	***21***	**0**	**0**	**0**	**0**	***0***	**0**	**0**	**0**	**0**	***0***
Count Total	80	47	36	3	*166*	0	0	0	0	*0*	0	2	0	7	*9*
Peak Hour	**41**	**26**	**21**	**2**	***90***	**0**	**0**	**0**	**0**	***0***	**0**	**0**	**0**	**3**	***3***

Two-Hour Count Summaries - Heavy Vehicles

Interval Start	NE 3rd St				NE 4th St				Jefferson Ave NE				Jefferson Ave NE				15-min Total	Rolling One Hour
	Eastbound				Westbound				Northbound				Southbound					
	UT	LT	TH	RT	UT	LT	TH	RT	UT	LT	TH	RT	UT	LT	TH	RT		
11:00 AM	0	0	5	7	0	0	5	0	0	5	0	0	0	1	0	0	23	0
11:15 AM	0	0	6	3	0	0	5	0	0	7	0	0	0	0	0	0	21	0
11:30 AM	0	0	8	0	0	0	4	0	0	2	0	0	0	0	0	0	14	0
11:45 AM	0	0	7	3	0	1	6	0	0	1	0	0	0	0	0	0	18	76
12:00 PM	**0**	**0**	**3**	**6**	**0**	**1**	**6**	**0**	**0**	**4**	**0**	**0**	**0**	**0**	**1**	**0**	**21**	74
12:15 PM	**0**	**1**	**4**	**4**	**0**	**1**	**6**	**1**	**0**	**7**	**0**	**1**	**0**	**0**	**0**	**0**	**25**	78
12:30 PM	**0**	**0**	**7**	**6**	**0**	**0**	**5**	**0**	**0**	**5**	**0**	**0**	**0**	**0**	**0**	**0**	**23**	87
12:45 PM	**0**	**0**	**5**	**5**	**0**	**0**	**6**	**0**	**0**	**4**	**0**	**0**	**0**	**0**	**0**	**1**	**21**	**90**
Count Total	0	1	45	34	0	3	43	1	0	35	0	1	0	1	1	1	166	0
Peak Hour	**0**	**1**	**19**	**21**	**0**	**2**	**23**	**1**	**0**	**20**	**0**	**1**	**0**	**0**	**1**	**1**	**90**	**0**

Two-Hour Count Summaries - Bikes

Interval Start	NE 3rd St			NE 4th St			Jefferson Ave NE			Jefferson Ave NE			15-min Total	Rolling One Hour
	Eastbound			Westbound			Northbound			Southbound				
	LT	TH	RT	LT	TH	RT	LT	TH	RT	LT	TH	RT		
11:00 AM	0	0	0	0	0	0	0	0	0	0	0	0	0	0
11:15 AM	0	0	0	0	0	0	0	0	0	0	0	0	0	0
11:30 AM	0	0	0	0	0	0	0	0	0	0	0	0	0	0
11:45 AM	0	0	0	0	0	0	0	0	0	0	0	0	0	0
12:00 PM	**0**	**0**	**0**	**0**	**0**	**0**	**0**	**0**	**0**	**0**	**0**	**0**	**0**	0
12:15 PM	**0**	**0**	**0**	**0**	**0**	**0**	**0**	**0**	**0**	**0**	**0**	**0**	**0**	0
12:30 PM	**0**	**0**	**0**	**0**	**0**	**0**	**0**	**0**	**0**	**0**	**0**	**0**	**0**	0
12:45 PM	**0**	**0**	**0**	**0**	**0**	**0**	**0**	**0**	**0**	**0**	**0**	**0**	**0**	**0**
Count Total	0	0	0	0	0	0	0	0	0	0	0	0	0	0
Peak Hour	**0**	**0**	**0**	**0**	**0**	**0**	**0**	**0**	**0**	**0**	**0**	**0**	**0**	**0**

Note: U-Turn volumes for bikes are included in Left-Turn, if any.

Jefferson Ave NE
NE 3rd St

Date: 02-23-2021
Count Period: 4:00 PM to 6:00 PM
Peak Hour: 5:00 PM to 6:00 PM

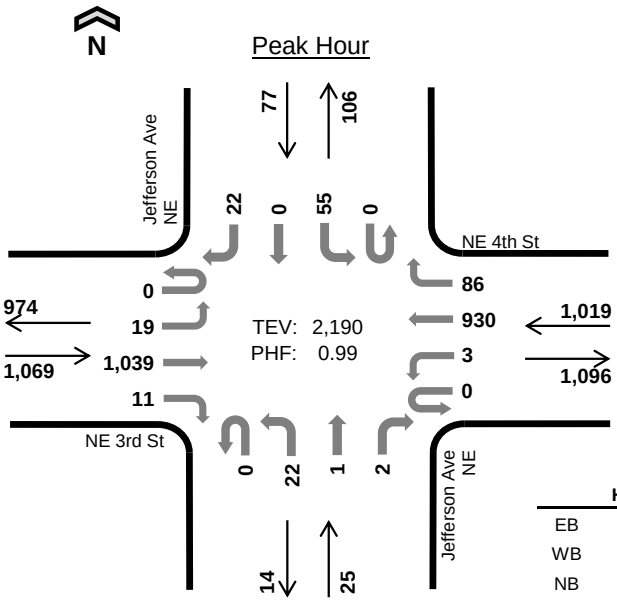

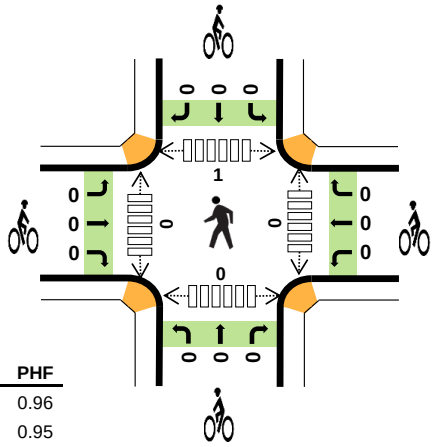

	HV %:	PHF
EB	1.4%	0.96
WB	1.7%	0.95
NB	0.0%	0.48
SB	0.0%	0.74
TOTAL	1.5%	0.99

Two-Hour Count Summaries

Interval Start	NE 3rd St Eastbound UT	LT	TH	RT	NE 4th St Westbound UT	LT	TH	RT	Jefferson Ave NE Northbound UT	LT	TH	RT	Jefferson Ave NE Southbound UT	LT	TH	RT	15-min Total	Rolling One Hour
4:00 PM	0	4	254	6	0	0	220	14	0	11	1	7	0	12	0	10	539	0
4:15 PM	0	3	259	3	0	3	216	18	0	5	0	4	0	8	1	8	528	0
4:30 PM	0	5	244	5	0	6	231	15	0	3	0	2	0	11	0	6	528	0
4:45 PM	0	5	236	3	0	1	237	23	0	5	1	6	0	8	0	7	532	2,127
5:00 PM	**0**	**4**	**272**	**1**	**0**	**0**	**231**	**17**	**0**	**2**	**0**	**0**	**0**	**11**	**0**	**8**	**546**	2,134
5:15 PM	**0**	**4**	**255**	**8**	**0**	**1**	**220**	**21**	**0**	**11**	**1**	**1**	**0**	**15**	**0**	**4**	**541**	2,147
5:30 PM	**0**	**4**	**245**	**2**	**0**	**1**	**246**	**22**	**0**	**8**	**0**	**1**	**0**	**18**	**0**	**8**	**555**	2,174
5:45 PM	**0**	**7**	**267**	**0**	**0**	**1**	**233**	**26**	**0**	**1**	**0**	**0**	**0**	**11**	**0**	**2**	**548**	**2,190**
Count Total	0	36	2,032	28	0	13	1,834	156	0	46	3	21	0	94	1	53	4,317	0
Peak Hour All	**0**	**19**	**1,039**	**11**	**0**	**3**	**930**	**86**	**0**	**22**	**1**	**2**	**0**	**55**	**0**	**22**	**2,190**	**0**
Peak Hour HV	**0**	**0**	**15**	**0**	**0**	**0**	**16**	**1**	**0**	**0**	**0**	**0**	**0**	**0**	**0**	**0**	**32**	**0**
Peak Hour HV%	**-**	**0%**	**1%**	**0%**	**-**	**0%**	**2%**	**1%**	**-**	**0%**	**0%**	**0%**	**-**	**0%**	**-**	**0%**	**1%**	**0**

Note: Two-hour count summary volumes include heavy vehicles but exclude bicycles in overall count.

Interval Start	Heavy Vehicle Totals EB	WB	NB	SB	Total	Bicycles EB	WB	NB	SB	Total	Pedestrians (Crossing Leg) East	West	North	South	Total
4:00 PM	5	4	2	2	*13*	0	0	0	0	*0*	0	0	0	0	*0*
4:15 PM	2	3	1	1	*7*	0	0	0	0	*0*	0	0	0	0	*0*
4:30 PM	2	5	0	0	*7*	0	0	0	0	*0*	0	1	0	0	*1*
4:45 PM	2	3	0	0	*5*	0	0	0	0	*0*	0	0	0	0	*0*
5:00 PM	**5**	**6**	**0**	**0**	***11***	**0**	**0**	**0**	**0**	***0***	**0**	**0**	**1**	**0**	*1*
5:15 PM	**3**	**3**	**0**	**0**	***6***	**0**	**0**	**0**	**0**	***0***	**0**	**0**	**0**	**0**	*0*
5:30 PM	**4**	**3**	**0**	**0**	***7***	**0**	**0**	**0**	**0**	***0***	**0**	**0**	**0**	**0**	*0*
5:45 PM	**3**	**5**	**0**	**0**	***8***	**0**	**0**	**0**	**0**	***0***	**0**	**0**	**0**	**0**	***0***
Count Total	26	32	3	3	*64*	0	0	0	0	*0*	0	1	1	0	*2*
Peak Hour	**15**	**17**	**0**	**0**	***32***	**0**	**0**	**0**	**0**	***0***	**0**	**0**	**1**	**0**	***1***

Two-Hour Count Summaries - Heavy Vehicles

Interval Start	NE 3rd St				NE 4th St				Jefferson Ave NE				Jefferson Ave NE				15-min Total	Rolling One Hour
	Eastbound				Westbound				Northbound				Southbound					
	UT	LT	TH	RT	UT	LT	TH	RT	UT	LT	TH	RT	UT	LT	TH	RT		
4:00 PM	0	0	5	0	0	0	4	0	0	1	0	1	0	0	0	2	13	0
4:15 PM	0	0	1	1	0	0	3	0	0	1	0	0	0	0	0	1	7	0
4:30 PM	0	0	2	0	0	0	5	0	0	0	0	0	0	0	0	0	7	0
4:45 PM	0	0	2	0	0	0	3	0	0	0	0	0	0	0	0	0	5	32
5:00 PM	**0**	**0**	**5**	**0**	**0**	**0**	**6**	**0**	**0**	**0**	**0**	**0**	**0**	**0**	**0**	**0**	**11**	30
5:15 PM	**0**	**0**	**3**	**0**	**0**	**0**	**3**	**0**	**0**	**0**	**0**	**0**	**0**	**0**	**0**	**0**	**6**	29
5:30 PM	**0**	**0**	**4**	**0**	**0**	**0**	**3**	**0**	**0**	**0**	**0**	**0**	**0**	**0**	**0**	**0**	**7**	29
5:45 PM	**0**	**0**	**3**	**0**	**0**	**0**	**4**	**1**	**0**	**0**	**0**	**0**	**0**	**0**	**0**	**0**	**8**	**32**
Count Total	0	0	25	1	0	0	31	1	0	2	0	1	0	0	0	3	64	0
Peak Hour	**0**	**0**	**15**	**0**	**0**	**0**	**16**	**1**	**0**	**0**	**0**	**0**	**0**	**0**	**0**	**0**	**32**	**0**

Two-Hour Count Summaries - Bikes

Interval Start	NE 3rd St			NE 4th St			Jefferson Ave NE			Jefferson Ave NE			15-min Total	Rolling One Hour
	Eastbound			Westbound			Northbound			Southbound				
	LT	TH	RT	LT	TH	RT	LT	TH	RT	LT	TH	RT		
4:00 PM	0	0	0	0	0	0	0	0	0	0	0	0	0	0
4:15 PM	0	0	0	0	0	0	0	0	0	0	0	0	0	0
4:30 PM	0	0	0	0	0	0	0	0	0	0	0	0	0	0
4:45 PM	0	0	0	0	0	0	0	0	0	0	0	0	0	0
5:00 PM	**0**	**0**	**0**	**0**	**0**	**0**	**0**	**0**	**0**	**0**	**0**	**0**	**0**	0
5:15 PM	**0**	**0**	**0**	**0**	**0**	**0**	**0**	**0**	**0**	**0**	**0**	**0**	**0**	0
5:30 PM	**0**	**0**	**0**	**0**	**0**	**0**	**0**	**0**	**0**	**0**	**0**	**0**	**0**	0
5:45 PM	**0**	**0**	**0**	**0**	**0**	**0**	**0**	**0**	**0**	**0**	**0**	**0**	**0**	**0**
Count Total	0	0	0	0	0	0	0	0	0	0	0	0	0	0
Peak Hour	**0**	**0**	**0**	**0**	**0**	**0**	**0**	**0**	**0**	**0**	**0**	**0**	**0**	**0**

Note: U-Turn volumes for bikes are included in Left-Turn, if any.

Appendix D. Detailed Trip Generation

Opening Year - CHRLF Trip Generation

Options 1 and 2

Daily Trip Forecasts

Time Period	Existing				Opening Year *Alternative 1*			Opening Year *Alternative 2,3, No Action*		
	Average Daily Transactions[1]	*Employees*	*BEW, Vendors, Contractors*	*Total Trips*	% Increase	Daily Trips	Net New Trips	% Increase	Daily Trips	Net New Trips
Weekday										
KC Haul Trucks	126	-	-	*252*	7.95%	272	0	7.95%	272	20
Commercial Haul	14	-	-	*28*	7.95%	30	0	7.95%	30	2
Self Haul	5	-	-	*10*	7.95%	10	0	7.95%	10	0
Employees/Visitors[2]	-	*193*	*68*	*522*	9.69%	572	0	9.69%	572	50
Operating Trips	-	-	-	-	-	42	42	-	0	0
Contruction Trips[3]	-	-	-	-	-	-	0	-	-	0
Total	**145**	**193**	**68**	**812**		**926**	**42**		**884**	**72**
Existing Weekday Traffic Counts				***800***						
Saturday										
KC Haul Trucks	71	-	-	*142*	7.95%	154	0	7.95%	154	12
Commercial Haul	0	-	-	*0*	7.95%	0	0	7.95%	0	0
Self Haul	0	-	-	*0*	7.95%	0	0	7.95%	0	0
Employees	-	*36*	*13*	*98*	13.9%	112	0	13.9%	112	14
Operating Trips	-	-	-	-	-	42	42	-	0	0
Contruction Trips	-	-	-	-	-	-	0	-	-	0
Total	**71**	**36**	**13**	**240**		**308**	**42**		**266**	**26**
Existing Saturday Traffic Counts				***312***						
Sunday										
KC Haul Trucks	54	-	-	*108*	7.95%	116	0	7.95%	116	8
Commercial Haul	0	-	-	*0*	7.95%	0	0	7.95%	0	0
Self Haul	0	-	-	*0*	7.95%	0	0	7.95%	0	0
Employees	-	*36*	*13*	*98*	13.9%	112	0	13.9%	112	14
Operating Trips	-	-	-	-	-	42	42	-	0	0
Contruction Trips	-	-	-	-	-	-	0	-	-	0
Total	**54**	**36**	**13**	**206**		**270**	**42**		**228**	**22**
Existing Sunday Traffic Counts				***204***						
Weekly Total	**270**	***265***		***4,506***		**5,208**	**294**		**4,914**	**408**
Weekly Existing Traffic Counts				***4,366***						

1. Daily Transactions based on 2017-2019 scale data for the Cedar Hills site.

2. Employee/Visitor Trips based on data provided by KC.

3. Construction Trips do not occur at the same time as the operations haul trips. The construction trips were assumed for the analysis as they are greater. Construction trips are estimated to be limited to 4 month durations during the summer.

4. KC Haul Trucks, Commercial, and Self Haul increase percentages based on forecasts provided by King County. Staffing/Visitor percentage increases provided by King County.

5. Assumes one holiday on a weekday and two on a weekend for all but construction trips. Construction trips are assumed to be June-September.

Opening Year - CHRLF Trip Generation
Options 1 and 2

Opening Year - Weekday NET NEW Trips by Time of Day (No Action relative to Existing)

	KC Haul Trucks		Commercial Haul		Self Haul		Employees, BEW, Vendors &		Operational		
Hour	**%**	**Trips**	**%**	**Trips**	**%**	**Trips**	**%**	**Trips**	**%**	**Trips**	**Total Trips**
5:00	0%	0	0%	0	0%	0	16%	8	0%	0	8
6:00	8%	2	13%	0	1%	0	7%	4	0%	0	6
7:00	7%	1	8%	0	4%	0	6%	3	0%	0	4
8:00	10%	2	6%	0	14%	0	3%	1	13%	0	3
9:00	10%	2	11%	0	13%	0	5%	2	13%	0	4
10:00	11%	2	13%	0	16%	0	5%	3	13%	0	5
11:00	10%	2	18%	1	14%	0	5%	3	13%	0	6
12:00	8%	2	16%	1	14%	0	6%	3	13%	0	6
13:00	10%	2	8%	0	13%	0	7%	3	13%	0	5
14:00	9%	2	5%	0	10%	0	9%	5	13%	0	7
15:00	8%	2	2%	0	1%	0	9%	4	13%	0	6
16:00	4%	1	1%	0	0%	0	14%	7	0%	0	8
17:00	2%	0	0%	0	0%	0	4%	2	0%	0	2
18:00	2%	0	0%	0	0%	0	3%	1	0%	0	1
19:00	1%	0	0%	0	0%	0	1%	1	0%	0	1
20:00	2%	0	0%	0	0%	0	0%	0	0%	0	0
Weekday Daily Trips	**100%**	**20**	**100%**	**2**	**100%**	**0**	**100%**	**50**	**100%**	**0**	**72**

Note: Time of day percentages for commercial, and self-haul based on scale data at Cedar Hills 2017-2019. Construction Trips assumed to occur 12 hours a day and were distributed evenly throughout the time period. Time of day for employees/Visitors as well HC Haul Trucks are based on existing traffic counts with consideration for vehicle classifications.

AM Peak Hour	**3**
Midday Peak Hour	**6**
PM Peak Hour	**8**

Opening Year - Weekday NET NEW Trips by Time of Day (Alt 1 relative to No Action)

	KC Haul Trucks		Commercial Haul		Self Haul		Employees, BEW, Vendors &		Operational		
Hour	**%**	**Trips**	**%**	**Trips**	**%**	**Trips**	**%**	**Trips**	**%**	**Trips**	**Total Trips**
5:00	0%	0	0%	0	0%	0	16%	0	0%	0	0
6:00	8%	0	13%	0	1%	0	7%	0	0%	0	0
7:00	7%	0	8%	0	4%	0	6%	0	0%	0	0
8:00	10%	0	6%	0	14%	0	3%	0	13%	5	5
9:00	10%	0	11%	0	13%	0	5%	0	13%	5	5
10:00	11%	0	13%	0	16%	0	5%	0	13%	5	5
11:00	10%	0	18%	0	14%	0	5%	0	13%	5	5
12:00	8%	0	16%	0	14%	0	6%	0	13%	5	5
13:00	10%	0	8%	0	13%	0	7%	0	13%	5	5
14:00	9%	0	5%	0	10%	0	9%	0	13%	5	5
15:00	8%	0	2%	0	1%	0	9%	0	13%	5	5
16:00	4%	0	1%	0	0%	0	14%	0	0%	0	0
17:00	2%	0	0%	0	0%	0	4%	0	0%	0	0
18:00	2%	0	0%	0	0%	0	3%	0	0%	0	0
19:00	1%	0	0%	0	0%	0	1%	0	0%	0	0
20:00	2%	0	0%	0	0%	0	0%	0	0%	0	0
Weekday Daily Trips	**100%**	**0**	**100%**	**0**	**100%**	**0**	**100%**	**0**	**100%**	**40**	**40**

Note: Time of day percentages for commercial, and self-haul based on scale data at Cedar Hills 2017-2019. Construction Trips assumed to occur 12 hours a day and were distributed evenly throughout the time period. Time of day for employees/Visitors as well HC Haul Trucks are based on existing traffic counts with consideration for vehicle classifications.

AM Peak Hour	**5**
Midday Peak Hour	**5**
PM Peak Hour	**0**

Design Year - CHRLF Trip Generation

Options 1 and 2

Daily Trip Forecasts

	Design Year			Future DY	
	Alternative 3			*Alternative 1, 2, NA*	
Time Period	**% Increase**	**Daily Trips**	**Net New Trips**	**% Increase**	**Daily Trips**
Weekday					
KC Haul Trucks	39.35%	352	352	-	-
Commercial Haul	39.35%	40	40	-	-
Self Haul	39.35%	14	14	-	-
Employees/Visitors[2]	9.69%	572	232	-34.80%	340
Operating Trips	-	50	50	-	
Contruction Trips[3]	-	-	0	-	-
Total		**1,028**	**688**		**340**
Saturday					
KC Haul Trucks	39.35%	198	198	-	-
Commercial Haul	39.35%	0	0	-	-
Self Haul	39.35%	0	0	-	-
Employees	13.9%	112	34	-19.44%	78
Operating Trips	-	50	50	-	
Contruction Trips	-	-	0	-	-
Total		**360**	**282**		**78**
Sunday					
KC Haul Trucks	39.35%	150	150	-	-
Commercial Haul	39.35%	0	0	-	-
Self Haul	39.35%	0	0	-	-
Employees	13.9%	112	34	-19.44%	78
Operating Trips	-	50	50	-	
Contruction Trips	-	-	0	-	-
Total		**312**	**234**		**78**
Weekly Total		**5,812**	**3,956**		**1,856**

1. Daily Transactions based on 2017-2019 scale data for the Cedar Hills site.

2. Employee/Visitor Trips based on data provided by KC.

3. Construction Trips do not occur at the same time as the operations haul trips. The construction trips were assumed for the analysis as they are greater. Construction trips are estimated to be limited to 4 month durations during the summer.

4. KC Haul Trucks, Commercial, and Self Haul increase percentages based on forecasts provided by King County. Staffing/Visitor percentage increases provided by King County.

5. Assumes one holiday on a weekday and two on a weekend for all but construction trips. Construction trips are assumed to be June-September.

Design Year - CHRLF Trip Generation
Options 1 and 2

Design Year - Weekday NET NEW Trips by Time of Day (No Action relative to Existing)

	KC Haul Trucks		Commercial Haul		Self Haul		Employees, BEW,		Operational		
Hour	%	Trips	%	Trips	%	Trips	%	Trips	%	Trips	Total Trips
5:00	0%	0	0%	0	0%	0	16%	-28	0%	0	-28
6:00	8%	-19	13%	-4	1%	0	7%	-13	0%	0	-36
7:00	7%	-18	8%	-2	4%	0	6%	-11	0%	0	-31
8:00	10%	-24	6%	-2	14%	-1	3%	-5	13%	0	-32
9:00	10%	-25	11%	-3	13%	-1	5%	-9	13%	0	-38
10:00	11%	-28	13%	-4	16%	-2	5%	-9	13%	0	-43
11:00	10%	-24	18%	-5	14%	-1	5%	-10	13%	0	-40
12:00	8%	-20	16%	-5	14%	-1	6%	-11	13%	0	-37
13:00	10%	-24	8%	-2	13%	-1	7%	-12	13%	0	-39
14:00	9%	-22	5%	-1	10%	-1	9%	-17	13%	0	-41
15:00	8%	-21	2%	-1	1%	0	9%	-16	13%	0	-38
16:00	4%	-10	1%	0	0%	0	14%	-25	0%	0	-35
17:00	2%	-4	0%	0	0%	0	4%	-8	0%	0	-12
18:00	2%	-6	0%	0	0%	0	3%	-5	0%	0	-11
19:00	1%	-2	0%	0	0%	0	1%	-2	0%	0	-4
20:00	2%	-4	0%	0	0%	0	0%	0	0%	0	-4
Weekday Daily Trips	**100%**	**-251**	**100%**	**-29**	**100%**	**-8**	**100%**	**-181**	**100%**	**0**	**-469**
										AM Peak Hour	**-32**
										Midday Peak Hour	**-40**
										PM Peak Hour	**-35**

Note: Time of day percentages for commercial, and self-haul based on scale data at Cedar Hills 2017-2019. Construction Trips assumed to occur 12 hours a day and were distributed evenly throughout the time period. Time of day for employees/Visitors as well HC Haul Trucks are based on existing traffic counts with consideration for vehicle classifications.

Design Year - Weekday Trips by Time of Day (Alt 1 relative to No Action)

	KC Haul Trucks		Commercial Haul		Self Haul		Employees, BEW,		Operational		
Hour	%	Trips	%	Trips	%	Trips	%	Trips	%	Trips	Total Trips
5:00	0%	0	0%	0	0%	0	16%	36	0%	0	36
6:00	8%	27	13%	5	1%	0	7%	17	0%	0	49
7:00	7%	26	8%	3	4%	1	6%	14	0%	0	44
8:00	10%	34	6%	2	14%	2	3%	7	13%	6	51
9:00	10%	35	11%	4	13%	2	5%	11	13%	6	58
10:00	11%	39	13%	5	16%	2	5%	12	13%	6	64
11:00	10%	34	18%	7	14%	2	5%	12	13%	6	61
12:00	8%	28	16%	6	14%	2	6%	14	13%	6	56
13:00	10%	34	8%	3	13%	2	7%	15	13%	6	60
14:00	9%	31	5%	2	10%	1	9%	22	13%	6	62
15:00	8%	30	2%	1	1%	0	9%	20	13%	6	57
16:00	4%	13	1%	0	0%	0	14%	32	0%	0	45
17:00	2%	5	0%	0	0%	0	4%	10	0%	0	15
18:00	2%	8	0%	0	0%	0	3%	7	0%	0	15
19:00	1%	3	0%	0	0%	0	1%	3	0%	0	6
20:00	2%	5	0%	0	0%	0	0%	0	0%	0	5
Weekday Daily Trips	**100%**	**352**	**100%**	**38**	**100%**	**14**	**100%**	**232**	**100%**	**48**	**684**
										AM Peak Hour	**51**
										Midday Peak Hour	**61**
										PM Peak Hour	**45**

Estimated Year CHRLF Reaches Capacity - CHRLF Trip Generation

Options 1 and 2

Daily Trip Forecasts

	Existing	Future 2028 *No Action*		Future 2037 *Alternative 1*		Future 2038 *Alternative 2*		Future 2046 *Alternative 3*	
Time Period	***Total Trips***	**% Increase[4]**	**Daily Trips**	**% Increase**	**Daily Trips**	**% Increase**	**Daily Trips**	**% Increase**	**Net New Trips**
Weekday									
KC Haul Trucks	*252*	9.91%	276	28.23%	324	30.38%	328	48.94%	376
Commercial Haul	*28*	9.91%	30	28.23%	36	30.38%	36	48.94%	42
Self Haul	*10*	9.91%	10	28.23%	12	30.38%	14	48.94%	14
Employees/Visitors[2]	*522*	9.69%	572	9.69%	572	9.69%	572	9.69%	572
Operating Trips	-	-	48	-	56	-	44	-	54
Contruction Trips[3]	-	-	-	-	-	-	-	-	-
Total	**812**		**936**		**1,000**		**994**		**1,058**
Existing Weekday Traffic Count	***800***								
Saturday									
KC Haul Trucks	*142*	9.91%	156	28.23%	182	30.38%	186	48.94%	212
Commercial Haul	*0*	9.91%	0	28.23%	0	30.38%	0	48.94%	0
Self Haul	*0*	9.91%	0	28.23%	0	30.38%	0	48.94%	0
Employees	*98*	13.9%	112	13.9%	112	13.9%	112	13.9%	112
Operating Trips	-	-	48	-	56	-	44	-	54
Contruction Trips	-	-	-	-	-	-	-	-	-
Total	**240**		**316**		**350**		**342**		**378**
Existing Saturday Traffic Count	***312***								
Sunday									
KC Haul Trucks	*108*	9.91%	118	28.23%	138	30.38%	140	48.94%	160
Commercial Haul	*0*	9.91%	0	28.23%	0	30.38%	0	48.94%	0
Self Haul	*0*	9.91%	0	28.23%	0	30.38%	0	48.94%	0
Employees	*98*	13.9%	112	13.9%	112	13.9%	112	13.9%	112
Operating Trips	-	-	48	-	56	-	44	-	54
Contruction Trips	-	-	-	-	-	-	-	-	-
Total	**206**		**278**		**306**		**296**		**326**
Existing Sunday Traffic Counts	***204***								
Weekly Total	***4,506***		**5,274**		**5,656**		**5,608**		**5,994**
Weekly Existing Traffic Counts	***4,366***								

1. Daily Transactions based on 2017-2019 scale data for the Cedar Hills site.

2. Employee/Visitor Trips based on data provided by KC.

3. Construction Trips do not occur at the same time as the operations haul trips. The construction trips were assumed for the analysis as they are greater. Construction trips are estimated to be limited to 4 month durations during the summer.

4. KC Haul Trucks, Commercial, and Self Haul increase percentages based on forecasts provided by King County. Staffing/Visitor percentage increases provided by King County.

5. Assumes one holiday on a weekday and two on a weekend for all but construction trips. Construction trips are assumed to be June-September.

Opening Year - CHRLF andRenton Trip Generation

2017/2018 Trucks that would shift: 50

Option 3

Cedar Hills Daily Trip Forecasts

Time Period	Existing				Opening Year *No Action*		Opening Year *Alternative 1*		Opening Year *Alternatives 2, 3*		
	Average Daily Transactions[1]	*Employees*	*BEW, Vendors, Contractors*	*Total Trips*	% Increase[4]	Daily Trips	% Increase	Daily Trips	% Increase	Daily Trips	Net New Trips
Weekday											
KC Haul Trucks	126	-	-	*252*	7.95%	272	7.95%	272	7.95%	272	0
Commercial Haul	14	-	-	*28*	7.95%	30	7.95%	30	7.95%	30	0
Self Haul	5	-	-	*10*	7.95%	10	7.95%	10	7.95%	10	0
Employees/Visitors[2]	-	*193*	*68*	*522*	9.69%	572	9.69%	198	9.69%	198	-374
Operating Trips	-	-	-	-	-	-	-	42	-	0	0
Contruction Trips[3]	-	-	-	-	-	-	-	-	-	-	0
Total	**145**	**193**	**68**	**812**		**884**		**552**		**510**	**-374**
Existing Weekday Traffic Counts				***800***							
Saturday											
KC Haul Trucks	71	-	-	*142*	7.95%	154	7.95%	154	7.95%	154	0
Commercial Haul	0	-	-	*0*	7.95%	0	7.95%	0	7.95%	0	0
Self Haul	0	-	-	*0*	7.95%	0	7.95%	0	7.95%	0	0
Employees	-	*36*	*13*	*98*	13.9%	112	13.9%	38	13.9%	38	-74
Operating Trips	-	-	-	-	-	-	-	42	-	-	0
Contruction Trips	-	-	-	-	-	-	-	-	-	-	0
Total	**71**	**36**	**13**	**240**		**266**		**234**		**192**	**-74**
Existing Saturday Traffic Counts				***312***							
Sunday											
KC Haul Trucks	54	-	-	*108*	7.95%	116	7.95%	116	7.95%	116	0
Commercial Haul	0	-	-	*0*	7.95%	0	7.95%	0	7.95%	0	0
Self Haul	0	-	-	*0*	7.95%	0	7.95%	0	7.95%	0	0
Employees	-	*36*	*13*	*98*	13.9%	112	13.9%	38	13.9%	38	-74
Operating Trips	-	-	-	-	-	-	-	42	-	-	0
Contruction Trips	-	-	-	-	-	-	-	-	-	-	0
Total	**54**	**36**	**13**	**206**		**228**		**196**		**154**	**-74**
Existing Sunday Traffic Counts				***204***							
Weekly Total	**270**	***265***		***4,506***		**4,914**		**3,190**		**2,896**	**-2,018**
Weekly Existing Traffic Counts				***4,366***							

Renton Daily Trip Forecasts

Time Period	Opening Year *Alternatives 1,2,3* Daily Trips
Weekday	
KC Haul Trucks	108
Commercial Haul	-
Self Haul	-
Employees/Visitors[2]	374
Operating Trips	-
Contruction Trips[3]	-
Total	**482**
Saturday	
KC Haul Trucks	108
Commercial Haul	-
Self Haul	-
Employees	73
Operating Trips	-
Contruction Trips	-
Total	**181**
Sunday	
KC Haul Trucks	108
Commercial Haul	-
Self Haul	-
Employees	73
Operating Trips	-
Contruction Trips	-
Total	**181**
Weekly Total	**2,773**

1. Daily Transactions based on 2017-2019 scale data for the Cedar Hills site.

2. Employee/Visitor Trips based on data provided by KC.

3. Construction Trips do not occur at the same time as the operations haul trips. The construction trips were assumed for the analysis as they are greater. Construction trips are estimated to be limited to 4 month durations during the summer.

4. KC Haul Trucks, Commercial, and Self Haul increase percentages based on forecasts provided by King County. Staffing/Visitor percentage increases provided by King County.

5. Assumes one holiday on a weekday and two on a weekend for all but construction trips. Construction trips are assumed to be June-September.

Opening Year - CHRLF andRenton Trip Generation
Option 3

Opening Year Weekday Trips by Time of Day - Cedar Hills

	KC Haul Trucks		Commercial Haul		Self Haul		Employees, BEW, Vendors &		Operational		
Hour	%	Trips	%	Trips	%	Trips	%	Trips	%	Trips	Total Trips
5:00	0%	0	0%	0	0%	0	16%	-58	0%	0	-58
6:00	1%	0	13%	0	1%	0	7%	-27	0%	0	-27
7:00	7%	0	8%	0	4%	0	6%	-22	0%	0	-22
8:00	10%	0	6%	0	14%	0	3%	-11	13%	5	-6
9:00	10%	0	11%	0	13%	0	5%	-19	13%	5	-14
10:00	11%	0	13%	0	16%	0	5%	-19	13%	5	-14
11:00	10%	0	18%	0	14%	0	5%	-20	13%	5	-15
12:00	8%	0	16%	0	14%	0	6%	-23	13%	5	-18
13:00	10%	0	8%	0	13%	0	7%	-24	13%	5	-19
14:00	9%	0	5%	0	10%	0	9%	-35	13%	5	-30
15:00	8%	0	2%	0	1%	0	9%	-32	13%	5	-27
16:00	4%	0	1%	0	0%	0	14%	-52	0%	0	-52
17:00	2%	0	0%	0	0%	0	4%	-16	0%	0	-16
18:00	5%	0	0%	0	0%	0	3%	-11	0%	0	-11
19:00	5%	0	0%	0	0%	0	1%	-5	0%	0	-5
20:00	2%	0	0%	0	0%	0	0%	0	0%	0	0
Weekday Daily Trips	**100%**	**0**	**100%**	**0**	**100%**	**0**	**100%**	**-374**	**100%**	**40**	**-334**
										AM Peak Hour	**-6**
										Midday Peak Hour	**-15**
										PM Peak Hour	**-52**

Note: Time of day percentages for commercial, and self-haul based on scale data at Cedar Hills 2017-2019. Construction Trips assumed to occur 12 hours a day and were distributed evenly throughout the time period. Time of day for employees/Visitors as well HC Haul Trucks are based on existing traffic counts with consideration for vehicle classifications.

Opening Year Weekday Trips by Time of Day - Renton

	KC Haul Trucks		Employees, BEW, Vendors &		
Hour	%	Trips	%	Trips	Total Trips
5:00		0	16%	58	58
6:00	50%	54	7%	27	81
7:00		0	6%	22	22
8:00		0	3%	11	11
9:00		0	5%	19	19
10:00		0	5%	19	19
11:00		0	5%	20	20
12:00		0	6%	23	23
13:00		0	7%	24	24
14:00		0	9%	35	35
15:00		0	9%	32	32
16:00		0	14%	52	52
17:00		0	4%	16	16
18:00	18%	19	3%	11	30
19:00	25%	27	1%	5	32
20:00	7%	8	0%	0	8
Weekday Daily Tr	**100%**	**108**	**100%**	**374**	**482**
				AM Peak Hour	**11**
				Midday Peak Hour	**20**
				PM Peak Hour	**52**

Design Year - CHRLF andRenton Trip Generation

Option 3

2017/2018 Trucks that would shift:

Cedar Hills Daily Trip Forecasts

	Design year			Future DY		Future DY	
	Alternative 3			*No Action*		*Alternative 1, 2*	
Time Period	**% Increase**	**Daily Trips**	**Net New Trips**	**% Increase**	**Daily Trips**	**% Increase**	**Daily Trips**
Weekday							
KC Haul Trucks	39.35%	352	352	-	-	-	-
Commercial Haul	39.35%	40	40	-	-	-	-
Self Haul	39.35%	14	14	-	-	-	-
Employees/Visitors[2]	9.69%	198	-142	-34.80%	340	-34.80%	92
Operating Trips	-	50	50	-		-	
Contruction Trips[3]	-	-	0	-	-	-	-
Total		**654**	**314**		**340**		**92**
Saturday							
KC Haul Trucks	39.35%	198	198	-	-	-	-
Commercial Haul	39.35%	0	0	-	-	-	-
Self Haul	39.35%	0	0	-	-	-	-
Employees	13.9%	38	-40	-19.44%	78	-19.44%	22
Operating Trips	-	50	50	-		-	
Contruction Trips	-	-	0	-	-	-	-
Total		**286**	**208**		**78**		**22**
Sunday							
KC Haul Trucks	39.35%	150	150	-	-	-	-
Commercial Haul	39.35%	0	0	-	-	-	-
Self Haul	39.35%	0	0	-	-	-	-
Employees	13.9%	38	-40	-19.44%	78	-19.44%	22
Operating Trips	-	50	50	-		-	
Contruction Trips	-	-	0	-	-	-	-
Total		**238**	**160**		**78**		**22**
Weekly Total		**3,794**	**1,938**		**1,856**		**504**

Renton Daily Trip Forecasts

	Future 2039	Future DY
	Alternative 3	*Alternative 1, 2*
Time Period	**Daily Trips**	**Daily Trips**
Weekday		
KC Haul Trucks	133	-
Commercial Haul	-	-
Self Haul	-	-
Employees/Visitors[2]	374	248
Operating Trips	-	-
Contruction Trips[3]	-	-
Total	**507**	**248**
Saturday		
KC Haul Trucks	133	-
Commercial Haul	-	-
Self Haul	-	-
Employees	74	56
Operating Trips	-	-
Contruction Trips	-	-
Total	**207**	**56**
Sunday		
KC Haul Trucks	133	-
Commercial Haul	-	-
Self Haul	-	-
Employees	74	56
Operating Trips	-	-
Contruction Trips	-	-
Total	**207**	**56**
Weekly Total	**2,949**	**1,352**

1. Daily Transactions based on 2017-2019 scale data for the Cedar Hills site.

2. Employee/Visitor Trips based on data provided by KC.

3. Construction Trips do not occur at the same time as the operations haul trips. The construction trips were assumed for the analysis as they are greater. Construction trips are estimated to be limited to 4 month durations during the summer.

4. KC Haul Trucks, Commercial, and Self Haul increase percentages based on forecasts provided by King County. Staffing/Visitor percentage increases provided by King County.

5. Assumes one holiday on a weekday and two on a weekend for all but construction trips. Construction trips are assumed to be June-September.

Design Year - CHRLF andRenton Trip Generation
Option 3

Design Year Weekday Trips by Time of Day - Cedar Hills

Hour	KC Haul Trucks		Commercial Haul		Self Haul		Employees, BEW, Vendors		Operational		Total Trips
	%	Trips	%	Trips	%	Trips	%	Trips	%	Trips	
5:00	0%	0	0%	0	0%	0	16%	-22	0%	0	-22
6:00	1%	2	13%	5	1%	0	7%	-10	0%	0	-3
7:00	7%	26	8%	3	4%	1	6%	-8	0%	0	22
8:00	10%	34	6%	2	14%	2	3%	-4	13%	6	40
9:00	10%	35	11%	4	13%	2	5%	-7	13%	6	40
10:00	11%	39	13%	5	16%	2	5%	-7	13%	6	45
11:00	10%	34	18%	7	14%	2	5%	-8	13%	6	41
12:00	8%	28	16%	6	14%	2	6%	-9	13%	6	33
13:00	10%	34	8%	3	13%	2	7%	-9	13%	6	36
14:00	9%	31	5%	2	10%	1	9%	-13	13%	6	27
15:00	8%	30	2%	1	1%	0	9%	-12	13%	6	25
16:00	4%	13	1%	0	0%	0	14%	-20	0%	0	-7
17:00	2%	5	0%	0	0%	0	4%	-6	0%	0	-1
18:00	5%	19	0%	0	0%	0	3%	-4	0%	0	15
19:00	5%	17	0%	0	0%	0	1%	-2	0%	0	15
20:00	2%	5	0%	0	0%	0	0%	0	0%	0	5
Weekday Daily Trips	**100%**	**352**	**100%**	**38**	**100%**	**14**	**100%**	**-141**	**100%**	**48**	**311**
										AM Peak Hour	**40**
										Midday Peak Hour	**41**
										PM Peak Hour	**-7**

Note: Time of day percentages for commercial, and self-haul based on scale data at Cedar Hills 2017-2019. Construction Trips assumed to occur 12 hours a day and were distributed evenly throughout the time period. Time of day for employees/Visitors as well HC Haul Trucks are based on existing traffic counts with consideration for vehicle classifications.

Design Year Weekday Trips by Time of Day - Renton

Hour	KC Haul Trucks		Employees, BEW, Vendors &		Total
	%	Trips	%	Trips	
5:00		0	16%	58	58
6:00	50%	70	7%	27	97
7:00		0	6%	22	22
8:00		0	3%	11	11
9:00		0	5%	19	19
10:00		0	5%	19	19
11:00		0	5%	20	20
12:00		0	6%	23	23
13:00		0	7%	24	24
14:00		0	9%	35	35
15:00		0	9%	32	32
16:00		0	14%	52	52
17:00		0	4%	16	16
18:00	18%	25	3%	11	36
19:00	25%	35	1%	5	40
20:00	7%	10	0%	0	10
Weekday Daily Trips	**100%**	**140**	**100%**	**374**	**514**
				AM Peak Hour	**11**
				Midday Peak Hour	**20**
				PM Peak Hour	**52**

Estimated Year CHRLF Reaches Capacity - CHRLF and Renton Trip Generation

2017/2018 Trucks that would shift: 50

Cedar Hills Daily Trip Forecasts

	Existing	Future 2037 *Alternative 1*		Future 2038 *Alternative 2*		Future 2046 *Alternative 3*		
Time Period	***Total Trips***	**% Increase**	**Daily Trips**	**% Increase**	**Daily Trips**	**% Increase**	**Daily Trips**	**Net New Trips**
Weekday								
KC Haul Trucks	*252*	28.23%	324	30.38%	328	48.94%	376	376
Commercial Haul	*28*	28.23%	36	30.38%	36	48.94%	42	42
Self Haul	*10*	28.23%	12	30.38%	14	48.94%	14	14
Employees/Visitors[2]	*522*	9.69%	198	9.69%	198	9.69%	198	198
Operating Trips	-	-	56	-	44	-	54	54
Contruction Trips[3]	-	-	-	-	-	-	-	0
Total	**812**		**626**		**620**		**684**	**684**
Saturday								
KC Haul Trucks	*142*	28.23%	182	30.38%	186	48.94%	212	212
Commercial Haul	*0*	28.23%	0	30.38%	0	48.94%	0	0
Self Haul	*0*	28.23%	0	30.38%	0	48.94%	0	0
Employees	*98*	13.9%	38	13.9%	38	13.9%	38	38
Operating Trips	-	-	56	-	44	-	54	54
Contruction Trips	-	-	-	-	-	-	-	0
Total	**240**		**276**		**268**		**304**	**304**
Sunday								
KC Haul Trucks	*108*	28.23%	138	30.38%	140	48.94%	160	160
Commercial Haul	*0*	28.23%	0	30.38%	0	48.94%	0	0
Self Haul	*0*	28.23%	0	30.38%	0	48.94%	0	0
Employees	*98*	13.9%	38	13.9%	38	13.9%	38	38
Operating Trips	-	-	56	-	44	-	54	54
Contruction Trips	-	-	-	-	-	-	-	0
Total	**206**		**232**		**222**		**252**	**252**
Weekly Total	***4,506***		**3,638**		**3,590**		**3,976**	**3,976**

Renton Daily Trip Forecasts

	Future 2037 *Alternative 1*	Future 2038 *Alternative 2*	Future 2046 *Alternative 3*
Time Period	**Daily Trips**	**Daily Trips**	**Daily Trips**
Weekday			
KC Haul Trucks	128	130	149
Commercial Haul	-	-	-
Self Haul	-	-	-
Employees/Visitors[2]	374	374	374
Operating Trips	-	-	-
Contruction Trips[3]	-	-	-
Total	**502**	**504**	**523**
Saturday			
KC Haul Trucks	128	130	149
Commercial Haul	-	-	-
Self Haul	-	-	-
Employees	73	73	73
Operating Trips	-	-	-
Contruction Trips	-	-	-
Total	**201**	**203**	**222**
Sunday			
KC Haul Trucks	128	130	149
Commercial Haul	-	-	-
Self Haul	-	-	-
Employees	73	73	73
Operating Trips	-	-	-
Contruction Trips	-	-	-
Total	**201**	**203**	**222**
Weekly Total	**2,913**	**2,927**	**3,060**

1. Daily Transactions based on 2017-2019 scale data for the Cedar Hills site.

2. Employee/Visitor Trips based on data provided by KC.

3. Construction Trips do not occur at the same time as the operations haul trips. The construction trips were assumed for the analysis as they are greater. Construction trips are estimated to be limited to 4 month durations during the summer.

4. KC Haul Trucks, Commercial, and Self Haul increase percentages based on forecasts provided by King County. Staffing/Visitor percentage increases provided by King County.

5. Assumes one holiday on a weekday and two on a weekend for all but construction trips. Construction trips are assumed to be June-September.

Opening Year - CHRLF Trip Generation - CONSTRUCTION

Options 1 and 2

Daily Trip Forecasts

	Existing				pening Ye	Opening Year			Opening Year			Opening Year		
					No Action	*Alternative 1*			*Alternative 2*			*Alternative 3*		
Time Period	**Average Daily Transactions[1]**	***Employees***	***BEW, Vendors, Contractors***	***Total Trips***	**% Increase[4]**	**% Increase**	**Daily Trips**	**Net New Trips**	**% Increase**	**Daily Trips**	**Net New Trips**	**% Increase**	**Daily Trips**	**Net New Trips**
Weekday														
KC Haul Trucks	126	-	-	*252*	7.95%	7.95%	272	0	7.95%	272	0	7.95%	272	0
Commercial Haul	14	-	-	*28*	7.95%	7.95%	30	0	7.95%	30	0	7.95%	30	0
Self Haul	5	-	-	*10*	7.95%	7.95%	10	0	7.95%	10	0	7.95%	10	0
Employees/Visitors[2]	-	*193*	*68*	*522*	9.69%	9.69%	572	0	9.69%	572	0	9.69%	572	0
Operating Trips	-	-	-	-	-	-	42	42	-	-	0	-	-	0
Contruction Trips[3]	-	-	-	-	-	-	959	959	-	993	993	-	836	836
Total	**145**	**193**	**68**	**812**			**1,885**	**1,001**		**1,877**	**993**		**1,720**	**836**
Existing Weekday Traffic Counts				***800***										
Saturday														
KC Haul Trucks	71	-	-	*142*	7.95%	7.95%	154	0	7.95%	154	0	7.95%	154	0
Commercial Haul	0	-	-	*0*	7.95%	7.95%	0	0	7.95%	0	0	7.95%	0	0
Self Haul	0	-	-	*0*	7.95%	7.95%	0	0	7.95%	0	0	7.95%	0	0
Employees	-	*36*	*13*	*98*	13.9%	13.9%	112	0	13.9%	112	0	13.9%	112	0
Operating Trips	-	-	-	-	-	-	42	42	-	-	0	-	-	0
Contruction Trips	-	-	-	-	-	-	959	959	-	993	993	-	836	836
Total	**71**	**36**	**13**	**240**			**1,267**	**1,001**		**1,259**	**993**		**1,102**	**836**
Existing Saturday Traffic Counts				***312***										
Sunday														
KC Haul Trucks	54	-	-	*108*	7.95%	7.95%	116	0	7.95%	116	0	7.95%	116	0
Commercial Haul	0	-	-	*0*	7.95%	7.95%	0	0	7.95%	0	0	7.95%	0	0
Self Haul	0	-	-	*0*	7.95%	7.95%	0	0	7.95%	0	0	7.95%	0	0
Employees	-	*36*	*13*	*98*	13.9%	13.9%	112	0	13.9%	112	0	13.9%	112	0
Operating Trips	-	-	-	-	-	-	42	42	-	-	0	-	-	0
Contruction Trips	-	-	-	-	-	-	959	959	-	993	993	-	836	836
Total	**54**	**36**	**13**	**206**			**1,229**	**1,001**		**1,221**	**993**		**1,064**	**836**
Existing Sunday Traffic Counts				***204***										
Weekly Total	**270**	***265***		***4,506***			**11,918**	**7,004**		**11,864**	**6,950**		**10,766**	**5,852**
Weekly Existing Traffic Counts				***4,366***										

1. Daily Transactions based on 2017-2019 scale data for the Cedar Hills site.

2. Employee/Visitor Trips based on data provided by KC.

3. Construction Trips do not occur at the same time as the operations haul trips. The construction trips were assumed for the analysis as they are greater. Construction trips are estimated to be limited to 4 month durations during the summer.

4. KC Haul Trucks, Commercial, and Self Haul increase percentages based on forecasts provided by King County. Staffing/Visitor percentage increases provided by King County.

5. Assumes one holiday on a weekday and two on a weekend for all but construction trips. Construction trips are assumed to be June-September.

Opening Year - CHRLF Trip Generation - CONSTRUCTION
Options 1 and 2

Year of Opening - Weekday NET NEW Trips by Time of Day - CONSTRUCTION

Assumes alt 1 base with Alt 2 construction (highest)

	KC Haul Trucks		Commercial Haul		Self Haul		Employees, BEW,		Operational		Construction		
Hour	**%**	**Trips**	**%**	**Trips**	**%**	**Trips**	**%**	**Trips**	**%**	**Trips**	**%**	**Trips**	**Total Trips**
5:00	0%	0	0%	0	0%	0	16%	0	0%	0	0%	0	0
6:00	8%	0	13%	0	1%	0	7%	0	0%	0	0%	0	0
7:00	7%	0	8%	0	4%	0	6%	0	0%	0	8%	83	83
8:00	10%	0	6%	0	14%	0	3%	0	13%	5	8%	83	88
9:00	10%	0	11%	0	13%	0	5%	0	13%	5	8%	83	88
10:00	11%	0	13%	0	16%	0	5%	0	13%	5	8%	83	88
11:00	10%	0	18%	0	14%	0	5%	0	13%	5	8%	83	88
12:00	8%	0	16%	0	14%	0	6%	0	13%	5	8%	83	88
13:00	10%	0	8%	0	13%	0	7%	0	13%	5	8%	83	88
14:00	9%	0	5%	0	10%	0	9%	0	13%	5	8%	83	88
15:00	8%	0	2%	0	1%	0	9%	0	13%	5	8%	83	88
16:00	4%	0	1%	0	0%	0	14%	0	0%	0	8%	83	83
17:00	2%	0	0%	0	0%	0	4%	0	0%	0	8%	83	83
18:00	2%	0	0%	0	0%	0	3%	0	0%	0	8%	83	83
19:00	1%	0	0%	0	0%	0	1%	0	0%	0	0%	0	0
20:00	2%	0	0%	0	0%	0	0%	0	0%	0	0%	0	0
Weekday Daily Trips	**100%**	**0**	**100%**	**0**	**100%**	**0**	**100%**	**0**	**100%**	**40**	**100%**	**996**	**1,036**

AM Peak Hour (7-8 a.m.)	**88**
Midday Peak Hour (2-3 p.m.)	**88**
PM Peak Hour (4-5 p.m.)	**83**

Note: Time of day percentages for commercial, and self-haul based on scale data at Cedar Hills 2017-2019. Construction Trips assumed to occur 12 hours a day and were distributed evenly throughout the time period. Time of day for employees/Visitors as well HC Haul Trucks are based on existing traffic counts with consideration for vehicle classifications.

Design Year - CHRLF Trip Generation - CONSTRUCTION

Options 1 and 2

Daily Trip Forecasts

	Future 2039			Design Year			Future DY	
	Alternative 3			*Alternative 3*			*Alternative 1, 2, NA*	
Time Period	**% Increase[4]**	**Daily Trips**	**Net New Trips**	**% Increase**	**Daily Trips**	**Net New Trips**	**% Increase**	**Daily Trips**
Weekday								
KC Haul Trucks	32.57%	334	334	39.35%	352	352	-	-
Commercial Haul	32.57%	38	38	39.35%	40	40	-	-
Self Haul	32.57%	14	14	39.35%	14	14	-	-
Employees/Visitors[2]	9.69%	572	232	9.69%	572	232	-34.80%	340
Operating Trips	-	48	48	-	50	50	-	
Contruction Trips[3]	-	500	500	-	229	229	-	-
Total		**1,506**	**1,166**		**1,257**	**917**		**340**
Saturday								
KC Haul Trucks	32.57%	188	188	39.35%	198	198	-	-
Commercial Haul	32.57%	0	0	39.35%	0	0	-	-
Self Haul	32.57%	0	0	39.35%	0	0	-	-
Employees	13.9%	112	34	13.9%	112	34	-19.44%	78
Operating Trips	-	48	48	-	50	50	-	
Contruction Trips	-	500	500	-	229	229	-	-
Total		**848**	**770**		**589**	**511**		**78**
Sunday								
KC Haul Trucks	32.57%	144	144	39.35%	150	150	-	-
Commercial Haul	32.57%	0	0	39.35%	0	0	-	-
Self Haul	32.57%	0	0	39.35%	0	0	-	-
Employees	13.9%	112	34	13.9%	112	34	-19.44%	78
Operating Trips	-	48	48	-	50	50	-	
Contruction Trips	-	500	500	-	229	229	-	-
Total		**804**	**726**		**541**	**463**		**78**
Weekly Total		**9,180**	**7,324**		**7,414**	**5,558**		**1,856**

1. Daily Transactions based on 2017-2019 scale data for the Cedar Hills site.

2. Employee/Visitor Trips based on data provided by KC.

3. Construction Trips do not occur at the same time as the operations haul trips. The construction trips were assumed for the analysis as they are greater. Construction trips are estimated to be limited to 4 month durations during the summer.

4. KC Haul Trucks, Commercial, and Self Haul increase percentages based on forecasts provided by King County. Staffing/Visitor percentage increases provided by King County.

5. Assumes one holiday on a weekday and two on a weekend for all but construction trips. Construction trips are assumed to be June-September.

Design Year - CHRLF Trip Generation - CONSTRUCTION
Options 1 and 2

Design Year - Weekday NET NEW Trips by Time of Day - CONSTRUCTION

Assumes 2039 construction trip (highest)

	KC Haul Trucks		Commercial Haul		Self Haul		Employees, BEW,		Operational		Construction		
Hour	**%**	**Trips**	**%**	**Trips**	**%**	**Trips**	**%**	**Trips**	**%**	**Trips**	**%**	**Trips**	**Total Trips**
5:00	0%	0	0%	0	0%	0	16%	36	0%	0	0%	0	36
6:00	8%	27	13%	5	1%	0	7%	17	0%	0	0%	0	49
7:00	7%	26	8%	3	4%	1	6%	14	0%	0	8%	42	86
8:00	10%	34	6%	2	14%	2	3%	7	13%	6	8%	42	93
9:00	10%	35	11%	4	13%	2	5%	11	13%	6	8%	42	100
10:00	11%	39	13%	5	16%	2	5%	12	13%	6	8%	42	106
11:00	10%	34	18%	7	14%	2	5%	12	13%	6	8%	42	103
12:00	8%	28	16%	6	14%	2	6%	14	13%	6	8%	42	98
13:00	10%	34	8%	3	13%	2	7%	15	13%	6	8%	42	102
14:00	9%	31	5%	2	10%	1	9%	22	13%	6	8%	42	104
15:00	8%	30	2%	1	1%	0	9%	20	13%	6	8%	42	99
16:00	4%	13	1%	0	0%	0	14%	32	0%	0	8%	42	87
17:00	2%	5	0%	0	0%	0	4%	10	0%	0	8%	42	57
18:00	2%	8	0%	0	0%	0	3%	7	0%	0	8%	42	57
19:00	1%	3	0%	0	0%	0	1%	3	0%	0	0%	0	6
20:00	2%	5	0%	0	0%	0	0%	0	0%	0	0%	0	5
Weekday Daily Trips	**100%**	**352**	**100%**	**38**	**100%**	**14**	**100%**	**232**	**100%**	**48**	**100%**	**504**	**1,188**

AM Peak Hour (7-8 a.m.)	**93**
Midday Peak Hour (2-3 p.m.)	**106**
PM Peak Hour (4-5 p.m.)	**87**

Note: Time of day percentages for commercial, and self-haul based on scale data at Cedar Hills 2017-2019. Construction Trips assumed to occur 12 hours a day and were distributed evenly throughout the time period. Time of day for employees/Visitors as well HC Haul Trucks are based on existing traffic counts with consideration for vehicle classifications.

Opening Year - CHRLF Trip Generation (5-Day Operations)

Options 1 and 2

Daily Trip Forecasts

Time Period	Existing				Opening Year *Alternative 1*			Opening Year *Alternative 2,3, No Action*		
	Average Daily Transactions[1]	*Employees*	*BEW, Vendors, Contractors*	*Total Trips*	% Increase	Daily Trips	Net New Trips	% Increase	Daily Trips	Net New Trips
Weekday (Peak)										
KC Haul Trucks	126	-	-	*252*	7.95%	342	0	7.95%	342	90
Commercial Haul	14	-	-	*28*	7.95%	30	0	7.95%	30	2
Self Haul	5	-	-	*10*	7.95%	10	0	7.95%	10	0
Employees/Visitors[2]	-	*193*	*68*	*522*	9.69%	572	0	9.69%	572	50
Operating Trips	-	-	-	-	-	42	42	-	0	0
Contruction Trips[3]	-	-	-	-	-	-	0	-	-	0
Total	**145**	**193**	**68**	**812**		**996**	**42**		**954**	**142**
Existing Weekday Traffic Counts				***800***						
Saturday										
KC Haul Trucks	71	-	-	*142*		0	0		0	-142
Commercial Haul	0	-	-	*0*		0	0		0	0
Self Haul	0	-	-	*0*		0	0		0	0
Employees	-	*36*	*13*	*98*	-19.44%	78	0	-19.44%	78	-20
Operating Trips	-	-	-	-	-	42	42	-	0	0
Contruction Trips	-	-	-	-	-	-	0	-	-	0
Total	**71**	**36**	**13**	**240**		**120**	**42**		**78**	**-162**
Existing Saturday Traffic Counts				***312***						
Sunday										
KC Haul Trucks	54	-	-	*108*		0	0		0	-108
Commercial Haul	0	-	-	*0*		0	0		0	0
Self Haul	0	-	-	*0*		0	0		0	0
Employees	-	*36*	*13*	*98*	-19.44%	78	0	-19.44%	78	-20
Operating Trips	-	-	-	-	-	42	42	-	0	0
Contruction Trips	-	-	-	-	-	-	0	-	-	0
Total	**54**	**36**	**13**	**206**		**120**	**42**		**78**	**-128**
Existing Sunday Traffic Counts				***204***						
Weekly Total KC Haul Trucks				***1,510***						
Weekly Total	**270**	***265***		***4,506***						
Weekly Existing Traffic Counts				***4,366***						

1. Daily Transactions based on 2017-2019 scale data for the Cedar Hills site.

2. Employee/Visitor Trips based on data provided by KC.

3. Construction Trips do not occur at the same time as the operations haul trips. The construction trips were assumed for the analysis as they are greater. Construction trips are estimated to be limited to 4 month durations during the summer.

4. KC Haul Trucks, Commercial, and Self Haul increase percentages based on forecasts provided by King County. Staffing/Visitor percentage increases provided by King County.

5. Assumes one holiday on a weekday and two on a weekend for all but construction trips. Construction trips are assumed to be June-September.

Future Trips

Shifting Existing Mon-Sun Haul Operations to Mon-Fri

Future Daily Distribution of Trips:

Mon	**21%**
Tues	**21%**
Wed	20%
Thur	19%
Fri	19%

Opening Year - CHRLF Trip Generation (5-Day Operations)

Options 1 and 2

Opening Year - Weekday NET NEW Trips by Time of Day (No Action relative to Existing)

	KC Haul Trucks		Commercial Haul		Self Haul		BEW, Vendors		Operational		
Hour	%	Trips	%	Trips	%	Trips	%	Trips	%	Trips	Total Trips
5:00	0%	0	0%	0	0%	0	16%	8	0%	0	8
6:00	8%	7	13%	0	1%	0	7%	4	0%	0	11
7:00	7%	7	8%	0	4%	0	6%	3	0%	0	10
8:00	10%	9	6%	0	14%	0	3%	1	13%	0	10
9:00	10%	9	11%	0	13%	0	5%	2	13%	0	11
10:00	11%	10	13%	0	16%	0	5%	3	13%	0	13
11:00	10%	9	18%	1	14%	0	5%	3	13%	0	13
12:00	8%	7	16%	1	14%	0	6%	3	13%	0	11
13:00	10%	9	8%	0	13%	0	7%	3	13%	0	12
14:00	9%	8	5%	0	10%	0	9%	5	13%	0	13
15:00	8%	8	2%	0	1%	0	9%	4	13%	0	12
16:00	4%	3	1%	0	0%	0	14%	7	0%	0	10
17:00	2%	1	0%	0	0%	0	4%	2	0%	0	3
18:00	2%	2	0%	0	0%	0	3%	1	0%	0	3
19:00	1%	1	0%	0	0%	0	1%	1	0%	0	2
20:00	2%	1	0%	0	0%	0	0%	0	0%	0	1
Weekday Daily Trips	**100%**	**91**	**100%**	**2**	**100%**	**0**	**100%**	**50**	**100%**	**0**	**143**

Note: Time of day percentages for commercial, and self-haul based on scale data at Cedar Hills 2017-2019. Construction Trips assumed to occur 12 hours a day and were distributed evenly throughout the time period. Time of day for employees/Visitors as well HC Haul Trucks are based on existing traffic counts with consideration for vehicle classifications.

AM Peak Hour	**10**
Midday Peak Hour	**13**
PM Peak Hour	**10**

Opening Year - Weekday NET NEW Trips by Time of Day (Alt 1 relative to No Action)

	KC Haul Trucks		Commercial Haul		Self Haul		Employees, BEW, Vendors &		Operational		
Hour	%	Trips	%	Trips	%	Trips	%	Trips	%	Trips	Total Trips
5:00	0%	0	0%	0	0%	0	16%	0	0%	0	0
6:00	8%	0	13%	0	1%	0	7%	0	0%	0	0
7:00	7%	0	8%	0	4%	0	6%	0	0%	0	0
8:00	10%	0	6%	0	14%	0	3%	0	13%	5	5
9:00	10%	0	11%	0	13%	0	5%	0	13%	5	5
10:00	11%	0	13%	0	16%	0	5%	0	13%	5	5
11:00	10%	0	18%	0	14%	0	5%	0	13%	5	5
12:00	8%	0	16%	0	14%	0	6%	0	13%	5	5
13:00	10%	0	8%	0	13%	0	7%	0	13%	5	5
14:00	9%	0	5%	0	10%	0	9%	0	13%	5	5
15:00	8%	0	2%	0	1%	0	9%	0	13%	5	5
16:00	4%	0	1%	0	0%	0	14%	0	0%	0	0
17:00	2%	0	0%	0	0%	0	4%	0	0%	0	0
18:00	2%	0	0%	0	0%	0	3%	0	0%	0	0
19:00	1%	0	0%	0	0%	0	1%	0	0%	0	0
20:00	2%	0	0%	0	0%	0	0%	0	0%	0	0
Weekday Daily Trips	**100%**	**0**	**100%**	**0**	**100%**	**0**	**100%**	**0**	**100%**	**40**	**40**

Note: Time of day percentages for commercial, and self-haul based on scale data at Cedar Hills 2017-2019. Construction Trips assumed to occur 12 hours a day and were distributed evenly throughout the time period. Time of day for employees/Visitors as well HC Haul Trucks are based on existing traffic counts with consideration for vehicle classifications.

AM Peak Hour	**5**
Midday Peak Hour	**5**
PM Peak Hour	**0**

Design Year - CHRLF Trip Generation (5-Day Operations)

Options 1 and 2

Daily Trip Forecasts

	Design Year			Future DY	
	Alternative 3			*Alternative 1, 2, NA*	
Time Period	**% Increase**	**Daily Trips**	**Net New Trips**	**% Increase**	**Daily Trips**
Weekday (Peak)					
KC Haul Trucks	39.35%	442	442	-	-
Commercial Haul	39.35%	40	40	-	-
Self Haul	39.35%	14	14	-	-
Employees/Visitors[2]	9.69%	572	232	-34.80%	340
Operating Trips	-	50	50	-	
Contruction Trips[3]	-	-	0	-	-
Total		**1,118**	**778**		**340**
Saturday					
KC Haul Trucks		0	0	-	-
Commercial Haul		0	0	-	-
Self Haul		0	0	-	-
Employees	-19.44%	78	0	-19.44%	78
Operating Trips	-	50	50	-	
Contruction Trips	-	-	0	-	-
Total		**128**	**50**		**78**
Sunday					
KC Haul Trucks		0	0	-	-
Commercial Haul		0	0	-	-
Self Haul		0	0	-	-
Employees	-19.44%	78	0	-19.44%	78
Operating Trips	-	50	50	-	
Contruction Trips	-	-	0	-	-
Total		**128**	**50**		**78**

1. Daily Transactions based on 2017-2019 scale data for the Cedar Hills site.

2. Employee/Visitor Trips based on data provided by KC.

3. Construction Trips do not occur at the same time as the operations haul trips. The construction trips were assumed for the analysis as they are greater. Construction trips are estimated to be limited to 4 month durations during the summer.

4. KC Haul Trucks, Commercial, and Self Haul increase percentages based on forecasts provided by King County. Staffing/Visitor percentage increases provided by King County.

5. Assumes one holiday on a weekday and two on a weekend for all but construction trips. Construction trips are assumed to be

Future Trips

Shifting Existing Mon-Sun Haul Operations to Mon-Fri

Future Daily Distribution of Trips:

Mon	**21%**
Tues	**21%**
Wed	20%
Thur	19%
Fri	19%

Design Year - CHRLF Trip Generation (5-Day Operations)

Options 1 and 2

Design Year - Weekday NET NEW Trips by Time of Day (No Action relative to Existing)

Hour	KC Haul Trucks		Commercial Haul		Self Haul		Employees, BEW, Vendors &		Operational		Total Trips
	%	Trips	%	Trips	%	Trips	%	Trips	%	Trips	
5:00	0%	0	0%	0	0%	0	16%	-28	0%	0	-28
6:00	8%	-19	13%	-4	1%	0	7%	-13	0%	0	-36
7:00	7%	-18	8%	-2	4%	0	6%	-11	0%	0	-31
8:00	10%	-24	6%	-2	14%	-1	3%	-5	13%	0	-32
9:00	10%	-25	11%	-3	13%	-1	5%	-9	13%	0	-38
10:00	11%	-28	13%	-4	16%	-2	5%	-9	13%	0	-43
11:00	10%	-24	18%	-5	14%	-1	5%	-10	13%	0	-40
12:00	8%	-20	16%	-5	14%	-1	6%	-11	13%	0	-37
13:00	10%	-24	8%	-2	13%	-1	7%	-12	13%	0	-39
14:00	9%	-22	5%	-1	10%	-1	9%	-17	13%	0	-41
15:00	8%	-21	2%	-1	1%	0	9%	-16	13%	0	-38
16:00	4%	-10	1%	0	0%	0	14%	-25	0%	0	-35
17:00	2%	-4	0%	0	0%	0	4%	-8	0%	0	-12
18:00	2%	-6	0%	0	0%	0	3%	-5	0%	0	-11
19:00	1%	-2	0%	0	0%	0	1%	-2	0%	0	-4
20:00	2%	-4	0%	0	0%	0	0%	0	0%	0	-4
Weekday Daily Trips	**100%**	**-251**	**100%**	**-29**	**100%**	**-8**	**100%**	**-181**	**100%**	**0**	**-469**

AM Peak Hour	**-32**
Midday Peak Hour	**-40**
PM Peak Hour	**-35**

Note: Time of day percentages for commercial, and self-haul based on scale data at Cedar Hills 2017-2019. Construction Trips assumed to occur 12 hours a day and were distributed evenly throughout the time period. Time of day for employees/Visitors as well HC Haul Trucks are based on existing traffic counts with consideration for vehicle classifications.

Design Year - Weekday NET NEW Trips by Time of Day (Alt 3 relative to No Action)

Hour	KC Haul Trucks		Commercial Haul		Self Haul		Employees, BEW, Vendors &		Operational		Total Trips
	%	Trips	%	Trips	%	Trips	%	Trips	%	Trips	
5:00	0%	0	0%	0	0%	0	16%	36	0%	0	36
6:00	8%	34	13%	5	1%	0	7%	17	0%	0	56
7:00	7%	32	8%	3	4%	1	6%	14	0%	0	50
8:00	10%	42	6%	2	14%	2	3%	7	13%	6	59
9:00	10%	44	11%	4	13%	2	5%	11	13%	6	67
10:00	11%	49	13%	5	16%	2	5%	12	13%	6	74
11:00	10%	43	18%	8	14%	2	5%	12	13%	6	71
12:00	8%	36	16%	7	14%	2	6%	14	13%	7	66
13:00	10%	42	8%	3	13%	2	7%	15	13%	7	69
14:00	9%	39	5%	2	10%	1	9%	22	13%	6	70
15:00	8%	37	2%	1	1%	0	9%	20	13%	6	64
16:00	4%	17	1%	0	0%	0	14%	32	0%	0	49
17:00	2%	7	0%	0	0%	0	4%	10	0%	0	17
18:00	2%	10	0%	0	0%	0	3%	7	0%	0	17
19:00	1%	3	0%	0	0%	0	1%	3	0%	0	6
20:00	2%	7	0%	0	0%	0	0%	0	0%	0	7
Weekday Daily Trips	**100%**	**442**	**100%**	**40**	**100%**	**14**	**100%**	**232**	**100%**	**50**	**778**

AM Peak Hour	**59**
Midday Peak Hour	**71**
PM Peak Hour	**49**

Estimated Year CHRLF Reaches Capacity - CHRLF Trip Generation (5-Day Operations)

Options 1 and 2

Daily Trip Forecasts

	Existing	Future 2028 *No Action*		Future 2037 *Alternative 1*			Future 2038 *Alternative 2*			Future 2046 *Alternative 3*		
Time Period	***Total Trips***	**% Increase[4]**	**Daily Trips**	**% Increase**	**Daily Trips**	**Net New Trips**	**% Increase**	**Daily Trips**	**Net New Trips**	**% Increase**	**Daily Trips**	**Net New Trips**
Weekday (Peak)												
KC Haul Trucks	*252*	9.91%	348	28.23%	406	406	30.38%	414	414	48.94%	472	472
Commercial Haul	*28*	9.91%	30	28.23%	36	36	30.38%	36	36	48.94%	42	42
Self Haul	*10*	9.91%	10	28.23%	12	12	30.38%	14	14	48.94%	14	14
Employees/Visitors[2]	*522*	9.69%	572	9.69%	572	572	9.69%	572	572	9.69%	572	572
Operating Trips	-	-	48	-	56	56	-	44	44	-	54	54
Contruction Trips[3]	-	-	-	-	-	-	-	-	-	-	-	-
Total	**812**		**1,008**		**1,082**	**1,082**		**1,080**	**1,080**		**1,154**	**1,154**
Existing Weekday Traffic Counts	***800***											
Saturday												
KC Haul Trucks	*142*		0		0	0		0	0		0	0
Commercial Haul	*0*		0		0	0		0	0		0	0
Self Haul	*0*		0		0	0		0	0		0	0
Employees	*98*	-19.44%	78	-19.44%	78	78	-19.44%	78	78	-19.44%	78	78
Operating Trips	-	-	48	-	56	56	-	44	44	-	54	54
Contruction Trips	-	-	-	-	-	-	-	-	-	-	-	-
Total	**240**		**126**		**134**	**134**		**122**	**122**		**132**	**132**
Existing Saturday Traffic Counts	***312***											
Sunday												
KC Haul Trucks	*108*		0		0	0		0	0		0	0
Commercial Haul	*0*		0		0	0		0	0		0	0
Self Haul	*0*		0		0	0		0	0		0	0
Employees	*98*	-19.44%	78	-19.44%	78	78	-19.44%	78	78	-19.44%	78	78
Operating Trips	-	-	48	-	56	56	-	44	44	-	54	54
Contruction Trips	-	-	-	-	-	-	-	-	-	-	-	-
Total	**206**		**126**		**134**	**134**		**122**	**122**		**132**	**132**
Existing Sunday Traffic Counts	***204***											
Weekly Total KC Haul Trucks	***1,510***											

1. Daily Transactions based on 2017-2019 scale data for the Cedar Hills site.

2. Employee/Visitor Trips based on data provided by KC.

3. Construction Trips do not occur at the same time as the operations haul trips. The construction trips were assumed for the analysis as they are greater. Construction trips are estimated to be limited to 4 month durations during the summer.

4. KC Haul Trucks, Commercial, and Self Haul increase percentages based on forecasts provided by King County. Staffing/Visitor percentage increases provided by King County.

5. Assumes one holiday on a weekday and two on a weekend for all but construction trips. Construction trips are assumed to be June-September.

Appendix E. Level of Service Worksheets

Intersection	
Int Delay, s/veh	1.5

Movement	EBL	EBT	WBT	WBR	SBL	SBR
Lane Configurations						
Traffic Vol, veh/h	35	355	55	10	10	35
Future Vol, veh/h	35	355	55	10	10	35
Conflicting Peds, #/hr	0	0	0	0	0	0
Sign Control	Free	Free	Free	Free	Stop	Stop
RT Channelized	-	None	-	None	-	None
Storage Length	450	-	-	-	0	-
Veh in Median Storage, #	-	0	0	-	0	-
Grade, %	-	0	0	-	0	-
Peak Hour Factor	88	88	88	88	88	88
Heavy Vehicles, %	2	2	2	2	49	49
Mvmt Flow	40	403	63	11	11	40

Major/Minor	Major1		Major2		Minor2	
Conflicting Flow All	74	0	-	0	552	69
Stage 1	-	-	-	-	69	-
Stage 2	-	-	-	-	483	-
Critical Hdwy	4.12	-	-	-	6.89	6.69
Critical Hdwy Stg 1	-	-	-	-	5.89	-
Critical Hdwy Stg 2	-	-	-	-	5.89	-
Follow-up Hdwy	2.218	-	-	-	3.941	3.741
Pot Cap-1 Maneuver	1526	-	-	-	423	877
Stage 1	-	-	-	-	847	-
Stage 2	-	-	-	-	534	-
Platoon blocked, %		-	-	-		
Mov Cap-1 Maneuver	1526	-	-	-	412	877
Mov Cap-2 Maneuver	-	-	-	-	412	-
Stage 1	-	-	-	-	825	-
Stage 2	-	-	-	-	534	-

Approach	EB	WB	SB
HCM Control Delay, s	0.7	0	10.5
HCM LOS			B

Minor Lane/Major Mvmt	EBL	EBT	WBT	WBR	SBLn1
Capacity (veh/h)	1526	-	-	-	701
HCM Lane V/C Ratio	0.026	-	-	-	0.073
HCM Control Delay (s)	7.4	-	-	-	10.5
HCM Lane LOS	A	-	-	-	B
HCM 95th %tile Q(veh)	0.1	-	-	-	0.2

Intersection	
Int Delay, s/veh	5.8

Movement	EBL	EBT	EBR	WBL	WBT	WBR	NBL	NBT	NBR	SBL	SBT	SBR
Lane Configurations												
Traffic Vol, veh/h	0	205	0	5	90	0	75	5	175	5	0	0
Future Vol, veh/h	0	205	0	5	90	0	75	5	175	5	0	0
Conflicting Peds, #/hr	0	0	0	0	0	0	0	0	0	0	0	0
Sign Control	Free	Free	Free	Free	Free	Free	Stop	Stop	Stop	Stop	Stop	Stop
RT Channelized	-	-	None	-	-	None	-	-	None	-	-	None
Storage Length	-	-	-	-	-	-	-	-	-	-	-	-
Veh in Median Storage, #	-	0	-	-	0	-	-	0	-	-	0	-
Grade, %	-	0	-	-	0	-	-	0	-	-	0	-
Peak Hour Factor	87	87	87	87	87	87	87	87	87	87	87	87
Heavy Vehicles, %	4	4	4	30	30	30	1	1	1	0	0	0
Mvmt Flow	0	236	0	6	103	0	86	6	201	6	0	0

Major/Minor	Major1			Major2			Minor1			Minor2		
Conflicting Flow All	103	0	0	236	0	0	351	351	118	236	351	103
Stage 1	-	-	-	-	-	-	236	236	-	115	115	-
Stage 2	-	-	-	-	-	-	115	115	-	121	236	-
Critical Hdwy	4.16	-	-	4.55	-	-	7.315	6.515	6.915	7.3	6.5	6.2
Critical Hdwy Stg 1	-	-	-	-	-	-	6.515	5.515	-	6.1	5.5	-
Critical Hdwy Stg 2	-	-	-	-	-	-	6.115	5.515	-	6.5	5.5	-
Follow-up Hdwy	2.238	-	-	2.485	-	-	3.5095	4.0095	3.3095	3.5	4	3.3
Pot Cap-1 Maneuver	1474	-	-	1165	-	-	594	575	915	713	577	957
Stage 1	-	-	-	-	-	-	749	711	-	895	804	-
Stage 2	-	-	-	-	-	-	892	802	-	876	713	-
Platoon blocked, %		-	-		-	-						
Mov Cap-1 Maneuver	1474	-	-	1165	-	-	592	572	915	550	574	957
Mov Cap-2 Maneuver	-	-	-	-	-	-	592	572	-	550	574	-
Stage 1	-	-	-	-	-	-	749	711	-	895	800	-
Stage 2	-	-	-	-	-	-	888	798	-	678	713	-

Approach	EB	WB	NB	SB
HCM Control Delay, s	0	0.4	12.4	11.6
HCM LOS			B	B

Minor Lane/Major Mvmt	NBLn1	EBL	EBT	EBR	WBL	WBT	WBR	SBLn1
Capacity (veh/h)	781	1474	-	-	1165	-	-	550
HCM Lane V/C Ratio	0.375	-	-	-	0.005	-	-	0.01
HCM Control Delay (s)	12.4	0	-	-	8.1	0	-	11.6
HCM Lane LOS	B	A	-	-	A	A	-	B
HCM 95th %tile Q(veh)	1.8	0	-	-	0	-	-	0

Movement	WBL	WBR	NBT	NBR	SBL	SBT
Lane Configurations						
Traffic Volume (veh/h)	25	135	880	175	45	280
Future Volume (veh/h)	25	135	880	175	45	280
Initial Q (Qb), veh	0	0	0	0	0	0
Ped-Bike Adj(A_pbT)	1.00	1.00		1.00	1.00	
Parking Bus, Adj	1.00	1.00	1.00	1.00	1.00	1.00
Work Zone On Approach	No		No			No
Adj Sat Flow, veh/h/ln	1618	1618	1856	1856	1826	1826
Adj Flow Rate, veh/h	27	145	946	188	48	301
Peak Hour Factor	0.93	0.93	0.93	0.93	0.93	0.93
Percent Heavy Veh, %	19	19	3	3	5	5
Cap, veh/h	30	163	1010	201	168	1365
Arrive On Green	0.14	0.14	0.67	0.67	0.03	0.75
Sat Flow, veh/h	218	1171	1503	299	1739	1826
Grp Volume(v), veh/h	173	0	0	1134	48	301
Grp Sat Flow(s),veh/h/ln	1397	0	0	1802	1739	1826
Q Serve(g_s), s	15.5	0.0	0.0	70.8	1.0	6.3
Cycle Q Clear(g_c), s	15.5	0.0	0.0	70.8	1.0	6.3
Prop In Lane	0.16	0.84		0.17	1.00	
Lane Grp Cap(c), veh/h	195	0	0	1211	168	1365
V/C Ratio(X)	0.89	0.00	0.00	0.94	0.29	0.22
Avail Cap(c_a), veh/h	267	0	0	1297	185	1455
HCM Platoon Ratio	1.00	1.00	1.00	1.00	1.00	1.00
Upstream Filter(I)	1.00	0.00	0.00	1.00	1.00	1.00
Uniform Delay (d), s/veh	53.7	0.0	0.0	18.4	28.3	4.9
Incr Delay (d2), s/veh	22.8	0.0	0.0	12.6	1.3	0.1
Initial Q Delay(d3),s/veh	0.0	0.0	0.0	0.0	0.0	0.0
%ile BackOfQ(50%),veh/ln	6.7	0.0	0.0	30.8	1.0	2.2
Unsig. Movement Delay, s/veh						
LnGrp Delay(d),s/veh	76.6	0.0	0.0	31.0	29.6	5.0
LnGrp LOS	E	A	A	C	C	A
Approach Vol, veh/h	173		1134			349
Approach Delay, s/veh	76.6		31.0			8.4
Approach LOS	E		C			A

Timer - Assigned Phs	1	2				6	8
Phs Duration (G+Y+Rc), s	9.6	93.5				103.1	24.0
Change Period (Y+Rc), s	5.5	* 8.1				* 8.1	6.3
Max Green Setting (Gmax), s	5.3	* 92				* 1E2	24.3
Max Q Clear Time (g_c+I1), s	3.0	72.8				8.3	17.5
Green Ext Time (p_c), s	0.0	12.6				3.0	0.3

Intersection Summary	
HCM 6th Ctrl Delay	31.0
HCM 6th LOS	C

Notes

User approved pedestrian interval to be less than phase max green.

User approved volume balancing among the lanes for turning movement.

* HCM 6th computational engine requires equal clearance times for the phases crossing the barrier.

Movement	EBL	EBR	NBL	NBT	SBT	SBR
Lane Configurations						
Traffic Volume (vph)	70	50	75	1240	150	45
Future Volume (vph)	70	50	75	1240	150	45
Ideal Flow (vphpl)	1900	1900	1900	1900	1900	1900
Total Lost time (s)	5.0	5.0	6.5	6.5	6.5	6.5
Lane Util. Factor	1.00	1.00	1.00	1.00	1.00	1.00
Frt	1.00	0.85	1.00	1.00	1.00	0.85
Flt Protected	0.95	1.00	0.95	1.00	1.00	1.00
Satd. Flow (prot)	1641	1468	1752	1845	1743	1482
Flt Permitted	0.95	1.00	0.57	1.00	1.00	1.00
Satd. Flow (perm)	1641	1468	1049	1845	1743	1482
Peak-hour factor, PHF	0.92	0.92	0.92	0.92	0.92	0.92
Adj. Flow (vph)	76	54	82	1348	163	49
RTOR Reduction (vph)	0	49	0	0	0	20
Lane Group Flow (vph)	76	5	82	1348	163	29
Heavy Vehicles (%)	10%	10%	3%	3%	9%	9%
Turn Type	custom	custom	pm+pt	NA	NA	Perm
Protected Phases	3	3	5	2	6	
Permitted Phases	4	4	2			6
Actuated Green, G (s)	6.5	6.5	54.4	54.4	43.4	43.4
Effective Green, g (s)	6.5	6.5	54.4	54.4	43.4	43.4
Actuated g/C Ratio	0.09	0.09	0.75	0.75	0.60	0.60
Clearance Time (s)	5.0	5.0	6.5	6.5	6.5	6.5
Vehicle Extension (s)	2.0	2.0	2.0	5.0	5.0	5.0
Lane Grp Cap (vph)	147	131	831	1386	1044	888
v/s Ratio Prot	c0.05	0.00	0.01	c0.73	0.09	
v/s Ratio Perm			0.07			0.02
v/c Ratio	0.52	0.04	0.10	0.97	0.16	0.03
Uniform Delay, d1	31.5	30.1	2.7	8.3	6.4	5.9
Progression Factor	1.00	1.00	1.00	1.00	1.00	1.00
Incremental Delay, d2	1.3	0.0	0.0	18.1	0.1	0.0
Delay (s)	32.7	30.1	2.7	26.4	6.6	6.0
Level of Service	C	C	A	C	A	A
Approach Delay (s)	31.7			25.1	6.4	
Approach LOS	C			C	A	

Intersection Summary			
HCM 2000 Control Delay	23.3	HCM 2000 Level of Service	C
HCM 2000 Volume to Capacity ratio	1.09		
Actuated Cycle Length (s)	72.4	Sum of lost time (s)	21.0
Intersection Capacity Utilization	79.0%	ICU Level of Service	D
Analysis Period (min)	15		
c Critical Lane Group			

Movement	EBL	EBR	NBL	NBT	SBT	SBR
Lane Configurations						
Traffic Volume (vph)	300	5	20	970	125	40
Future Volume (vph)	300	5	20	970	125	40
Ideal Flow (vphpl)	1900	1900	1900	1900	1900	1900
Total Lost time (s)	5.0	5.0	6.0	6.0	6.0	5.0
Lane Util. Factor	1.00	1.00	1.00	1.00	1.00	1.00
Frt	1.00	0.85	1.00	1.00	1.00	0.85
Flt Protected	0.95	1.00	0.95	1.00	1.00	1.00
Satd. Flow (prot)	1770	1583	1752	1845	1810	1538
Flt Permitted	0.95	1.00	0.64	1.00	1.00	1.00
Satd. Flow (perm)	1770	1583	1176	1845	1810	1538
Peak-hour factor, PHF	0.91	0.91	0.91	0.91	0.91	0.91
Adj. Flow (vph)	330	5	22	1066	137	44
RTOR Reduction (vph)	0	4	0	0	0	5
Lane Group Flow (vph)	330	1	22	1066	137	39
Heavy Vehicles (%)	2%	2%	3%	3%	5%	5%
Turn Type	custom	custom	pm+pt	NA	NA	pm+ov
Protected Phases	3	3	5	2	6	3
Permitted Phases	4	4	2			6
Actuated Green, G (s)	39.0	39.0	130.0	130.0	120.6	159.6
Effective Green, g (s)	39.0	39.0	130.0	130.0	120.6	159.6
Actuated g/C Ratio	0.22	0.22	0.72	0.72	0.67	0.89
Clearance Time (s)	5.0	5.0	6.0	6.0	6.0	5.0
Vehicle Extension (s)	2.0	2.0	2.0	2.0	2.0	2.0
Lane Grp Cap (vph)	383	342	860	1332	1212	1363
v/s Ratio Prot	c0.19	0.00	0.00	c0.58	0.08	0.01
v/s Ratio Perm			0.02			0.02
v/c Ratio	0.86	0.00	0.03	0.80	0.11	0.03
Uniform Delay, d1	67.9	55.3	7.1	16.5	10.6	1.2
Progression Factor	1.00	1.00	1.00	1.00	1.00	1.00
Incremental Delay, d2	17.2	0.0	0.0	5.1	0.2	0.0
Delay (s)	85.1	55.3	7.1	21.6	10.8	1.2
Level of Service	F	E	A	C	B	A
Approach Delay (s)	84.6			21.3	8.5	
Approach LOS	F			C	A	

Intersection Summary			
HCM 2000 Control Delay	33.1	HCM 2000 Level of Service	C
HCM 2000 Volume to Capacity ratio	0.86		
Actuated Cycle Length (s)	180.0	Sum of lost time (s)	20.0
Intersection Capacity Utilization	76.8%	ICU Level of Service	D
Analysis Period (min)	15		
c Critical Lane Group			

Intersection	
Int Delay, s/veh	0.7

Movement	EBL	EBT	EBR	WBL	WBT	WBR	NBL	NBT	NBR	SBL	SBT	SBR
Lane Configurations												
Traffic Vol, veh/h	0	0	0	15	0	10	10	905	0	0	45	85
Future Vol, veh/h	0	0	0	15	0	10	10	905	0	0	45	85
Conflicting Peds, #/hr	0	0	0	0	0	0	0	0	0	0	0	0
Sign Control	Stop	Stop	Stop	Stop	Stop	Stop	Free	Free	Free	Free	Free	Free
RT Channelized	-	-	None	-	-	None	-	-	None	-	-	None
Storage Length	-	-	-	-	-	500	175	-	-	-	-	375
Veh in Median Storage, #	-	1	-	-	0	-	-	0	-	-	0	-
Grade, %	-	0	-	-	0	-	-	0	-	-	0	-
Peak Hour Factor	83	83	83	83	83	83	83	83	83	83	83	83
Heavy Vehicles, %	0	0	0	19	19	19	3	3	3	4	4	4
Mvmt Flow	0	0	0	18	0	12	12	1090	0	0	54	102

Major/Minor	Minor1		Major1			Major2			
Conflicting Flow All	1219	1270	1090	156	0	-	-	-	0
Stage 1	1114	1114	-	-	-	-	-	-	-
Stage 2	105	156	-	-	-	-	-	-	-
Critical Hdwy	6.59	6.69	6.39	4.13	-	-	-	-	-
Critical Hdwy Stg 1	5.59	5.69	-	-	-	-	-	-	-
Critical Hdwy Stg 2	5.59	5.69	-	-	-	-	-	-	-
Follow-up Hdwy	3.671	4.171	3.471	2.227	-	-	-	-	-
Pot Cap-1 Maneuver	184	156	242	1418	-	0	0	-	-
Stage 1	291	264	-	-	-	0	0	-	-
Stage 2	879	737	-	-	-	0	0	-	-
Platoon blocked, %					-			-	-
Mov Cap-1 Maneuver	183	0	242	1418	-	-	-	-	-
Mov Cap-2 Maneuver	183	0	-	-	-	-	-	-	-
Stage 1	289	0	-	-	-	-	-	-	-
Stage 2	879	0	-	-	-	-	-	-	-

Approach	WB	NB	SB
HCM Control Delay, s	24.4	0.1	0
HCM LOS	C		

Minor Lane/Major Mvmt	NBL	NBT	WBLn1	WBLn2	SBT	SBR
Capacity (veh/h)	1418	-	183	242	-	-
HCM Lane V/C Ratio	0.008	-	0.099	0.05	-	-
HCM Control Delay (s)	7.6	-	26.8	20.7	-	-
HCM Lane LOS	A	-	D	C	-	-
HCM 95th %tile Q(veh)	0	-	0.3	0.2	-	-

Movement	EBL	EBR	NBL	NBT	SBT	SBR
Lane Configurations						
Traffic Volume (veh/h)	575	10	75	330	55	5
Future Volume (veh/h)	575	10	75	330	55	5
Initial Q (Qb), veh	0	0	0	0	0	0
Ped-Bike Adj(A_pbT)	1.00	1.00	1.00			1.00
Parking Bus, Adj	1.00	1.00	1.00	1.00	1.00	1.00
Work Zone On Approach	No			No	No	
Adj Sat Flow, veh/h/ln	1856	1856	1870	1870	1811	1811
Adj Flow Rate, veh/h	701	12	91	402	67	6
Peak Hour Factor	0.82	0.82	0.82	0.82	0.82	0.82
Percent Heavy Veh, %	3	3	2	2	6	6
Cap, veh/h	773	688	157	571	616	55
Arrive On Green	0.44	0.44	0.38	0.38	0.38	0.38
Sat Flow, veh/h	1767	1572	250	1518	1638	147
Grp Volume(v), veh/h	701	12	493	0	0	73
Grp Sat Flow(s),veh/h/ln	1767	1572	1768	0	0	1785
Q Serve(g_s), s	25.0	0.3	10.5	0.0	0.0	1.8
Cycle Q Clear(g_c), s	25.0	0.3	16.1	0.0	0.0	1.8
Prop In Lane	1.00	1.00	0.18			0.08
Lane Grp Cap(c), veh/h	773	688	728	0	0	671
V/C Ratio(X)	0.91	0.02	0.68	0.00	0.00	0.11
Avail Cap(c_a), veh/h	1272	1132	1583	0	0	889
HCM Platoon Ratio	1.00	1.00	1.00	1.00	1.00	1.00
Upstream Filter(I)	1.00	1.00	1.00	0.00	0.00	1.00
Uniform Delay (d), s/veh	17.7	10.8	18.1	0.0	0.0	13.7
Incr Delay (d2), s/veh	5.9	0.0	2.4	0.0	0.0	0.2
Initial Q Delay(d3),s/veh	0.0	0.0	0.0	0.0	0.0	0.0
%ile BackOfQ(50%),veh/ln	10.2	0.1	6.5	0.0	0.0	0.7
Unsig. Movement Delay, s/veh						
LnGrp Delay(d),s/veh	23.6	10.8	20.4	0.0	0.0	13.9
LnGrp LOS	C	B	C	A	A	B
Approach Vol, veh/h	713			493	73	
Approach Delay, s/veh	23.4			20.4	13.9	
Approach LOS	C			C	B	

Timer - Assigned Phs		2		4		6
Phs Duration (G+Y+Rc), s		31.8		35.9		31.8
Change Period (Y+Rc), s		6.3		6.3		6.3
Max Green Setting (Gmax), s		58.7		48.7		33.7
Max Q Clear Time (g_c+I1), s		18.1		27.0		3.8
Green Ext Time (p_c), s		7.3		2.6		0.7

Intersection Summary	
HCM 6th Ctrl Delay	21.7
HCM 6th LOS	C

Movement	EBL	EBT	EBR	WBL	WBT	WBR	NBL	NBT	NBR	SBL	SBT	SBR
Lane Configurations												
Traffic Volume (veh/h)	150	10	20	5	0	5	5	995	0	5	320	60
Future Volume (veh/h)	150	10	20	5	0	5	5	995	0	5	320	60
Initial Q (Qb), veh	0	0	0	0	0	0	0	0	0	0	0	0
Ped-Bike Adj(A_pbT)	1.00		0.98	1.00		1.00	1.00		1.00	1.00		1.00
Parking Bus, Adj	1.00	1.00	1.00	1.00	1.00	1.00	1.00	1.00	1.00	1.00	1.00	1.00
Work Zone On Approach		No			No			No			No	
Adj Sat Flow, veh/h/ln	1885	1885	1885	1693	1693	1693	1752	1752	1752	1648	1648	1648
Adj Flow Rate, veh/h	163	11	22	5	0	5	5	1082	0	5	348	65
Peak Hour Factor	0.92	0.92	0.92	0.92	0.92	0.92	0.92	0.92	0.92	0.92	0.92	0.92
Percent Heavy Veh, %	1	1	1	14	14	14	10	10	10	17	17	17
Cap, veh/h	218	11	23	276	0	264	586	1168	0	119	1099	931
Arrive On Green	0.14	0.14	0.14	0.00	0.00	0.18	0.00	0.67	0.00	0.00	0.67	0.67
Sat Flow, veh/h	1212	82	164	1612	0	1434	1668	1752	0	1570	1648	1397
Grp Volume(v), veh/h	196	0	0	5	0	5	5	1082	0	5	348	65
Grp Sat Flow(s),veh/h/ln	1457	0	0	1612	0	1434	1668	1752	0	1570	1648	1397
Q Serve(g_s), s	17.9	0.0	0.0	0.4	0.0	0.4	0.1	72.1	0.0	0.1	11.9	2.2
Cycle Q Clear(g_c), s	17.9	0.0	0.0	0.4	0.0	0.4	0.1	72.1	0.0	0.1	11.9	2.2
Prop In Lane	0.83		0.11	1.00		1.00	1.00		0.00	1.00		1.00
Lane Grp Cap(c), veh/h	252	0	0	276	0	264	586	1168	0	119	1099	931
V/C Ratio(X)	0.78	0.00	0.00	0.02	0.00	0.02	0.01	0.93	0.00	0.04	0.32	0.07
Avail Cap(c_a), veh/h	252	0	0	360	0	349	630	1242	0	159	1169	991
HCM Platoon Ratio	1.00	1.00	1.00	1.00	1.00	1.00	1.00	1.00	1.00	1.00	1.00	1.00
Upstream Filter(I)	1.00	0.00	0.00	1.00	0.00	1.00	1.00	1.00	0.00	1.00	1.00	1.00
Uniform Delay (d), s/veh	57.3	0.0	0.0	47.6	0.0	44.7	7.8	19.5	0.0	26.9	9.4	7.8
Incr Delay (d2), s/veh	15.1	0.0	0.0	0.0	0.0	0.0	0.0	12.2	0.0	0.1	0.4	0.1
Initial Q Delay(d3),s/veh	0.0	0.0	0.0	0.0	0.0	0.0	0.0	0.0	0.0	0.0	0.0	0.0
%ile BackOfQ(50%),veh/ln	7.7	0.0	0.0	0.1	0.0	0.1	0.0	30.9	0.0	0.1	4.3	0.7
Unsig. Movement Delay, s/veh												
LnGrp Delay(d),s/veh	72.4	0.0	0.0	47.6	0.0	44.8	7.8	31.7	0.0	27.1	9.8	7.9
LnGrp LOS	E	A	A	D	A	D	A	C	A	C	A	A
Approach Vol, veh/h		196			10			1087			418	
Approach Delay, s/veh		72.4			46.2			31.6			9.7	
Approach LOS		E			D			C			A	

Timer - Assigned Phs	1	2	3	4	5	6		8
Phs Duration (G+Y+Rc), s	6.0	96.3	6.0	25.5	6.0	96.3		31.5
Change Period (Y+Rc), s	5.5	7.1	5.5	6.9	5.5	7.1		* 6.9
Max Green Setting (Gmax), s	4.0	94.9	7.5	18.6	4.0	94.9		* 33
Max Q Clear Time (g_c+I1), s	2.1	74.1	2.4	19.9	2.1	13.9		2.4
Green Ext Time (p_c), s	0.0	15.1	0.0	0.0	0.0	5.7		0.0

Intersection Summary	
HCM 6th Ctrl Delay	31.0
HCM 6th LOS	C

Notes

* HCM 6th computational engine requires equal clearance times for the phases crossing the barrier.

Movement	EBL	EBT	EBR	WBL	WBT	WBR	NBL	NBT	NBR	SBL	SBT	SBR
Lane Configurations												
Traffic Volume (vph)	590	270	80	5	910	520	100	95	10	95	25	260
Future Volume (vph)	590	270	80	5	910	520	100	95	10	95	25	260
Ideal Flow (vphpl)	1900	1900	1900	1900	1900	1900	1900	1900	1900	1900	1900	1900
Total Lost time (s)	6.4	6.4	6.4	6.4	6.4	6.4	5.0	5.0		5.0	5.0	6.4
Lane Util. Factor	1.00	0.95	1.00	1.00	0.95	1.00	1.00	1.00		1.00	1.00	1.00
Frpb, ped/bikes	1.00	1.00	1.00	1.00	1.00	1.00	1.00	1.00		1.00	1.00	1.00
Flpb, ped/bikes	1.00	1.00	1.00	1.00	1.00	1.00	0.99	1.00		1.00	1.00	1.00
Frt	1.00	1.00	0.85	1.00	1.00	0.85	1.00	0.99		1.00	1.00	0.85
Flt Protected	0.95	1.00	1.00	0.95	1.00	1.00	0.95	1.00		0.95	1.00	1.00
Satd. Flow (prot)	1687	3374	1509	1687	3374	1509	1778	1853		1736	1827	1546
Flt Permitted	0.95	1.00	1.00	0.95	1.00	1.00	0.52	1.00		0.69	1.00	1.00
Satd. Flow (perm)	1687	3374	1509	1687	3374	1509	980	1853		1252	1827	1546
Peak-hour factor, PHF	0.95	0.95	0.95	0.95	0.95	0.95	0.95	0.95	0.95	0.95	0.95	0.95
Adj. Flow (vph)	621	284	84	5	958	547	105	100	11	100	26	274
RTOR Reduction (vph)	0	0	27	0	0	246	0	3	0	0	0	56
Lane Group Flow (vph)	621	284	57	5	958	301	105	108	0	100	26	218
Confl. Peds. (#/hr)							9					9
Heavy Vehicles (%)	7%	7%	7%	7%	7%	7%	1%	1%	1%	4%	4%	4%
Turn Type	Prot	NA	Perm	Prot	NA	Perm	pm+pt	NA		pm+pt	NA	pm+ov
Protected Phases	5 15	2		1	6		3	8		7	4	5 15
Permitted Phases			2			6	8			4		4
Actuated Green, G (s)	51.8	106.7	106.7	1.3	49.8	49.8	30.1	19.1		18.1	12.1	63.9
Effective Green, g (s)	51.8	106.7	106.7	1.3	49.8	49.8	30.1	19.1		18.1	12.1	63.9
Actuated g/C Ratio	0.33	0.68	0.68	0.01	0.32	0.32	0.19	0.12		0.12	0.08	0.41
Clearance Time (s)		6.4	6.4	6.4	6.4	6.4	5.0	5.0		5.0	5.0	
Vehicle Extension (s)		5.0	5.0	3.0	5.0	5.0	3.0	3.0		3.0	3.0	
Lane Grp Cap (vph)	560	2309	1032	14	1077	482	255	227		163	141	633
v/s Ratio Prot	c0.37	0.08		0.00	c0.28		c0.03	0.06		c0.02	0.01	0.11
v/s Ratio Perm			0.04			0.20	0.05			c0.05		0.03
v/c Ratio	1.11	0.12	0.06	0.36	0.89	0.62	0.41	0.48		0.61	0.18	0.34
Uniform Delay, d1	52.1	8.5	8.1	76.9	50.4	45.1	54.0	63.7		64.8	67.3	31.6
Progression Factor	1.00	1.00	1.00	1.00	1.00	1.00	1.00	1.00		1.00	1.00	1.00
Incremental Delay, d2	71.5	0.1	0.0	14.9	9.8	3.5	1.1	1.6		6.7	0.6	0.3
Delay (s)	123.5	8.5	8.1	91.8	60.3	48.6	55.1	65.3		71.4	67.9	31.9
Level of Service	F	A	A	F	E	D	E	E		E	E	C
Approach Delay (s)		80.7			56.2			60.4			44.1	
Approach LOS		F			E			E			D	

Intersection Summary			
HCM 2000 Control Delay	62.7	HCM 2000 Level of Service	E
HCM 2000 Volume to Capacity ratio	0.91		
Actuated Cycle Length (s)	155.9	Sum of lost time (s)	29.2
Intersection Capacity Utilization	89.5%	ICU Level of Service	E
Analysis Period (min)	15		

c Critical Lane Group

Movement	EBT	EBR	WBL	WBT	NBL	NBR
Lane Configurations						
Traffic Volume (veh/h)	340	210	315	955	960	600
Future Volume (veh/h)	340	210	315	955	960	600
Initial Q (Qb), veh	0	0	0	0	0	0
Ped-Bike Adj(A_pbT)		1.00	1.00		1.00	1.00
Parking Bus, Adj	1.00	1.00	1.00	1.00	1.00	1.00
Work Zone On Approach	No			No	No	
Adj Sat Flow, veh/h/ln	1678	1678	1781	1781	1885	1885
Adj Flow Rate, veh/h	370	0	342	1038	1043	652
Peak Hour Factor	0.92	0.92	0.92	0.92	0.92	0.92
Percent Heavy Veh, %	15	15	8	8	1	1
Cap, veh/h	814		366	1760	1358	623
Arrive On Green	0.26	0.00	0.22	0.52	0.39	0.39
Sat Flow, veh/h	3272	1422	1697	3474	3483	1598
Grp Volume(v), veh/h	370	0	342	1038	1043	652
Grp Sat Flow(s),veh/h/ln	1594	1422	1697	1692	1742	1598
Q Serve(g_s), s	12.7	0.0	25.7	27.6	33.9	50.7
Cycle Q Clear(g_c), s	12.7	0.0	25.7	27.6	33.9	50.7
Prop In Lane		1.00	1.00		1.00	1.00
Lane Grp Cap(c), veh/h	814		366	1760	1358	623
V/C Ratio(X)	0.45		0.94	0.59	0.77	1.05
Avail Cap(c_a), veh/h	814		386	1760	1358	623
HCM Platoon Ratio	1.00	1.00	1.00	1.00	1.00	1.00
Upstream Filter(I)	1.00	0.00	0.84	0.84	1.00	1.00
Uniform Delay (d), s/veh	40.8	0.0	50.1	21.6	34.5	39.7
Incr Delay (d2), s/veh	1.8	0.0	26.1	1.2	4.2	48.8
Initial Q Delay(d3),s/veh	0.0	0.0	0.0	0.0	0.0	0.0
%ile BackOfQ(50%),veh/ln	5.2	0.0	13.6	11.1	15.0	28.0
Unsig. Movement Delay, s/veh						
LnGrp Delay(d),s/veh	42.6	0.0	76.2	22.8	38.7	88.4
LnGrp LOS	D		E	C	D	F
Approach Vol, veh/h	370	A		1380	1695	
Approach Delay, s/veh	42.6			36.1	57.9	
Approach LOS	D			D	E	

Timer - Assigned Phs	1	2				6	8
Phs Duration (G+Y+Rc), s	34.4	39.6				74.0	56.0
Change Period (Y+Rc), s	6.4	6.4				6.4	5.3
Max Green Setting (Gmax), s	29.6	31.6				67.6	50.7
Max Q Clear Time (g_c+I1), s	27.7	14.7				29.6	52.7
Green Ext Time (p_c), s	0.3	3.8				17.8	0.0

Intersection Summary	
HCM 6th Ctrl Delay	47.5
HCM 6th LOS	D

Notes

Unsignalized Delay for [EBR] is excluded from calculations of the approach delay and intersection delay.

Movement	EBL	EBT	EBR	WBL	WBT	WBR	NBL	NBT	NBR	SBL	SBT	SBR
Lane Configurations												
Traffic Volume (vph)	25	450	0	0	1650	460	0	0	345	0	0	610
Future Volume (vph)	25	450	0	0	1650	460	0	0	345	0	0	610
Ideal Flow (vphpl)	1900	1900	1900	1900	1900	1900	1900	1900	1900	1900	1900	1900
Total Lost time (s)	5.0	5.0			5.0	5.0			4.0			5.0
Lane Util. Factor	1.00	0.95			0.91	1.00			1.00			1.00
Frt	1.00	1.00			1.00	0.85			0.86			0.86
Flt Protected	0.95	1.00			1.00	1.00			1.00			1.00
Satd. Flow (prot)	1556	3112			4988	1553			1405			1522
Flt Permitted	0.95	1.00			1.00	1.00			1.00			1.00
Satd. Flow (perm)	1556	3112			4988	1553			1405			1522
Peak-hour factor, PHF	0.98	0.98	0.98	0.98	0.98	0.98	0.98	0.98	0.98	0.98	0.98	0.98
Adj. Flow (vph)	26	459	0	0	1684	469	0	0	352	0	0	622
RTOR Reduction (vph)	0	0	0	0	0	168	0	0	0	0	0	68
Lane Group Flow (vph)	26	459	0	0	1684	301	0	0	352	0	0	554
Heavy Vehicles (%)	16%	16%	16%	4%	4%	4%	17%	17%	17%	8%	8%	8%
Turn Type	Prot	NA			NA	custom			Free			pt+ov
Protected Phases	1	1 6 8			6	4 5 13						1 8
Permitted Phases						6			Free			8 1
Actuated Green, G (s)	24.3	96.0			57.0	70.7			110.0			34.0
Effective Green, g (s)	24.3	96.0			57.0	70.7			110.0			34.0
Actuated g/C Ratio	0.22	0.87			0.52	0.64			1.00			0.31
Clearance Time (s)	5.0				5.0							
Vehicle Extension (s)	2.0				2.0							
Lane Grp Cap (vph)	343	2715			2584	1068			1405			470
v/s Ratio Prot	0.02	0.15			c0.34	0.11						c0.36
v/s Ratio Perm						0.09			c0.25			
v/c Ratio	0.08	0.17			0.65	0.28			0.25			1.18
Uniform Delay, d1	34.0	1.0			19.3	8.6			0.0			38.0
Progression Factor	0.82	0.99			1.00	1.00			1.00			1.00
Incremental Delay, d2	0.0	0.0			1.3	0.1			0.4			100.3
Delay (s)	28.0	1.0			20.6	8.6			0.4			138.3
Level of Service	C	A			C	A			A			F
Approach Delay (s)		2.5			18.0			0.4			138.3	
Approach LOS		A			B			A			F	

Intersection Summary			
HCM 2000 Control Delay	34.9	HCM 2000 Level of Service	C
HCM 2000 Volume to Capacity ratio	0.88		
Actuated Cycle Length (s)	110.0	Sum of lost time (s)	20.0
Intersection Capacity Utilization	78.0%	ICU Level of Service	D
Analysis Period (min)	15		
c Critical Lane Group			

Movement	EBL	EBT	EBR	WBL	WBT	WBR	NBL	NBT	NBR	SBL	SBT	SBR
Lane Configurations												
Traffic Volume (vph)	420	175	75	640	515	1105	0	0	0	300	865	485
Future Volume (vph)	420	175	75	640	515	1105	0	0	0	300	865	485
Ideal Flow (vphpl)	1900	1900	1900	1900	1900	1900	1900	1900	1900	1900	1900	1900
Total Lost time (s)	5.0	5.0		5.0	5.0	4.0				5.0	5.0	5.0
Lane Util. Factor	0.97	0.95		1.00	0.95	1.00				0.97	0.95	0.95
Frpb, ped/bikes	1.00	0.99		1.00	1.00	1.00				1.00	1.00	1.00
Flpb, ped/bikes	1.00	1.00		1.00	1.00	1.00				1.00	1.00	1.00
Frt	1.00	0.96		1.00	1.00	0.85				1.00	1.00	0.85
Flt Protected	0.95	1.00		0.95	1.00	1.00				0.95	1.00	1.00
Satd. Flow (prot)	3335	3255		1719	3438	1538				3335	1719	1461
Flt Permitted	0.95	1.00		0.95	1.00	1.00				0.95	1.00	1.00
Satd. Flow (perm)	3335	3255		1719	3438	1538				3335	1719	1461
Peak-hour factor, PHF	0.97	0.97	0.97	0.97	0.97	0.97	0.97	0.97	0.97	0.97	0.97	0.97
Adj. Flow (vph)	433	180	77	660	531	1139	0	0	0	309	892	500
RTOR Reduction (vph)	0	44	0	0	0	4	0	0	0	0	0	0
Lane Group Flow (vph)	433	213	0	660	531	1135	0	0	0	309	892	500
Confl. Peds. (#/hr)			2	2								
Heavy Vehicles (%)	5%	5%	5%	5%	5%	5%	0%	0%	0%	5%	5%	5%
Turn Type	Split	NA		Split	NA	custom				Split	NA	custom
Protected Phases	2	2		3	3	7				4	4	4 5
Permitted Phases						7						
Actuated Green, G (s)	14.0	14.0		45.0	45.0	87.0				36.0	36.0	55.0
Effective Green, g (s)	14.0	14.0		45.0	45.0	87.0				36.0	36.0	55.0
Actuated g/C Ratio	0.13	0.13		0.41	0.41	0.79				0.33	0.33	0.50
Clearance Time (s)	5.0	5.0		5.0	5.0	4.0				5.0	5.0	
Vehicle Extension (s)	3.0	3.0		3.0	3.0	3.0				3.0	3.0	
Lane Grp Cap (vph)	424	414		703	1406	1216				1091	562	730
v/s Ratio Prot	c0.13	0.07		0.38	0.15	c0.74				0.09	c0.52	0.34
v/s Ratio Perm												
v/c Ratio	1.02	0.52		0.94	0.38	0.93				0.28	1.59	0.68
Uniform Delay, d1	48.0	44.8		31.2	22.7	9.2				27.4	37.0	20.9
Progression Factor	1.00	1.00		0.71	0.62	1.38				1.00	1.00	1.00
Incremental Delay, d2	49.2	1.1		16.6	0.5	10.4				0.1	272.6	2.7
Delay (s)	97.2	45.9		38.9	14.6	23.1				27.6	309.6	23.6
Level of Service	F	D		D	B	C				C	F	C
Approach Delay (s)		78.1			25.6			0.0			174.3	
Approach LOS		E			C			A			F	

Intersection Summary			
HCM 2000 Control Delay	86.9	HCM 2000 Level of Service	F
HCM 2000 Volume to Capacity ratio	1.22		
Actuated Cycle Length (s)	110.0	Sum of lost time (s)	15.0
Intersection Capacity Utilization	110.8%	ICU Level of Service	H
Analysis Period (min)	15		

c Critical Lane Group

Movement	EBL	EBT	EBR	WBL	WBT	WBR	NBL	NBT	NBR	SBL	SBT	SBR
Lane Configurations												
Traffic Volume (veh/h)	465	430	110	765	560	165	100	805	620	80	775	170
Future Volume (veh/h)	465	430	110	765	560	165	100	805	620	80	775	170
Initial Q (Qb), veh	0	0	0	0	0	0	0	0	0	0	0	0
Ped-Bike Adj(A_pbT)	1.00		1.00	1.00		1.00	1.00		1.00	1.00		1.00
Parking Bus, Adj	1.00	1.00	1.00	1.00	1.00	1.00	1.00	1.00	1.00	1.00	1.00	1.00
Work Zone On Approach		No			No			No			No	
Adj Sat Flow, veh/h/ln	1841	1841	1841	1856	1856	1856	1826	1826	1826	1811	1811	1811
Adj Flow Rate, veh/h	515	393	0	789	577	0	103	830	0	82	799	0
Peak Hour Factor	0.97	0.97	0.97	0.97	0.97	0.97	0.97	0.97	0.97	0.97	0.97	0.97
Percent Heavy Veh, %	4	4	4	3	3	3	5	5	5	6	6	6
Cap, veh/h	755	396		1278	671		127	997		119	1008	
Arrive On Green	0.22	0.22	0.00	0.36	0.36	0.00	0.07	0.20	0.00	0.07	0.20	0.00
Sat Flow, veh/h	3506	1841	1560	3534	1856	1572	1739	4985	1547	1725	4944	1535
Grp Volume(v), veh/h	515	393	0	789	577	0	103	830	0	82	799	0
Grp Sat Flow(s),veh/h/ln	1753	1841	1560	1767	1856	1572	1739	1662	1547	1725	1648	1535
Q Serve(g_s), s	17.6	27.7	0.0	23.9	37.5	0.0	7.6	20.8	0.0	6.0	19.9	0.0
Cycle Q Clear(g_c), s	17.6	27.7	0.0	23.9	37.5	0.0	7.6	20.8	0.0	6.0	19.9	0.0
Prop In Lane	1.00		1.00	1.00		1.00	1.00		1.00	1.00		1.00
Lane Grp Cap(c), veh/h	755	396		1278	671		127	997		119	1008	
V/C Ratio(X)	0.68	0.99		0.62	0.86		0.81	0.83		0.69	0.79	
Avail Cap(c_a), veh/h	755	396		1278	671		227	997		133	1008	
HCM Platoon Ratio	1.00	1.00	1.00	1.00	1.00	1.00	1.00	1.00	1.00	1.00	1.00	1.00
Upstream Filter(I)	1.00	1.00	0.00	0.74	0.74	0.00	0.19	0.19	0.00	1.00	1.00	0.00
Uniform Delay (d), s/veh	46.9	50.9	0.0	34.1	38.5	0.0	59.4	49.9	0.0	59.1	49.1	0.0
Incr Delay (d2), s/veh	4.9	43.1	0.0	1.7	10.5	0.0	2.4	1.7	0.0	14.2	6.4	0.0
Initial Q Delay(d3),s/veh	0.0	0.0	0.0	0.0	0.0	0.0	0.0	0.0	0.0	0.0	0.0	0.0
%ile BackOfQ(50%),veh/ln	8.1	17.3	0.0	10.4	18.7	0.0	3.4	8.8	0.0	3.1	8.8	0.0
Unsig. Movement Delay, s/veh												
LnGrp Delay(d),s/veh	51.8	94.0	0.0	35.8	48.9	0.0	61.8	51.6	0.0	73.3	55.5	0.0
LnGrp LOS	D	F		D	D		E	D		E	E	
Approach Vol, veh/h		908	A		1366	A		933	A		881	A
Approach Delay, s/veh		70.1			41.3			52.7			57.2	
Approach LOS		E			D			D			E	

Timer - Assigned Phs		2	3	4		6	7	8				
Phs Duration (G+Y+Rc), s		52.0	13.5	31.5		33.0	14.0	31.0				
Change Period (Y+Rc), s		5.0	4.0	5.0		5.0	5.0	* 5				
Max Green Setting (Gmax), s		47.0	17.0	19.0		28.0	10.0	* 26				
Max Q Clear Time (g_c+I1), s		39.5	9.6	21.9		29.7	8.0	22.8				
Green Ext Time (p_c), s		7.2	0.1	0.0		0.0	0.0	2.3				

Intersection Summary	
HCM 6th Ctrl Delay	53.7
HCM 6th LOS	D

Notes

User approved volume balancing among the lanes for turning movement.
* HCM 6th computational engine requires equal clearance times for the phases crossing the barrier.
User approved changes to right turn type.

Movement	EBL	EBT	EBR	WBL	WBT	WBR	NBL	NBT	NBR	SBL	SBT	SBR
Lane Configurations												
Traffic Volume (veh/h)	80	1045	5	5	1330	5	30	5	10	5	5	130
Future Volume (veh/h)	80	1045	5	5	1330	5	30	5	10	5	5	130
Initial Q (Qb), veh	0	0	0	0	0	0	0	0	0	0	0	0
Ped-Bike Adj(A_pbT)	1.00		1.00	1.00		1.00	1.00		1.00	1.00		1.00
Parking Bus, Adj	1.00	1.00	1.00	1.00	1.00	1.00	1.00	1.00	1.00	1.00	1.00	1.00
Work Zone On Approach		No			No			No			No	
Adj Sat Flow, veh/h/ln	1856	1856	1856	1856	1856	1856	1900	1900	1900	1885	1885	1885
Adj Flow Rate, veh/h	86	1124	5	5	1430	5	32	5	11	5	5	140
Peak Hour Factor	0.93	0.93	0.93	0.93	0.93	0.93	0.93	0.93	0.93	0.93	0.93	0.93
Percent Heavy Veh, %	3	3	3	3	3	3	0	0	0	1	1	1
Cap, veh/h	107	2701	12	11	2510	9	180	55	120	112	100	165
Arrive On Green	0.12	1.00	1.00	0.01	0.70	0.70	0.10	0.10	0.10	0.10	0.10	0.10
Sat Flow, veh/h	1767	3599	16	1767	3603	13	1263	528	1162	687	965	1598
Grp Volume(v), veh/h	86	550	579	5	699	736	32	0	16	10	0	140
Grp Sat Flow(s),veh/h/ln	1767	1763	1853	1767	1763	1853	1263	0	1691	1653	0	1598
Q Serve(g_s), s	6.2	0.0	0.0	0.4	26.0	26.0	3.0	0.0	1.1	0.0	0.0	11.2
Cycle Q Clear(g_c), s	6.2	0.0	0.0	0.4	26.0	26.0	3.7	0.0	1.1	0.6	0.0	11.2
Prop In Lane	1.00		0.01	1.00		0.01	1.00		0.69	0.50		1.00
Lane Grp Cap(c), veh/h	107	1323	1390	11	1228	1291	180	0	174	212	0	165
V/C Ratio(X)	0.81	0.42	0.42	0.45	0.57	0.57	0.18	0.00	0.09	0.05	0.00	0.85
Avail Cap(c_a), veh/h	155	1323	1390	155	1228	1291	360	0	416	257	0	209
HCM Platoon Ratio	2.00	2.00	2.00	1.00	1.00	1.00	1.00	1.00	1.00	1.00	1.00	1.00
Upstream Filter(I)	0.60	0.60	0.60	1.00	1.00	1.00	1.00	0.00	1.00	1.00	0.00	1.00
Uniform Delay (d), s/veh	56.4	0.0	0.0	64.4	9.9	9.9	54.2	0.0	52.8	52.6	0.0	57.3
Incr Delay (d2), s/veh	11.2	0.3	0.3	25.3	1.9	1.8	0.7	0.0	0.3	0.1	0.0	24.6
Initial Q Delay(d3),s/veh	0.0	0.0	0.0	0.0	0.0	0.0	0.0	0.0	0.0	0.0	0.0	0.0
%ile BackOfQ(50%),veh/ln	2.9	0.1	0.1	0.2	9.8	10.2	1.0	0.0	0.5	0.3	0.0	5.7
Unsig. Movement Delay, s/veh												
LnGrp Delay(d),s/veh	67.6	0.3	0.3	89.6	11.9	11.8	54.9	0.0	53.1	52.7	0.0	81.9
LnGrp LOS	E	A	A	F	B	B	D	A	D	D	A	F
Approach Vol, veh/h		1215			1440			48			150	
Approach Delay, s/veh		5.0			12.1			54.3			79.9	
Approach LOS		A			B			D			E	

Timer - Assigned Phs	1	2		4	5	6		8
Phs Duration (G+Y+Rc), s	14.5	97.1		18.4	7.4	104.2		18.4
Change Period (Y+Rc), s	6.6	6.6		5.0	6.6	6.6		5.0
Max Green Setting (Gmax), s	11.4	68.4		32.0	11.4	68.4		17.0
Max Q Clear Time (g_c+I1), s	8.2	28.0		5.7	2.4	2.0		13.2
Green Ext Time (p_c), s	0.1	39.7		0.2	0.0	27.4		0.2

Intersection Summary			
HCM 6th Ctrl Delay			13.4
HCM 6th LOS			B

Movement	EBL	EBT	EBR	WBL	WBT	WBR	NBL	NBT	NBR	SBL	SBT	SBR
Lane Configurations												
Traffic Volume (veh/h)	25	985	50	30	1160	25	150	15	80	45	10	25
Future Volume (veh/h)	25	985	50	30	1160	25	150	15	80	45	10	25
Initial Q (Qb), veh	0	0	0	0	0	0	0	0	0	0	0	0
Ped-Bike Adj(A_pbT)	1.00		0.99	1.00		0.99	1.00		0.98	1.00		0.94
Parking Bus, Adj	1.00	1.00	1.00	1.00	1.00	1.00	1.00	1.00	1.00	1.00	1.00	1.00
Work Zone On Approach		No			No			No			No	
Adj Sat Flow, veh/h/ln	1796	1796	1796	1856	1856	1856	1870	1870	1870	1826	1826	1826
Adj Flow Rate, veh/h	26	1005	51	31	1184	26	153	15	82	46	10	26
Peak Hour Factor	0.98	0.98	0.98	0.98	0.98	0.98	0.98	0.98	0.98	0.98	0.98	0.98
Percent Heavy Veh, %	7	7	7	3	3	3	2	2	2	5	5	5
Cap, veh/h	40	2242	114	46	2402	53	193	27	146	71	18	46
Arrive On Green	0.02	0.68	0.68	0.05	1.00	1.00	0.11	0.11	0.11	0.04	0.04	0.04
Sat Flow, veh/h	1711	3304	168	1767	3526	77	1781	246	1346	1739	429	1115
Grp Volume(v), veh/h	26	519	537	31	592	618	153	0	97	46	0	36
Grp Sat Flow(s),veh/h/ln	1711	1706	1765	1767	1763	1841	1781	0	1592	1739	0	1544
Q Serve(g_s), s	2.0	18.3	18.3	2.2	0.0	0.0	10.9	0.0	7.5	3.4	0.0	3.0
Cycle Q Clear(g_c), s	2.0	18.3	18.3	2.2	0.0	0.0	10.9	0.0	7.5	3.4	0.0	3.0
Prop In Lane	1.00		0.09	1.00		0.04	1.00		0.85	1.00		0.72
Lane Grp Cap(c), veh/h	40	1158	1198	46	1201	1254	193	0	172	71	0	63
V/C Ratio(X)	0.65	0.45	0.45	0.68	0.49	0.49	0.79	0.00	0.56	0.64	0.00	0.57
Avail Cap(c_a), veh/h	184	1158	1198	190	1201	1254	247	0	220	241	0	214
HCM Platoon Ratio	1.00	1.00	1.00	2.00	2.00	2.00	1.00	1.00	1.00	1.00	1.00	1.00
Upstream Filter(I)	1.00	1.00	1.00	0.87	0.87	0.87	1.00	0.00	1.00	1.00	0.00	1.00
Uniform Delay (d), s/veh	62.9	9.7	9.7	61.1	0.0	0.0	56.5	0.0	55.0	61.4	0.0	61.2
Incr Delay (d2), s/veh	16.3	1.3	1.2	14.1	1.3	1.2	14.7	0.0	4.1	12.9	0.0	10.8
Initial Q Delay(d3),s/veh	0.0	0.0	0.0	0.0	0.0	0.0	0.0	0.0	0.0	0.0	0.0	0.0
%ile BackOfQ(50%),veh/ln	1.0	6.7	7.0	1.2	0.4	0.4	5.7	0.0	3.2	1.8	0.0	1.4
Unsig. Movement Delay, s/veh												
LnGrp Delay(d),s/veh	79.2	10.9	10.9	75.2	1.3	1.2	71.2	0.0	59.1	74.3	0.0	72.0
LnGrp LOS	E	B	B	E	A	A	E	A	E	E	A	E
Approach Vol, veh/h		1082			1241			250			82	
Approach Delay, s/veh		12.5			3.1			66.5			73.3	
Approach LOS		B			A			E			E	

Timer - Assigned Phs	1	2		4	5	6		8
Phs Duration (G+Y+Rc), s	7.0	93.5		19.1	7.4	93.2		10.3
Change Period (Y+Rc), s	4.0	5.0		5.0	4.0	5.0		5.0
Max Green Setting (Gmax), s	14.0	61.0		18.0	14.0	61.0		18.0
Max Q Clear Time (g_c+I1), s	4.0	2.0		12.9	4.2	20.3		5.4
Green Ext Time (p_c), s	0.0	41.8		0.6	0.0	26.3		0.2

Intersection Summary	
HCM 6th Ctrl Delay	15.1
HCM 6th LOS	B

Notes

User approved pedestrian interval to be less than phase max green.

Movement	EBL	EBT	EBR	WBL	WBT	WBR	NBL	NBT	NBR	SBL	SBT	SBR
Lane Configurations												
Traffic Volume (veh/h)	20	1060	30	5	1180	90	25	5	15	55	5	10
Future Volume (veh/h)	20	1060	30	5	1180	90	25	5	15	55	5	10
Initial Q (Qb), veh	0	0	0	0	0	0	0	0	0	0	0	0
Ped-Bike Adj(A_pbT)	1.00		1.00	1.00		1.00	1.00		1.00	1.00		1.00
Parking Bus, Adj	1.00	1.00	1.00	1.00	1.00	1.00	1.00	1.00	1.00	1.00	1.00	1.00
Work Zone On Approach		No			No			No			No	
Adj Sat Flow, veh/h/ln	1841	1841	1841	1870	1870	1870	1307	1307	1307	1826	1826	1826
Adj Flow Rate, veh/h	21	1093	31	5	1216	93	26	5	15	57	5	10
Peak Hour Factor	0.97	0.97	0.97	0.97	0.97	0.97	0.97	0.97	0.97	0.97	0.97	0.97
Percent Heavy Veh, %	4	4	4	2	2	2	40	40	40	5	5	5
Cap, veh/h	36	2741	78	11	2594	198	71	15	21	160	12	181
Arrive On Green	0.04	1.00	1.00	0.01	0.78	0.78	0.10	0.10	0.10	0.10	0.10	0.10
Sat Flow, veh/h	1753	3473	98	1781	3346	255	288	157	215	1102	122	1543
Grp Volume(v), veh/h	21	550	574	5	645	664	46	0	0	62	0	10
Grp Sat Flow(s),veh/h/ln	1753	1749	1823	1781	1777	1824	660	0	0	1224	0	1543
Q Serve(g_s), s	1.5	0.0	0.0	0.4	16.6	16.7	3.8	0.0	0.0	0.0	0.0	0.7
Cycle Q Clear(g_c), s	1.5	0.0	0.0	0.4	16.6	16.7	10.2	0.0	0.0	6.4	0.0	0.7
Prop In Lane	1.00		0.05	1.00		0.14	0.57		0.33	0.92		1.00
Lane Grp Cap(c), veh/h	36	1380	1439	11	1377	1414	107	0	0	171	0	181
V/C Ratio(X)	0.59	0.40	0.40	0.44	0.47	0.47	0.43	0.00	0.00	0.36	0.00	0.06
Avail Cap(c_a), veh/h	94	1380	1439	69	1377	1414	199	0	0	293	0	316
HCM Platoon Ratio	2.00	2.00	2.00	1.00	1.00	1.00	1.00	1.00	1.00	1.00	1.00	1.00
Upstream Filter(I)	0.85	0.85	0.85	1.00	1.00	1.00	1.00	0.00	0.00	1.00	0.00	1.00
Uniform Delay (d), s/veh	61.8	0.0	0.0	64.4	5.2	5.2	58.4	0.0	0.0	55.9	0.0	51.0
Incr Delay (d2), s/veh	12.2	0.7	0.7	24.8	1.1	1.1	2.7	0.0	0.0	1.3	0.0	0.1
Initial Q Delay(d3),s/veh	0.0	0.0	0.0	0.0	0.0	0.0	0.0	0.0	0.0	0.0	0.0	0.0
%ile BackOfQ(50%),veh/ln	0.8	0.3	0.3	0.2	5.5	5.7	1.6	0.0	0.0	2.0	0.0	0.3
Unsig. Movement Delay, s/veh												
LnGrp Delay(d),s/veh	74.0	0.7	0.7	89.1	6.3	6.3	61.1	0.0	0.0	57.2	0.0	51.1
LnGrp LOS	E	A	A	F	A	A	E	A	A	E	A	D
Approach Vol, veh/h		1145			1314			46			72	
Approach Delay, s/veh		2.1			6.6			61.1			56.3	
Approach LOS		A			A			E			E	

Timer - Assigned Phs	1	2		4	5	6		8
Phs Duration (G+Y+Rc), s	6.7	105.8		17.6	4.8	107.6		17.6
Change Period (Y+Rc), s	4.0	5.0		5.0	4.0	5.0		5.0
Max Green Setting (Gmax), s	7.0	85.0		24.0	5.0	87.0		24.0
Max Q Clear Time (g_c+I1), s	3.5	18.7		8.4	2.4	2.0		12.2
Green Ext Time (p_c), s	0.0	51.0		0.1	0.0	57.9		0.1

Intersection Summary	
HCM 6th Ctrl Delay	7.0
HCM 6th LOS	A

Notes

User approved pedestrian interval to be less than phase max green.

Movement	EBL	EBT	EBR	WBL	WBT	WBR	NBL	NBT	NBR	SBL	SBT	SBR
Lane Configurations												
Traffic Volume (veh/h)	10	925	5	5	1255	10	10	0	5	10	0	5
Future Volume (veh/h)	10	925	5	5	1255	10	10	0	5	10	0	5
Initial Q (Qb), veh	0	0	0	0	0	0	0	0	0	0	0	0
Ped-Bike Adj(A_pbT)	1.00		1.00	1.00		1.00	1.00		1.00	1.00		1.00
Parking Bus, Adj	1.00	1.00	1.00	1.00	1.00	1.00	1.00	1.00	1.00	1.00	1.00	1.00
Work Zone On Approach		No			No			No			No	
Adj Sat Flow, veh/h/ln	1796	1796	1796	1781	1781	1781	1796	1796	1796	1633	1633	1633
Adj Flow Rate, veh/h	11	1039	6	6	1410	11	11	0	6	11	0	6
Peak Hour Factor	0.89	0.89	0.89	0.89	0.89	0.89	0.89	0.89	0.89	0.89	0.89	0.89
Percent Heavy Veh, %	7	7	7	8	8	8	7	7	7	18	18	18
Cap, veh/h	24	2300	1026	13	2261	1008	115	0	50	115	0	45
Arrive On Green	0.01	0.67	0.67	0.01	0.67	0.67	0.03	0.00	0.03	0.03	0.00	0.03
Sat Flow, veh/h	1711	3413	1522	1697	3385	1510	0	0	1522	0	0	1384
Grp Volume(v), veh/h	11	1039	6	6	1410	11	11	0	6	11	0	6
Grp Sat Flow(s),veh/h/ln	1711	1706	1522	1697	1692	1510	0	0	1522	0	0	1384
Q Serve(g_s), s	0.4	8.9	0.1	0.2	14.8	0.2	0.0	0.0	0.2	0.0	0.0	0.3
Cycle Q Clear(g_c), s	0.4	8.9	0.1	0.2	14.8	0.2	2.0	0.0	0.2	2.0	0.0	0.3
Prop In Lane	1.00		1.00	1.00		1.00	1.00		1.00	1.00		1.00
Lane Grp Cap(c), veh/h	24	2300	1026	13	2261	1008	115	0	50	115	0	45
V/C Ratio(X)	0.46	0.45	0.01	0.45	0.62	0.01	0.10	0.00	0.12	0.10	0.00	0.13
Avail Cap(c_a), veh/h	137	2912	1299	136	2888	1288	744	0	757	431	0	400
HCM Platoon Ratio	1.00	1.00	1.00	1.00	1.00	1.00	1.00	1.00	1.00	1.00	1.00	1.00
Upstream Filter(I)	1.00	1.00	1.00	1.00	1.00	1.00	1.00	0.00	1.00	1.00	0.00	1.00
Uniform Delay (d), s/veh	30.5	4.8	3.3	30.8	5.9	3.5	31.2	0.0	29.3	31.2	0.0	29.3
Incr Delay (d2), s/veh	13.3	0.3	0.0	21.5	0.6	0.0	0.4	0.0	1.1	0.8	0.0	2.8
Initial Q Delay(d3),s/veh	0.0	0.0	0.0	0.0	0.0	0.0	0.0	0.0	0.0	0.0	0.0	0.0
%ile BackOfQ(50%),veh/ln	0.2	2.2	0.0	0.2	3.7	0.0	0.2	0.0	0.1	0.2	0.0	0.1
Unsig. Movement Delay, s/veh												
LnGrp Delay(d),s/veh	43.8	5.1	3.3	52.3	6.5	3.5	31.5	0.0	30.4	31.9	0.0	32.1
LnGrp LOS	D	A	A	D	A	A	C	A	C	C	A	C
Approach Vol, veh/h		1056			1427			17			17	
Approach Delay, s/veh		5.5			6.7			31.1			32.0	
Approach LOS		A			A			C			C	

Timer - Assigned Phs	1	2		4	5	6		8
Phs Duration (G+Y+Rc), s	7.3	48.0		7.0	6.9	48.4		7.0
Change Period (Y+Rc), s	6.4	6.4		5.0	6.4	6.4		5.0
Max Green Setting (Gmax), s	5.0	53.2		18.0	5.0	53.2		31.0
Max Q Clear Time (g_c+I1), s	2.4	16.8		4.0	2.2	10.9		4.0
Green Ext Time (p_c), s	0.0	24.9		0.0	0.0	18.8		0.0

Intersection Summary	
HCM 6th Ctrl Delay	6.5
HCM 6th LOS	A

Notes

User approved pedestrian interval to be less than phase max green.

Intersection	
Int Delay, s/veh	2.5

Movement	EBL	EBT	WBT	WBR	SBL	SBR
Lane Configurations						
Traffic Vol, veh/h	35	95	100	10	5	35
Future Vol, veh/h	35	95	100	10	5	35
Conflicting Peds, #/hr	0	0	0	0	0	0
Sign Control	Free	Free	Free	Free	Stop	Stop
RT Channelized	-	None	-	None	-	None
Storage Length	450	-	-	-	0	-
Veh in Median Storage, #	-	0	0	-	0	-
Grade, %	-	0	0	-	0	-
Peak Hour Factor	78	78	78	78	78	78
Heavy Vehicles, %	86	86	77	77	54	54
Mvmt Flow	45	122	128	13	6	45

Major/Minor	Major1		Major2		Minor2	
Conflicting Flow All	141	0	-	0	347	135
Stage 1	-	-	-	-	135	-
Stage 2	-	-	-	-	212	-
Critical Hdwy	4.96	-	-	-	6.94	6.74
Critical Hdwy Stg 1	-	-	-	-	5.94	-
Critical Hdwy Stg 2	-	-	-	-	5.94	-
Follow-up Hdwy	2.974	-	-	-	3.986	3.786
Pot Cap-1 Maneuver	1056	-	-	-	557	792
Stage 1	-	-	-	-	778	-
Stage 2	-	-	-	-	714	-
Platoon blocked, %		-	-	-		
Mov Cap-1 Maneuver	1056	-	-	-	533	792
Mov Cap-2 Maneuver	-	-	-	-	533	-
Stage 1	-	-	-	-	745	-
Stage 2	-	-	-	-	714	-

Approach	EB	WB	SB
HCM Control Delay, s	2.3	0	10.2
HCM LOS			B

Minor Lane/Major Mvmt	EBL	EBT	WBT	WBR	SBLn1
Capacity (veh/h)	1056	-	-	-	747
HCM Lane V/C Ratio	0.042	-	-	-	0.069
HCM Control Delay (s)	8.6	-	-	-	10.2
HCM Lane LOS	A	-	-	-	B
HCM 95th %tile Q(veh)	0.1	-	-	-	0.2

Intersection	
Int Delay, s/veh	4.1

Movement	EBL	EBT	EBR	WBL	WBT	WBR	NBL	NBT	NBR	SBL	SBT	SBR
Lane Configurations												
Traffic Vol, veh/h	35	120	30	15	115	5	35	0	10	5	10	35
Future Vol, veh/h	35	120	30	15	115	5	35	0	10	5	10	35
Conflicting Peds, #/hr	0	0	0	0	0	0	0	0	0	0	0	0
Sign Control	Free	Free	Free	Free	Free	Free	Stop	Stop	Stop	Stop	Stop	Stop
RT Channelized	-	-	None	-	-	None	-	-	None	-	-	None
Storage Length	-	-	-	-	-	-	-	-	-	-	-	-
Veh in Median Storage, #	-	0	-	-	0	-	-	0	-	-	0	-
Grade, %	-	0	-	-	0	-	-	0	-	-	0	-
Peak Hour Factor	81	81	81	81	81	81	81	81	81	81	81	81
Heavy Vehicles, %	36	36	36	30	30	30	35	35	35	91	91	91
Mvmt Flow	43	148	37	19	142	6	43	0	12	6	12	43

Major/Minor	Major1			Major2			Minor1			Minor2		
Conflicting Flow All	148	0	0	185	0	0	464	439	93	343	454	145
Stage 1	-	-	-	-	-	-	253	253	-	183	183	-
Stage 2	-	-	-	-	-	-	211	186	-	160	271	-
Critical Hdwy	4.64	-	-	4.55	-	-	7.825	7.025	7.425	8.665	7.865	7.565
Critical Hdwy Stg 1	-	-	-	-	-	-	7.025	6.025	-	7.465	6.865	-
Critical Hdwy Stg 2	-	-	-	-	-	-	6.625	6.025	-	7.865	6.865	-
Follow-up Hdwy	2.542	-	-	2.485	-	-	3.8325	4.3325	3.6325	4.3645	4.8645	4.1645
Pot Cap-1 Maneuver	1232	-	-	1221	-	-	434	454	857	442	367	692
Stage 1	-	-	-	-	-	-	654	631	-	629	589	-
Stage 2	-	-	-	-	-	-	711	679	-	640	527	-
Platoon blocked, %		-	-		-	-						
Mov Cap-1 Maneuver	1232	-	-	1221	-	-	379	429	857	417	347	692
Mov Cap-2 Maneuver	-	-	-	-	-	-	379	429	-	417	347	-
Stage 1	-	-	-	-	-	-	628	606	-	604	579	-
Stage 2	-	-	-	-	-	-	641	667	-	606	506	-

Approach	EB	WB	NB	SB
HCM Control Delay, s	1.6	0.9	14.5	12.4
HCM LOS			B	B

Minor Lane/Major Mvmt	NBLn1	EBL	EBT	EBR	WBL	WBT	WBR	SBLn1
Capacity (veh/h)	433	1232	-	-	1221	-	-	547
HCM Lane V/C Ratio	0.128	0.035	-	-	0.015	-	-	0.113
HCM Control Delay (s)	14.5	8	0.1	-	8	0	-	12.4
HCM Lane LOS	B	A	A	-	A	A	-	B
HCM 95th %tile Q(veh)	0.4	0.1	-	-	0	-	-	0.4

Movement	WBL	WBR	NBT	NBR	SBL	SBT
Lane Configurations						
Traffic Volume (veh/h)	65	125	385	90	105	390
Future Volume (veh/h)	65	125	385	90	105	390
Initial Q (Qb), veh	0	0	0	0	0	0
Ped-Bike Adj(A_pbT)	1.00	1.00		1.00	1.00	
Parking Bus, Adj	1.00	1.00	1.00	1.00	1.00	1.00
Work Zone On Approach	No		No			No
Adj Sat Flow, veh/h/ln	1233	1233	1796	1796	1678	1678
Adj Flow Rate, veh/h	71	136	418	98	114	424
Peak Hour Factor	0.92	0.92	0.92	0.92	0.92	0.92
Percent Heavy Veh, %	45	45	7	7	15	15
Cap, veh/h	82	156	506	119	313	887
Arrive On Green	0.22	0.22	0.36	0.36	0.07	0.53
Sat Flow, veh/h	371	711	1407	330	1598	1678
Grp Volume(v), veh/h	208	0	0	516	114	424
Grp Sat Flow(s),veh/h/ln	1087	0	0	1737	1598	1678
Q Serve(g_s), s	10.6	0.0	0.0	15.5	2.3	9.1
Cycle Q Clear(g_c), s	10.6	0.0	0.0	15.5	2.3	9.1
Prop In Lane	0.34	0.65		0.19	1.00	
Lane Grp Cap(c), veh/h	239	0	0	624	313	887
V/C Ratio(X)	0.87	0.00	0.00	0.83	0.36	0.48
Avail Cap(c_a), veh/h	450	0	0	819	338	1081
HCM Platoon Ratio	1.00	1.00	1.00	1.00	1.00	1.00
Upstream Filter(I)	1.00	0.00	0.00	1.00	1.00	1.00
Uniform Delay (d), s/veh	21.5	0.0	0.0	16.7	11.9	8.5
Incr Delay (d2), s/veh	9.4	0.0	0.0	6.2	1.0	0.6
Initial Q Delay(d3),s/veh	0.0	0.0	0.0	0.0	0.0	0.0
%ile BackOfQ(50%),veh/ln	3.1	0.0	0.0	6.4	0.8	2.8
Unsig. Movement Delay, s/veh						
LnGrp Delay(d),s/veh	30.9	0.0	0.0	22.9	12.9	9.1
LnGrp LOS	C	A	A	C	B	A
Approach Vol, veh/h	208		516			538
Approach Delay, s/veh	30.9		22.9			9.9
Approach LOS	C		C			A

Timer - Assigned Phs	1	2				6	8
Phs Duration (G+Y+Rc), s	9.7	28.7				38.4	18.9
Change Period (Y+Rc), s	5.5	* 8.1				* 8.1	6.3
Max Green Setting (Gmax), s	5.1	* 27				* 37	23.7
Max Q Clear Time (g_c+I1), s	4.3	17.5				11.1	12.6
Green Ext Time (p_c), s	0.0	3.1				4.0	0.5

Intersection Summary	
HCM 6th Ctrl Delay	18.7
HCM 6th LOS	B

Notes

User approved pedestrian interval to be less than phase max green.

User approved volume balancing among the lanes for turning movement.

* HCM 6th computational engine requires equal clearance times for the phases crossing the barrier.

Movement	EBL	EBR	NBL	NBT	SBT	SBR
Lane Configurations						
Traffic Volume (vph)	65	65	85	415	355	85
Future Volume (vph)	65	65	85	415	355	85
Ideal Flow (vphpl)	1900	1900	1900	1900	1900	1900
Total Lost time (s)	5.0	5.0	6.5	6.5	6.5	6.5
Lane Util. Factor	1.00	1.00	1.00	1.00	1.00	1.00
Frt	1.00	0.85	1.00	1.00	1.00	0.85
Flt Protected	0.95	1.00	0.95	1.00	1.00	1.00
Satd. Flow (prot)	1671	1495	1719	1810	1792	1524
Flt Permitted	0.95	1.00	0.39	1.00	1.00	1.00
Satd. Flow (perm)	1671	1495	711	1810	1792	1524
Peak-hour factor, PHF	0.96	0.96	0.96	0.96	0.96	0.96
Adj. Flow (vph)	68	68	89	432	370	89
RTOR Reduction (vph)	0	61	0	0	0	45
Lane Group Flow (vph)	68	7	89	432	370	44
Heavy Vehicles (%)	8%	8%	5%	5%	6%	6%
Turn Type	custom	custom	pm+pt	NA	NA	Perm
Protected Phases	3	3	5	2	6	
Permitted Phases	4	4	2			6
Actuated Green, G (s)	5.2	5.2	32.2	32.2	20.4	20.4
Effective Green, g (s)	5.2	5.2	32.2	32.2	20.4	20.4
Actuated g/C Ratio	0.11	0.11	0.66	0.66	0.42	0.42
Clearance Time (s)	5.0	5.0	6.5	6.5	6.5	6.5
Vehicle Extension (s)	2.0	2.0	2.0	5.0	5.0	5.0
Lane Grp Cap (vph)	177	158	577	1191	747	635
v/s Ratio Prot	c0.04	0.00	0.02	c0.24	c0.21	
v/s Ratio Perm			0.08			0.03
v/c Ratio	0.38	0.05	0.15	0.36	0.50	0.07
Uniform Delay, d1	20.4	19.6	3.6	3.7	10.5	8.5
Progression Factor	1.00	1.00	1.00	1.00	1.00	1.00
Incremental Delay, d2	0.5	0.0	0.0	0.4	1.1	0.1
Delay (s)	20.9	19.7	3.7	4.1	11.6	8.6
Level of Service	C	B	A	A	B	A
Approach Delay (s)	20.3			4.1	11.0	
Approach LOS	C			A	B	

Intersection Summary			
HCM 2000 Control Delay	8.9	HCM 2000 Level of Service	A
HCM 2000 Volume to Capacity ratio	0.55		
Actuated Cycle Length (s)	48.9	Sum of lost time (s)	21.0
Intersection Capacity Utilization	42.6%	ICU Level of Service	A
Analysis Period (min)	15		
c Critical Lane Group			

Movement	EBL	EBR	NBL	NBT	SBT	SBR
Lane Configurations						
Traffic Volume (vph)	135	10	10	325	275	110
Future Volume (vph)	135	10	10	325	275	110
Ideal Flow (vphpl)	1900	1900	1900	1900	1900	1900
Total Lost time (s)	5.0	5.0	6.0	6.0	6.0	5.0
Lane Util. Factor	1.00	1.00	1.00	1.00	1.00	1.00
Frpb, ped/bikes	1.00	1.00	1.00	1.00	1.00	0.99
Flpb, ped/bikes	1.00	1.00	1.00	1.00	1.00	1.00
Frt	1.00	0.85	1.00	1.00	1.00	0.85
Flt Protected	0.95	1.00	0.95	1.00	1.00	1.00
Satd. Flow (prot)	1671	1495	1736	1827	1792	1504
Flt Permitted	0.95	1.00	0.40	1.00	1.00	1.00
Satd. Flow (perm)	1671	1495	734	1827	1792	1504
Peak-hour factor, PHF	0.95	0.95	0.95	0.95	0.95	0.95
Adj. Flow (vph)	142	11	11	342	289	116
RTOR Reduction (vph)	0	9	0	0	0	52
Lane Group Flow (vph)	142	2	11	342	289	64
Confl. Bikes (#/hr)						1
Heavy Vehicles (%)	8%	8%	4%	4%	6%	6%
Turn Type	custom	custom	pm+pt	NA	NA	pm+ov
Protected Phases	3	3	5	2	6	3
Permitted Phases	4	4	2			6
Actuated Green, G (s)	8.6	8.6	20.0	20.0	13.3	21.9
Effective Green, g (s)	8.6	8.6	20.0	20.0	13.3	21.9
Actuated g/C Ratio	0.22	0.22	0.51	0.51	0.34	0.55
Clearance Time (s)	5.0	5.0	6.0	6.0	6.0	5.0
Vehicle Extension (s)	2.0	2.0	2.0	2.0	2.0	2.0
Lane Grp Cap (vph)	362	324	388	922	601	831
v/s Ratio Prot	c0.08	0.00	0.00	c0.19	c0.16	0.02
v/s Ratio Perm			0.01			0.03
v/c Ratio	0.39	0.01	0.03	0.37	0.48	0.08
Uniform Delay, d1	13.3	12.2	5.3	6.0	10.4	4.1
Progression Factor	1.00	1.00	1.00	1.00	1.00	1.00
Incremental Delay, d2	0.3	0.0	0.0	0.1	0.2	0.0
Delay (s)	13.5	12.2	5.4	6.1	10.6	4.1
Level of Service	B	B	A	A	B	A
Approach Delay (s)	13.4			6.0	8.8	
Approach LOS	B			A	A	

Intersection Summary			
HCM 2000 Control Delay	8.5	HCM 2000 Level of Service	A
HCM 2000 Volume to Capacity ratio	0.58		
Actuated Cycle Length (s)	39.6	Sum of lost time (s)	20.0
Intersection Capacity Utilization	33.8%	ICU Level of Service	A
Analysis Period (min)	15		

c Critical Lane Group

Intersection	
Int Delay, s/veh	1.2

Movement	EBL	EBT	EBR	WBL	WBT	WBR	NBL	NBT	NBR	SBL	SBT	SBR
Lane Configurations												
Traffic Vol, veh/h	0	0	0	25	0	15	20	220	0	0	95	155
Future Vol, veh/h	0	0	0	25	0	15	20	220	0	0	95	155
Conflicting Peds, #/hr	0	0	0	0	0	0	0	0	0	0	0	0
Sign Control	Stop	Stop	Stop	Stop	Stop	Stop	Free	Free	Free	Free	Free	Free
RT Channelized	-	-	None	-	-	None	-	-	None	-	-	None
Storage Length	-	-	-	-	-	500	175	-	-	-	-	375
Veh in Median Storage, #	-	1	-	-	0	-	-	0	-	-	0	-
Grade, %	-	0	-	-	0	-	-	0	-	-	0	-
Peak Hour Factor	92	92	92	92	92	92	92	92	92	92	92	92
Heavy Vehicles, %	0	0	0	7	7	7	6	6	6	4	4	4
Mvmt Flow	0	0	0	27	0	16	22	239	0	0	103	168

Major/Minor	Minor1		Major1			Major2			
Conflicting Flow All	470	554	239	271	0	-	-	-	0
Stage 1	283	283	-	-	-	-	-	-	-
Stage 2	187	271	-	-	-	-	-	-	-
Critical Hdwy	6.47	6.57	6.27	4.16	-	-	-	-	-
Critical Hdwy Stg 1	5.47	5.57	-	-	-	-	-	-	-
Critical Hdwy Stg 2	5.47	5.57	-	-	-	-	-	-	-
Follow-up Hdwy	3.563	4.063	3.363	2.254	-	-	-	-	-
Pot Cap-1 Maneuver	543	434	788	1270	-	0	0	-	-
Stage 1	754	668	-	-	-	0	0	-	-
Stage 2	833	676	-	-	-	0	0	-	-
Platoon blocked, %					-			-	-
Mov Cap-1 Maneuver	534	0	788	1270	-	-	-	-	-
Mov Cap-2 Maneuver	534	0	-	-	-	-	-	-	-
Stage 1	741	0	-	-	-	-	-	-	-
Stage 2	833	0	-	-	-	-	-	-	-

Approach	WB	NB	SB
HCM Control Delay, s	11.2	0.7	0
HCM LOS	B		

Minor Lane/Major Mvmt	NBL	NBT	WBLn1	WBLn2	SBT	SBR
Capacity (veh/h)	1270	-	534	788	-	-
HCM Lane V/C Ratio	0.017	-	0.051	0.021	-	-
HCM Control Delay (s)	7.9	-	12.1	9.7	-	-
HCM Lane LOS	A	-	B	A	-	-
HCM 95th %tile Q(veh)	0.1	-	0.2	0.1	-	-

Movement	EBL	EBR	NBL	NBT	SBT	SBR
Lane Configurations						
Traffic Volume (veh/h)	150	10	25	105	110	15
Future Volume (veh/h)	150	10	25	105	110	15
Initial Q (Qb), veh	0	0	0	0	0	0
Ped-Bike Adj(A_pbT)	1.00	1.00	1.00			0.98
Parking Bus, Adj	1.00	1.00	1.00	1.00	1.00	1.00
Work Zone On Approach	No			No	No	
Adj Sat Flow, veh/h/ln	1841	1841	1811	1811	1752	1752
Adj Flow Rate, veh/h	172	11	29	121	126	17
Peak Hour Factor	0.87	0.87	0.87	0.87	0.87	0.87
Percent Heavy Veh, %	4	4	6	6	10	10
Cap, veh/h	381	339	239	253	291	39
Arrive On Green	0.22	0.22	0.19	0.19	0.19	0.19
Sat Flow, veh/h	1753	1560	197	1309	1507	203
Grp Volume(v), veh/h	172	11	150	0	0	143
Grp Sat Flow(s),veh/h/ln	1753	1560	1506	0	0	1710
Q Serve(g_s), s	1.8	0.1	0.5	0.0	0.0	1.6
Cycle Q Clear(g_c), s	1.8	0.1	2.1	0.0	0.0	1.6
Prop In Lane	1.00	1.00	0.19			0.12
Lane Grp Cap(c), veh/h	381	339	492	0	0	330
V/C Ratio(X)	0.45	0.03	0.30	0.00	0.00	0.43
Avail Cap(c_a), veh/h	3996	3556	4710	0	0	2698
HCM Platoon Ratio	1.00	1.00	1.00	1.00	1.00	1.00
Upstream Filter(I)	1.00	1.00	1.00	0.00	0.00	1.00
Uniform Delay (d), s/veh	7.3	6.6	7.7	0.0	0.0	7.6
Incr Delay (d2), s/veh	0.8	0.0	0.7	0.0	0.0	1.9
Initial Q Delay(d3),s/veh	0.0	0.0	0.0	0.0	0.0	0.0
%ile BackOfQ(50%),veh/ln	0.4	0.0	0.4	0.0	0.0	0.5
Unsig. Movement Delay, s/veh						
LnGrp Delay(d),s/veh	8.1	6.6	8.5	0.0	0.0	9.5
LnGrp LOS	A	A	A	A	A	A
Approach Vol, veh/h	183			150	143	
Approach Delay, s/veh	8.0			8.5	9.5	
Approach LOS	A			A	A	

Timer - Assigned Phs		2		4		6
Phs Duration (G+Y+Rc), s		10.4		10.9		10.4
Change Period (Y+Rc), s		6.3		6.3		6.3
Max Green Setting (Gmax), s		58.7		48.7		33.7
Max Q Clear Time (g_c+I1), s		4.1		3.8		3.6
Green Ext Time (p_c), s		1.9		0.5		1.5

Intersection Summary	
HCM 6th Ctrl Delay	8.6
HCM 6th LOS	A

Movement	EBL	EBT	EBR	WBL	WBT	WBR	NBL	NBT	NBR	SBL	SBT	SBR
Lane Configurations												
Traffic Volume (veh/h)	85	10	15	5	0	10	15	500	10	15	460	80
Future Volume (veh/h)	85	10	15	5	0	10	15	500	10	15	460	80
Initial Q (Qb), veh	0	0	0	0	0	0	0	0	0	0	0	0
Ped-Bike Adj(A_pbT)	1.00		0.98	1.00		1.00	1.00		0.98	1.00		1.00
Parking Bus, Adj	1.00	1.00	1.00	1.00	1.00	1.00	1.00	1.00	1.00	1.00	1.00	1.00
Work Zone On Approach		No			No			No			No	
Adj Sat Flow, veh/h/ln	1856	1856	1856	1559	1559	1559	1663	1663	1663	1678	1678	1678
Adj Flow Rate, veh/h	89	11	16	5	0	11	16	526	11	16	484	84
Peak Hour Factor	0.95	0.95	0.95	0.95	0.95	0.95	0.95	0.95	0.95	0.95	0.95	0.95
Percent Heavy Veh, %	3	3	3	23	23	23	16	16	16	15	15	15
Cap, veh/h	226	16	21	308	0	271	309	722	15	283	747	633
Arrive On Green	0.11	0.11	0.11	0.00	0.00	0.21	0.01	0.45	0.45	0.01	0.45	0.45
Sat Flow, veh/h	1094	156	200	1485	0	1321	1584	1622	34	1598	1678	1422
Grp Volume(v), veh/h	116	0	0	5	0	11	16	0	537	16	484	84
Grp Sat Flow(s),veh/h/ln	1450	0	0	1485	0	1321	1584	0	1656	1598	1678	1422
Q Serve(g_s), s	4.4	0.0	0.0	0.2	0.0	0.4	0.3	0.0	15.4	0.3	13.0	2.0
Cycle Q Clear(g_c), s	4.5	0.0	0.0	0.2	0.0	0.4	0.3	0.0	15.4	0.3	13.0	2.0
Prop In Lane	0.77		0.14	1.00		1.00	1.00		0.02	1.00		1.00
Lane Grp Cap(c), veh/h	263	0	0	308	0	271	309	0	737	283	747	633
V/C Ratio(X)	0.44	0.00	0.00	0.02	0.00	0.04	0.05	0.00	0.73	0.06	0.65	0.13
Avail Cap(c_a), veh/h	564	0	0	675	0	1010	963	0	1662	804	1539	1304
HCM Platoon Ratio	1.00	1.00	1.00	1.00	1.00	1.00	1.00	1.00	1.00	1.00	1.00	1.00
Upstream Filter(I)	1.00	0.00	0.00	1.00	0.00	1.00	1.00	0.00	1.00	1.00	1.00	1.00
Uniform Delay (d), s/veh	25.1	0.0	0.0	21.2	0.0	18.4	10.1	0.0	13.1	10.7	12.5	9.4
Incr Delay (d2), s/veh	1.6	0.0	0.0	0.0	0.0	0.1	0.1	0.0	3.0	0.1	2.0	0.2
Initial Q Delay(d3),s/veh	0.0	0.0	0.0	0.0	0.0	0.0	0.0	0.0	0.0	0.0	0.0	0.0
%ile BackOfQ(50%),veh/ln	1.6	0.0	0.0	0.1	0.0	0.1	0.1	0.0	5.4	0.1	4.5	0.6
Unsig. Movement Delay, s/veh												
LnGrp Delay(d),s/veh	26.7	0.0	0.0	21.2	0.0	18.5	10.2	0.0	16.1	10.8	14.5	9.6
LnGrp LOS	C	A	A	C	A	B	B	A	B	B	B	A
Approach Vol, veh/h		116			16			553			584	
Approach Delay, s/veh		26.7			19.3			15.9			13.7	
Approach LOS		C			B			B			B	

Timer - Assigned Phs	1	2	3	4	5	6		8
Phs Duration (G+Y+Rc), s	6.2	32.8	5.7	13.0	6.2	32.8		18.7
Change Period (Y+Rc), s	5.5	7.1	5.5	6.9	5.5	7.1		* 6.9
Max Green Setting (Gmax), s	19.5	57.9	14.5	18.1	24.5	52.9		* 44
Max Q Clear Time (g_c+I1), s	2.3	17.4	2.2	6.5	2.3	15.0		2.4
Green Ext Time (p_c), s	0.0	8.3	0.0	0.5	0.0	7.9		0.0

Intersection Summary	
HCM 6th Ctrl Delay	15.9
HCM 6th LOS	B

Notes

* HCM 6th computational engine requires equal clearance times for the phases crossing the barrier.

Movement	EBL	EBT	EBR	WBL	WBT	WBR	NBL	NBT	NBR	SBL	SBT	SBR
Lane Configurations												
Traffic Volume (veh/h)	325	545	60	10	500	125	60	40	15	140	40	320
Future Volume (veh/h)	325	545	60	10	500	125	60	40	15	140	40	320
Initial Q (Qb), veh	0	0	0	0	0	0	0	0	0	0	0	0
Ped-Bike Adj(A_pbT)	1.00		1.00	1.00		1.00	1.00		0.99	1.00		0.99
Parking Bus, Adj	1.00	1.00	1.00	1.00	1.00	1.00	1.00	1.00	1.00	1.00	1.00	1.00
Work Zone On Approach		No			No			No			No	
Adj Sat Flow, veh/h/ln	1767	1767	1767	1767	1767	1767	1885	1885	1885	1826	1826	1826
Adj Flow Rate, veh/h	335	562	62	10	515	129	62	41	15	144	41	330
Peak Hour Factor	0.97	0.97	0.97	0.97	0.97	0.97	0.97	0.97	0.97	0.97	0.97	0.97
Percent Heavy Veh, %	9	9	9	9	9	9	1	1	1	5	5	5
Cap, veh/h	367	1950	868	16	1249	556	80	194	71	171	367	647
Arrive On Green	0.22	0.58	0.58	0.01	0.37	0.37	0.04	0.15	0.15	0.10	0.20	0.20
Sat Flow, veh/h	1682	3357	1495	1682	3357	1493	1795	1313	481	1739	1826	1538
Grp Volume(v), veh/h	335	562	62	10	515	129	62	0	56	144	41	330
Grp Sat Flow(s),veh/h/ln	1682	1678	1495	1682	1678	1493	1795	0	1794	1739	1826	1538
Q Serve(g_s), s	23.7	10.3	2.2	0.7	13.9	7.3	4.2	0.0	3.4	9.9	2.2	19.4
Cycle Q Clear(g_c), s	23.7	10.3	2.2	0.7	13.9	7.3	4.2	0.0	3.4	9.9	2.2	19.4
Prop In Lane	1.00		1.00	1.00		1.00	1.00		0.27	1.00		1.00
Lane Grp Cap(c), veh/h	367	1950	868	16	1249	556	80	0	264	171	367	647
V/C Ratio(X)	0.91	0.29	0.07	0.63	0.41	0.23	0.77	0.00	0.21	0.84	0.11	0.51
Avail Cap(c_a), veh/h	578	1950	868	55	1249	556	162	0	529	270	657	892
HCM Platoon Ratio	1.00	1.00	1.00	1.00	1.00	1.00	1.00	1.00	1.00	1.00	1.00	1.00
Upstream Filter(I)	1.00	1.00	1.00	1.00	1.00	1.00	1.00	0.00	1.00	1.00	1.00	1.00
Uniform Delay (d), s/veh	46.6	12.9	11.2	60.3	28.5	26.4	57.8	0.0	45.9	54.1	39.9	26.2
Incr Delay (d2), s/veh	13.0	0.4	0.2	34.7	1.0	1.0	14.5	0.0	0.4	12.5	0.1	0.6
Initial Q Delay(d3),s/veh	0.0	0.0	0.0	0.0	0.0	0.0	0.0	0.0	0.0	0.0	0.0	0.0
%ile BackOfQ(50%),veh/ln	11.2	3.9	0.8	0.5	5.8	2.7	2.2	0.0	1.5	4.9	1.0	7.2
Unsig. Movement Delay, s/veh												
LnGrp Delay(d),s/veh	59.6	13.3	11.3	95.0	29.5	27.3	72.3	0.0	46.3	66.7	40.0	26.8
LnGrp LOS	E	B	B	F	C	C	E	A	D	E	D	C
Approach Vol, veh/h		959			654			118			515	
Approach Delay, s/veh		29.3			30.0			59.9			39.0	
Approach LOS		C			C			E			D	

Timer - Assigned Phs	1	2	3	4	5	6	7	8
Phs Duration (G+Y+Rc), s	6.2	76.0	10.5	29.6	31.7	50.5	17.0	23.0
Change Period (Y+Rc), s	5.0	5.0	5.0	5.0	5.0	5.0	5.0	5.0
Max Green Setting (Gmax), s	4.0	71.0	11.0	44.0	42.0	33.0	19.0	36.0
Max Q Clear Time (g_c+I1), s	2.7	12.3	6.2	21.4	25.7	15.9	11.9	5.4
Green Ext Time (p_c), s	0.0	4.7	0.0	1.4	0.9	3.7	0.2	0.3

Intersection Summary	
HCM 6th Ctrl Delay	33.4
HCM 6th LOS	C

Movement	EBT	EBR	WBL	WBT	NBL	NBR
Lane Configurations						
Traffic Volume (veh/h)	645	390	215	660	465	285
Future Volume (veh/h)	645	390	215	660	465	285
Initial Q (Qb), veh	0	0	0	0	0	0
Ped-Bike Adj(A_pbT)		1.00	1.00		1.00	1.00
Parking Bus, Adj	1.00	1.00	1.00	1.00	1.00	1.00
Work Zone On Approach	No			No	No	
Adj Sat Flow, veh/h/ln	1737	1737	1722	1722	1856	1856
Adj Flow Rate, veh/h	665	0	222	680	479	294
Peak Hour Factor	0.97	0.97	0.97	0.97	0.97	0.97
Percent Heavy Veh, %	11	11	12	12	3	3
Cap, veh/h	1902		249	2522	519	476
Arrive On Green	0.58	0.00	0.15	0.77	0.15	0.15
Sat Flow, veh/h	3387	1472	1640	3358	3428	1572
Grp Volume(v), veh/h	665	0	222	680	479	294
Grp Sat Flow(s),veh/h/ln	1650	1472	1640	1636	1714	1572
Q Serve(g_s), s	16.0	0.0	19.9	9.0	20.7	22.7
Cycle Q Clear(g_c), s	16.0	0.0	19.9	9.0	20.7	22.7
Prop In Lane		1.00	1.00		1.00	1.00
Lane Grp Cap(c), veh/h	1902		249	2522	519	476
V/C Ratio(X)	0.35		0.89	0.27	0.92	0.62
Avail Cap(c_a), veh/h	1902		477	2522	519	476
HCM Platoon Ratio	1.00	1.00	1.00	1.00	1.00	1.00
Upstream Filter(I)	1.00	0.00	0.94	0.94	1.00	1.00
Uniform Delay (d), s/veh	16.8	0.0	62.4	5.0	62.8	44.8
Incr Delay (d2), s/veh	0.5	0.0	11.9	0.2	22.6	2.8
Initial Q Delay(d3),s/veh	0.0	0.0	0.0	0.0	0.0	0.0
%ile BackOfQ(50%),veh/ln	6.3	0.0	9.2	2.9	10.7	9.8
Unsig. Movement Delay, s/veh						
LnGrp Delay(d),s/veh	17.4	0.0	74.3	5.2	85.4	47.7
LnGrp LOS	B		E	A	F	D
Approach Vol, veh/h	665	A		902	773	
Approach Delay, s/veh	17.4			22.2	71.0	
Approach LOS	B			C	E	

Timer - Assigned Phs	1	2				6	8
Phs Duration (G+Y+Rc), s	29.1	92.9				122.0	28.0
Change Period (Y+Rc), s	6.4	6.4				6.4	5.3
Max Green Setting (Gmax), s	43.6	65.6				115.6	22.7
Max Q Clear Time (g_c+I1), s	21.9	18.0				11.0	24.7
Green Ext Time (p_c), s	0.8	10.8				12.1	0.0

Intersection Summary	
HCM 6th Ctrl Delay	37.0
HCM 6th LOS	D

Notes

User approved pedestrian interval to be less than phase max green.

Unsignalized Delay for [EBR] is excluded from calculations of the approach delay and intersection delay.

Movement	EBL	EBT	EBR	WBL	WBT	WBR	NBL	NBT	NBR	SBL	SBT	SBR
Lane Configurations												
Traffic Volume (vph)	125	635	0	0	860	435	0	0	340	0	0	600
Future Volume (vph)	125	635	0	0	860	435	0	0	340	0	0	600
Ideal Flow (vphpl)	1900	1900	1900	1900	1900	1900	1900	1900	1900	1900	1900	1900
Total Lost time (s)	5.0	5.0			5.0	5.0			4.0			5.0
Lane Util. Factor	1.00	0.95			0.91	1.00			1.00			1.00
Frpb, ped/bikes	1.00	1.00			1.00	1.00			1.00			1.00
Flpb, ped/bikes	1.00	1.00			1.00	1.00			1.00			1.00
Frt	1.00	1.00			1.00	0.85			0.86			0.86
Flt Protected	0.95	1.00			1.00	1.00			1.00			1.00
Satd. Flow (prot)	1687	3374			4848	1509			1508			1596
Flt Permitted	0.95	1.00			1.00	1.00			1.00			1.00
Satd. Flow (perm)	1687	3374			4848	1509			1508			1596
Peak-hour factor, PHF	0.96	0.96	0.96	0.96	0.96	0.96	0.96	0.96	0.96	0.96	0.96	0.96
Adj. Flow (vph)	130	661	0	0	896	453	0	0	354	0	0	625
RTOR Reduction (vph)	0	0	0	0	0	0	0	0	0	0	0	52
Lane Group Flow (vph)	130	661	0	0	896	453	0	0	354	0	0	573
Confl. Peds. (#/hr)	4					4						
Heavy Vehicles (%)	7%	7%	7%	7%	7%	7%	9%	9%	9%	3%	3%	3%
Turn Type	Prot	NA			NA	custom			Free			pt+ov
Protected Phases	1!	1 6 8			6	4 6 8!						1 8
Permitted Phases									Free			8 1
Actuated Green, G (s)	34.5	100.0			55.5	100.0			100.0			34.5
Effective Green, g (s)	34.5	100.0			55.5	100.0			100.0			34.5
Actuated g/C Ratio	0.34	1.00			0.56	1.00			1.00			0.34
Clearance Time (s)	5.0				5.0							
Vehicle Extension (s)	2.0				2.0							
Lane Grp Cap (vph)	582	3374			2690	1509			1508			550
v/s Ratio Prot	0.08	0.20			c0.18	c0.30						c0.36
v/s Ratio Perm									0.23			
v/c Ratio	0.22	0.20			0.33	0.30			0.23			1.04
Uniform Delay, d1	23.2	0.0			12.1	0.0			0.0			32.8
Progression Factor	0.79	1.00			1.00	1.00			1.00			1.00
Incremental Delay, d2	0.8	0.0			0.3	0.0			0.4			49.5
Delay (s)	19.3	0.0			12.5	0.0			0.4			82.2
Level of Service	B	A			B	A			A			F
Approach Delay (s)		3.2			8.3			0.4			82.2	
Approach LOS		A			A			A			F	

Intersection Summary			
HCM 2000 Control Delay	20.9	HCM 2000 Level of Service	C
HCM 2000 Volume to Capacity ratio	0.63		
Actuated Cycle Length (s)	100.0	Sum of lost time (s)	13.0
Intersection Capacity Utilization	63.8%	ICU Level of Service	B
Analysis Period (min)	15		

! Phase conflict between lane groups.
c Critical Lane Group

Movement	EBL	EBT	EBR	WBL	WBT	WBR	NBL	NBT	NBR	SBL	SBT	SBR
Lane Configurations												
Traffic Volume (vph)	470	310	70	380	290	790	0	0	0	455	655	415
Future Volume (vph)	470	310	70	380	290	790	0	0	0	455	655	415
Ideal Flow (vphpl)	1900	1900	1900	1900	1900	1900	1900	1900	1900	1900	1900	1900
Total Lost time (s)	5.0	5.0		9.0	9.0	4.0				5.0	5.0	5.0
Lane Util. Factor	0.97	0.95		1.00	0.95	1.00				0.97	0.95	0.95
Frt	1.00	0.97		1.00	1.00	0.85				1.00	1.00	0.85
Flt Protected	0.95	1.00		0.95	1.00	1.00				0.95	1.00	1.00
Satd. Flow (prot)	3400	3408		1687	3374	1509				3273	1687	1434
Flt Permitted	0.95	1.00		0.95	1.00	1.00				0.95	1.00	1.00
Satd. Flow (perm)	3400	3408		1687	3374	1509				3273	1687	1434
Peak-hour factor, PHF	0.98	0.98	0.98	0.98	0.98	0.98	0.98	0.98	0.98	0.98	0.98	0.98
Adj. Flow (vph)	480	316	71	388	296	806	0	0	0	464	668	423
RTOR Reduction (vph)	0	19	0	0	0	8	0	0	0	0	0	0
Lane Group Flow (vph)	480	368	0	388	296	798	0	0	0	464	668	423
Heavy Vehicles (%)	3%	3%	3%	7%	7%	7%	0%	0%	0%	7%	7%	7%
Turn Type	Split	NA		Split	NA	custom				Split	NA	custom
Protected Phases	2	2		3	3	7				4	4	4 5
Permitted Phases						7						
Actuated Green, G (s)	18.0	18.0		26.8	26.8	73.0				36.2	36.2	59.2
Effective Green, g (s)	18.0	18.0		26.8	26.8	73.0				36.2	36.2	59.2
Actuated g/C Ratio	0.18	0.18		0.27	0.27	0.73				0.36	0.36	0.59
Clearance Time (s)	5.0	5.0		9.0	9.0	4.0				5.0	5.0	
Vehicle Extension (s)	4.0	4.0		3.0	3.0	3.0				3.0	3.0	
Lane Grp Cap (vph)	612	613		452	904	1101				1184	610	848
v/s Ratio Prot	c0.14	0.11		0.23	0.09	c0.53				0.14	c0.40	0.30
v/s Ratio Perm												
v/c Ratio	0.78	0.60		0.86	0.33	0.72				0.39	1.10	0.50
Uniform Delay, d1	39.1	37.7		34.8	29.4	7.7				23.7	31.9	11.8
Progression Factor	1.00	1.00		0.80	0.74	1.57				0.52	0.55	0.47
Incremental Delay, d2	9.7	4.3		13.0	0.2	2.0				0.2	61.0	0.4
Delay (s)	48.9	42.0		40.9	22.0	14.2				12.6	78.4	5.9
Level of Service	D	D		D	C	B				B	E	A
Approach Delay (s)		45.8			22.7			0.0			39.1	
Approach LOS		D			C			A			D	

Intersection Summary			
HCM 2000 Control Delay	34.3	HCM 2000 Level of Service	C
HCM 2000 Volume to Capacity ratio	0.96		
Actuated Cycle Length (s)	100.0	Sum of lost time (s)	19.0
Intersection Capacity Utilization	90.6%	ICU Level of Service	E
Analysis Period (min)	15		
c Critical Lane Group			

Movement	EBL	EBT	EBR	WBL	WBT	WBR	NBL	NBT	NBR	SBL	SBT	SBR
Lane Configurations												
Traffic Volume (veh/h)	170	245	125	725	180	195	70	560	630	170	660	85
Future Volume (veh/h)	170	245	125	725	180	195	70	560	630	170	660	85
Initial Q (Qb), veh	0	0	0	0	0	0	0	0	0	0	0	0
Ped-Bike Adj(A_pbT)	1.00		1.00	1.00		1.00	1.00		1.00	1.00		1.00
Parking Bus, Adj	1.00	1.00	1.00	1.00	1.00	1.00	1.00	1.00	1.00	1.00	1.00	1.00
Work Zone On Approach		No			No			No			No	
Adj Sat Flow, veh/h/ln	1856	1856	1856	1856	1856	1856	1841	1841	1841	1767	1767	1767
Adj Flow Rate, veh/h	143	298	0	684	273	0	72	577	0	175	680	0
Peak Hour Factor	0.97	0.97	0.97	0.97	0.97	0.97	0.97	0.97	0.97	0.97	0.97	0.97
Percent Heavy Veh, %	3	3	3	3	3	3	4	4	4	9	9	9
Cap, veh/h	250	524		954	501		94	905		351	1664	
Arrive On Green	0.14	0.14	0.00	0.09	0.09	0.00	0.02	0.06	0.00	0.21	0.35	0.00
Sat Flow, veh/h	1767	3711	1572	3534	1856	1572	1753	5025	1560	1682	4823	1497
Grp Volume(v), veh/h	143	298	0	684	273	0	72	577	0	175	680	0
Grp Sat Flow(s),veh/h/ln	1767	1856	1572	1767	1856	1572	1753	1675	1560	1682	1608	1497
Q Serve(g_s), s	7.6	7.5	0.0	18.8	14.1	0.0	4.1	11.2	0.0	9.2	10.7	0.0
Cycle Q Clear(g_c), s	7.6	7.5	0.0	18.8	14.1	0.0	4.1	11.2	0.0	9.2	10.7	0.0
Prop In Lane	1.00		1.00	1.00		1.00	1.00		1.00	1.00		1.00
Lane Grp Cap(c), veh/h	250	524		954	501		94	905		351	1664	
V/C Ratio(X)	0.57	0.57		0.72	0.54		0.77	0.64		0.50	0.41	
Avail Cap(c_a), veh/h	300	631		990	520		210	905		351	1664	
HCM Platoon Ratio	1.00	1.00	1.00	0.33	0.33	0.33	0.33	0.33	0.33	1.00	1.00	1.00
Upstream Filter(I)	1.00	1.00	0.00	0.90	0.90	0.00	0.58	0.58	0.00	1.00	1.00	0.00
Uniform Delay (d), s/veh	40.1	40.1	0.0	41.8	39.7	0.0	48.5	43.8	0.0	34.9	25.0	0.0
Incr Delay (d2), s/veh	9.2	4.4	0.0	3.6	3.0	0.0	10.3	2.0	0.0	1.6	0.7	0.0
Initial Q Delay(d3),s/veh	0.0	0.0	0.0	0.0	0.0	0.0	0.0	0.0	0.0	0.0	0.0	0.0
%ile BackOfQ(50%),veh/ln	3.9	3.7	0.0	9.3	7.4	0.0	2.1	5.2	0.0	3.9	4.2	0.0
Unsig. Movement Delay, s/veh												
LnGrp Delay(d),s/veh	49.3	44.5	0.0	45.4	42.7	0.0	58.7	45.9	0.0	36.5	25.7	0.0
LnGrp LOS	D	D		D	D		E	D		D	C	
Approach Vol, veh/h		441	A		957	A		649	A		855	A
Approach Delay, s/veh		46.1			44.7			47.3			27.9	
Approach LOS		D			D			D			C	

Timer - Assigned Phs		2	3	4		6	7	8				
Phs Duration (G+Y+Rc), s		32.0	9.4	39.5		19.1	25.9	23.0				
Change Period (Y+Rc), s		5.0	4.0	5.0		5.0	5.0	* 5				
Max Green Setting (Gmax), s		28.0	12.0	24.0		17.0	18.0	* 18				
Max Q Clear Time (g_c+I1), s		20.8	6.1	12.7		9.6	11.2	13.2				
Green Ext Time (p_c), s		6.2	0.1	6.7		4.5	0.4	2.5				

Intersection Summary	
HCM 6th Ctrl Delay	40.5
HCM 6th LOS	D

Notes

User approved pedestrian interval to be less than phase max green.

User approved volume balancing among the lanes for turning movement.

* HCM 6th computational engine requires equal clearance times for the phases crossing the barrier.

Movement	EBL	EBT	EBR	WBL	WBT	WBR	NBL	NBT	NBR	SBL	SBT	SBR
Lane Configurations												
Traffic Volume (veh/h)	70	975	5	5	1010	5	10	0	5	10	0	80
Future Volume (veh/h)	70	975	5	5	1010	5	10	0	5	10	0	80
Initial Q (Qb), veh	0	0	0	0	0	0	0	0	0	0	0	0
Ped-Bike Adj(A_pbT)	1.00		1.00	1.00		1.00	1.00		1.00	1.00		1.00
Parking Bus, Adj	1.00	1.00	1.00	1.00	1.00	1.00	1.00	1.00	1.00	1.00	1.00	1.00
Work Zone On Approach		No			No			No			No	
Adj Sat Flow, veh/h/ln	1841	1841	1841	1870	1870	1870	1900	1900	1900	1826	1826	1826
Adj Flow Rate, veh/h	72	1005	5	5	1041	5	10	0	5	10	0	82
Peak Hour Factor	0.97	0.97	0.97	0.97	0.97	0.97	0.97	0.97	0.97	0.97	0.97	0.97
Percent Heavy Veh, %	4	4	4	2	2	2	0	0	0	5	5	5
Cap, veh/h	93	2589	13	9	2459	12	154	0	115	166	0	110
Arrive On Green	0.07	0.96	0.96	0.01	0.68	0.68	0.07	0.00	0.07	0.07	0.00	0.07
Sat Flow, veh/h	1753	3568	18	1781	3627	17	1337	0	1610	1322	0	1547
Grp Volume(v), veh/h	72	492	518	5	510	536	10	0	5	10	0	82
Grp Sat Flow(s),veh/h/ln	1753	1749	1838	1781	1777	1867	1337	0	1610	1322	0	1547
Q Serve(g_s), s	4.0	1.6	1.6	0.3	13.0	13.0	0.7	0.0	0.3	0.7	0.0	5.2
Cycle Q Clear(g_c), s	4.0	1.6	1.6	0.3	13.0	13.0	1.7	0.0	0.3	1.0	0.0	5.2
Prop In Lane	1.00		0.01	1.00		0.01	1.00		1.00	1.00		1.00
Lane Grp Cap(c), veh/h	93	1269	1333	9	1205	1266	154	0	115	166	0	110
V/C Ratio(X)	0.78	0.39	0.39	0.54	0.42	0.42	0.06	0.00	0.04	0.06	0.00	0.74
Avail Cap(c_a), veh/h	200	1269	1333	78	1205	1266	345	0	345	363	0	331
HCM Platoon Ratio	1.33	1.33	1.33	1.00	1.00	1.00	1.00	1.00	1.00	1.00	1.00	1.00
Upstream Filter(I)	0.64	0.64	0.64	1.00	1.00	1.00	1.00	0.00	1.00	1.00	0.00	1.00
Uniform Delay (d), s/veh	45.9	0.5	0.5	49.6	7.3	7.3	44.4	0.0	43.3	43.7	0.0	45.5
Incr Delay (d2), s/veh	8.7	0.6	0.5	41.4	1.1	1.0	0.2	0.0	0.2	0.2	0.0	13.1
Initial Q Delay(d3),s/veh	0.0	0.0	0.0	0.0	0.0	0.0	0.0	0.0	0.0	0.0	0.0	0.0
%ile BackOfQ(50%),veh/ln	1.9	0.5	0.5	0.2	4.5	4.8	0.2	0.0	0.1	0.2	0.0	2.4
Unsig. Movement Delay, s/veh												
LnGrp Delay(d),s/veh	54.6	1.1	1.1	91.0	8.4	8.3	44.6	0.0	43.5	43.9	0.0	58.6
LnGrp LOS	D	A	A	F	A	A	D	A	D	D	A	E
Approach Vol, veh/h		1082			1051			15			92	
Approach Delay, s/veh		4.6			8.7			44.2			57.0	
Approach LOS		A			A			D			E	

Timer - Assigned Phs	1	2		4	5	6		8
Phs Duration (G+Y+Rc), s	11.9	74.4		13.7	7.1	79.2		13.7
Change Period (Y+Rc), s	6.6	6.6		6.6	6.6	6.6		6.6
Max Green Setting (Gmax), s	11.4	47.4		21.4	4.4	54.4		21.4
Max Q Clear Time (g_c+I1), s	6.0	15.0		3.7	2.3	3.6		7.2
Green Ext Time (p_c), s	0.1	29.8		0.0	0.0	10.6		0.3

Intersection Summary			
HCM 6th Ctrl Delay			9.0
HCM 6th LOS			A

Movement	EBL	EBT	EBR	WBL	WBT	WBR	NBL	NBT	NBR	SBL	SBT	SBR
Lane Configurations												
Traffic Volume (veh/h)	10	910	65	35	910	5	80	10	35	5	5	25
Future Volume (veh/h)	10	910	65	35	910	5	80	10	35	5	5	25
Initial Q (Qb), veh	0	0	0	0	0	0	0	0	0	0	0	0
Ped-Bike Adj(A_pbT)	1.00		1.00	1.00		1.00	1.00		1.00	1.00		0.99
Parking Bus, Adj	1.00	1.00	1.00	1.00	1.00	1.00	1.00	1.00	1.00	1.00	1.00	1.00
Work Zone On Approach		No			No			No			No	
Adj Sat Flow, veh/h/ln	1841	1841	1841	1811	1811	1811	1841	1841	1841	1900	1900	1900
Adj Flow Rate, veh/h	11	968	69	37	968	5	85	11	37	5	5	27
Peak Hour Factor	0.94	0.94	0.94	0.94	0.94	0.94	0.94	0.94	0.94	0.94	0.94	0.94
Percent Heavy Veh, %	4	4	4	6	6	6	4	4	4	0	0	0
Cap, veh/h	678	2233	159	55	1088	6	125	26	89	58	8	44
Arrive On Green	0.39	0.67	0.67	0.02	0.21	0.21	0.07	0.07	0.07	0.03	0.03	0.03
Sat Flow, veh/h	1753	3311	236	1725	3510	18	1753	369	1242	1810	256	1385
Grp Volume(v), veh/h	11	511	526	37	474	499	85	0	48	5	0	32
Grp Sat Flow(s),veh/h/ln	1753	1749	1798	1725	1721	1808	1753	0	1611	1810	0	1641
Q Serve(g_s), s	0.4	13.4	13.5	2.1	26.8	26.8	4.7	0.0	2.9	0.3	0.0	1.9
Cycle Q Clear(g_c), s	0.4	13.4	13.5	2.1	26.8	26.8	4.7	0.0	2.9	0.3	0.0	1.9
Prop In Lane	1.00		0.13	1.00		0.01	1.00		0.77	1.00		0.84
Lane Grp Cap(c), veh/h	678	1179	1213	55	533	560	125	0	115	58	0	53
V/C Ratio(X)	0.02	0.43	0.43	0.67	0.89	0.89	0.68	0.00	0.42	0.09	0.00	0.61
Avail Cap(c_a), veh/h	678	1179	1213	241	533	560	316	0	290	326	0	295
HCM Platoon Ratio	1.00	1.00	1.00	0.67	0.67	0.67	1.00	1.00	1.00	1.00	1.00	1.00
Upstream Filter(I)	1.00	1.00	1.00	0.94	0.94	0.94	1.00	0.00	1.00	1.00	0.00	1.00
Uniform Delay (d), s/veh	18.9	7.5	7.5	48.4	38.0	38.0	45.3	0.0	44.4	47.0	0.0	47.8
Incr Delay (d2), s/veh	0.0	1.2	1.1	12.3	18.6	17.9	8.9	0.0	3.4	0.9	0.0	15.0
Initial Q Delay(d3),s/veh	0.0	0.0	0.0	0.0	0.0	0.0	0.0	0.0	0.0	0.0	0.0	0.0
%ile BackOfQ(50%),veh/ln	0.2	4.7	4.8	1.1	14.3	15.0	2.4	0.0	1.2	0.1	0.0	1.0
Unsig. Movement Delay, s/veh												
LnGrp Delay(d),s/veh	18.9	8.7	8.6	60.7	56.5	55.8	54.2	0.0	47.9	47.9	0.0	62.8
LnGrp LOS	B	A	A	E	E	E	D	A	D	D	A	E
Approach Vol, veh/h		1048			1010			133			37	
Approach Delay, s/veh		8.7			56.3			51.9			60.8	
Approach LOS		A			E			D			E	

Timer - Assigned Phs	1	2		4	5	6		8
Phs Duration (G+Y+Rc), s	43.7	36.0		12.1	7.2	72.4		8.2
Change Period (Y+Rc), s	5.0	* 5		5.0	4.0	5.0		5.0
Max Green Setting (Gmax), s	14.0	* 31		18.0	14.0	31.0		18.0
Max Q Clear Time (g_c+I1), s	2.4	28.8		6.7	4.1	15.5		3.9
Green Ext Time (p_c), s	0.0	1.9		0.4	0.0	12.2		0.1

Intersection Summary	
HCM 6th Ctrl Delay	33.8
HCM 6th LOS	C

Notes

User approved pedestrian interval to be less than phase max green.

* HCM 6th computational engine requires equal clearance times for the phases crossing the barrier.

Movement	EBL	EBT	EBR	WBL	WBT	WBR	NBL	NBT	NBR	SBL	SBT	SBR
Lane Configurations												
Traffic Volume (veh/h)	25	890	30	25	870	45	45	5	25	55	5	30
Future Volume (veh/h)	25	890	30	25	870	45	45	5	25	55	5	30
Initial Q (Qb), veh	0	0	0	0	0	0	0	0	0	0	0	0
Ped-Bike Adj(A_pbT)	1.00		1.00	1.00		1.00	1.00		1.00	1.00		1.00
Parking Bus, Adj	1.00	1.00	1.00	1.00	1.00	1.00	1.00	1.00	1.00	1.00	1.00	1.00
Work Zone On Approach		No			No			No			No	
Adj Sat Flow, veh/h/ln	1856	1856	1856	1870	1870	1870	1470	1470	1470	1826	1826	1826
Adj Flow Rate, veh/h	26	927	31	26	906	47	47	5	26	57	5	31
Peak Hour Factor	0.96	0.96	0.96	0.96	0.96	0.96	0.96	0.96	0.96	0.96	0.96	0.96
Percent Heavy Veh, %	3	3	3	2	2	2	29	29	29	5	5	5
Cap, veh/h	45	2491	83	46	2459	128	108	18	34	205	15	223
Arrive On Green	0.03	0.95	0.95	0.03	0.72	0.72	0.12	0.12	0.12	0.12	0.12	0.12
Sat Flow, veh/h	1767	3481	116	1781	3437	178	426	148	287	1147	128	1543
Grp Volume(v), veh/h	26	469	489	26	468	485	78	0	0	62	0	31
Grp Sat Flow(s),veh/h/ln	1767	1763	1834	1781	1777	1838	861	0	0	1274	0	1543
Q Serve(g_s), s	1.4	2.0	2.0	1.4	10.2	10.2	5.1	0.0	0.0	0.0	0.0	1.8
Cycle Q Clear(g_c), s	1.4	2.0	2.0	1.4	10.2	10.2	9.6	0.0	0.0	4.6	0.0	1.8
Prop In Lane	1.00		0.06	1.00		0.10	0.60		0.33	0.92		1.00
Lane Grp Cap(c), veh/h	45	1261	1313	46	1271	1315	160	0	0	220	0	223
V/C Ratio(X)	0.57	0.37	0.37	0.57	0.37	0.37	0.49	0.00	0.00	0.28	0.00	0.14
Avail Cap(c_a), veh/h	194	1261	1313	338	1271	1315	265	0	0	346	0	364
HCM Platoon Ratio	1.33	1.33	1.33	1.00	1.00	1.00	1.00	1.00	1.00	1.00	1.00	1.00
Upstream Filter(I)	0.88	0.88	0.88	1.00	1.00	1.00	1.00	0.00	0.00	1.00	0.00	1.00
Uniform Delay (d), s/veh	47.7	0.7	0.7	48.2	5.5	5.5	43.8	0.0	0.0	40.8	0.0	37.3
Incr Delay (d2), s/veh	9.6	0.7	0.7	10.6	0.8	0.8	2.3	0.0	0.0	0.7	0.0	0.3
Initial Q Delay(d3),s/veh	0.0	0.0	0.0	0.0	0.0	0.0	0.0	0.0	0.0	0.0	0.0	0.0
%ile BackOfQ(50%),veh/ln	0.7	0.7	0.7	0.8	3.3	3.4	2.0	0.0	0.0	1.5	0.0	0.7
Unsig. Movement Delay, s/veh												
LnGrp Delay(d),s/veh	57.3	1.5	1.4	58.7	6.3	6.3	46.1	0.0	0.0	41.5	0.0	37.6
LnGrp LOS	E	A	A	E	A	A	D	A	A	D	A	D
Approach Vol, veh/h		984			979			78			93	
Approach Delay, s/veh		2.9			7.7			46.1			40.2	
Approach LOS		A			A			D			D	

Timer - Assigned Phs	1	2		4	5	6		8
Phs Duration (G+Y+Rc), s	6.6	76.6		16.9	6.6	76.6		16.9
Change Period (Y+Rc), s	4.0	5.0		5.0	4.0	5.0		5.0
Max Green Setting (Gmax), s	11.0	54.0		21.0	19.0	46.0		21.0
Max Q Clear Time (g_c+I1), s	3.4	12.2		6.6	3.4	4.0		11.6
Green Ext Time (p_c), s	0.0	26.5		0.2	0.0	29.7		0.1

Intersection Summary	
HCM 6th Ctrl Delay	8.3
HCM 6th LOS	A

Notes

User approved pedestrian interval to be less than phase max green.

Movement	EBL	EBT	EBR	WBL	WBT	WBR	NBL	NBT	NBR	SBL	SBT	SBR
Lane Configurations												
Traffic Volume (veh/h)	15	905	10	5	860	15	10	0	10	15	0	10
Future Volume (veh/h)	15	905	10	5	860	15	10	0	10	15	0	10
Initial Q (Qb), veh	0	0	0	0	0	0	0	0	0	0	0	0
Ped-Bike Adj(A_pbT)	1.00		1.00	1.00		1.00	1.00		1.00	1.00		1.00
Parking Bus, Adj	1.00	1.00	1.00	1.00	1.00	1.00	1.00	1.00	1.00	1.00	1.00	1.00
Work Zone On Approach		No			No			No			No	
Adj Sat Flow, veh/h/ln	1781	1781	1781	1796	1796	1796	1781	1781	1781	1826	1826	1826
Adj Flow Rate, veh/h	16	984	11	5	935	16	11	0	11	16	0	11
Peak Hour Factor	0.92	0.92	0.92	0.92	0.92	0.92	0.92	0.92	0.92	0.92	0.92	0.92
Percent Heavy Veh, %	8	8	8	7	7	7	8	8	8	5	5	5
Cap, veh/h	34	1907	850	12	1877	837	157	0	64	157	0	66
Arrive On Green	0.02	0.56	0.56	0.01	0.55	0.55	0.04	0.00	0.04	0.04	0.00	0.04
Sat Flow, veh/h	1697	3385	1510	1711	3413	1522	0	0	1510	0	0	1547
Grp Volume(v), veh/h	16	984	11	5	935	16	11	0	11	16	0	11
Grp Sat Flow(s),veh/h/ln	1697	1692	1510	1711	1706	1522	0	0	1510	0	0	1547
Q Serve(g_s), s	0.4	8.2	0.1	0.1	7.8	0.2	0.0	0.0	0.3	0.0	0.0	0.3
Cycle Q Clear(g_c), s	0.4	8.2	0.1	0.1	7.8	0.2	2.0	0.0	0.3	2.0	0.0	0.3
Prop In Lane	1.00		1.00	1.00		1.00	1.00		1.00	1.00		1.00
Lane Grp Cap(c), veh/h	34	1907	850	12	1877	837	157	0	64	157	0	66
V/C Ratio(X)	0.47	0.52	0.01	0.43	0.50	0.02	0.07	0.00	0.17	0.10	0.00	0.17
Avail Cap(c_a), veh/h	185	3182	1419	186	3208	1431	1001	0	1018	635	0	606
HCM Platoon Ratio	1.00	1.00	1.00	1.00	1.00	1.00	1.00	1.00	1.00	1.00	1.00	1.00
Upstream Filter(I)	1.00	1.00	1.00	1.00	1.00	1.00	1.00	0.00	1.00	1.00	0.00	1.00
Uniform Delay (d), s/veh	22.3	6.2	4.4	22.7	6.4	4.7	23.0	0.0	21.2	23.0	0.0	21.2
Incr Delay (d2), s/veh	9.7	0.5	0.0	23.7	0.4	0.0	0.2	0.0	1.2	0.6	0.0	2.5
Initial Q Delay(d3),s/veh	0.0	0.0	0.0	0.0	0.0	0.0	0.0	0.0	0.0	0.0	0.0	0.0
%ile BackOfQ(50%),veh/ln	0.2	2.0	0.0	0.1	1.9	0.1	0.1	0.0	0.1	0.2	0.0	0.1
Unsig. Movement Delay, s/veh												
LnGrp Delay(d),s/veh	32.0	6.6	4.4	46.5	6.8	4.7	23.2	0.0	22.5	23.6	0.0	23.7
LnGrp LOS	C	A	A	D	A	A	C	A	C	C	A	C
Approach Vol, veh/h		1011			956			22			27	
Approach Delay, s/veh		7.0			7.0			22.8			23.6	
Approach LOS		A			A			C			C	

Timer - Assigned Phs	1	2		4	5	6		8
Phs Duration (G+Y+Rc), s	7.3	31.7		7.0	6.7	32.3		7.0
Change Period (Y+Rc), s	6.4	6.4		5.0	6.4	6.4		5.0
Max Green Setting (Gmax), s	5.0	43.2		18.0	5.0	43.2		31.0
Max Q Clear Time (g_c+I1), s	2.4	9.8		4.0	2.1	10.2		4.0
Green Ext Time (p_c), s	0.0	14.9		0.1	0.0	15.7		0.0

Intersection Summary	
HCM 6th Ctrl Delay	7.4
HCM 6th LOS	A

Intersection	
Int Delay, s/veh	2.6

Movement	EBL	EBT	WBT	WBR	SBL	SBR
Lane Configurations						
Traffic Vol, veh/h	20	110	180	5	15	65
Future Vol, veh/h	20	110	180	5	15	65
Conflicting Peds, #/hr	0	0	0	0	0	0
Sign Control	Free	Free	Free	Free	Stop	Stop
RT Channelized	-	None	-	None	-	None
Storage Length	450	-	-	-	0	-
Veh in Median Storage, #	-	0	0	-	0	-
Grade, %	-	0	0	-	0	-
Peak Hour Factor	80	80	80	80	80	80
Heavy Vehicles, %	8	8	2	2	15	15
Mvmt Flow	25	138	225	6	19	81

Major/Minor	Major1		Major2		Minor2	
Conflicting Flow All	231	0	-	0	416	228
Stage 1	-	-	-	-	228	-
Stage 2	-	-	-	-	188	-
Critical Hdwy	4.18	-	-	-	6.55	6.35
Critical Hdwy Stg 1	-	-	-	-	5.55	-
Critical Hdwy Stg 2	-	-	-	-	5.55	-
Follow-up Hdwy	2.272	-	-	-	3.635	3.435
Pot Cap-1 Maneuver	1302	-	-	-	569	780
Stage 1	-	-	-	-	780	-
Stage 2	-	-	-	-	814	-
Platoon blocked, %		-	-	-		
Mov Cap-1 Maneuver	1302	-	-	-	558	780
Mov Cap-2 Maneuver	-	-	-	-	558	-
Stage 1	-	-	-	-	765	-
Stage 2	-	-	-	-	814	-

Approach	EB	WB	SB
HCM Control Delay, s	1.2	0	10.7
HCM LOS			B

Minor Lane/Major Mvmt	EBL	EBT	WBT	WBR	SBLn1
Capacity (veh/h)	1302	-	-	-	726
HCM Lane V/C Ratio	0.019	-	-	-	0.138
HCM Control Delay (s)	7.8	-	-	-	10.7
HCM Lane LOS	A	-	-	-	B
HCM 95th %tile Q(veh)	0.1	-	-	-	0.5

Intersection	
Int Delay, s/veh	2.6

Movement	EBL	EBT	EBR	WBL	WBT	WBR	NBL	NBT	NBR	SBL	SBT	SBR
Lane Configurations												
Traffic Vol, veh/h	5	115	65	75	170	5	15	0	10	5	5	10
Future Vol, veh/h	5	115	65	75	170	5	15	0	10	5	5	10
Conflicting Peds, #/hr	0	0	0	0	0	0	0	0	0	0	0	0
Sign Control	Free	Free	Free	Free	Free	Free	Stop	Stop	Stop	Stop	Stop	Stop
RT Channelized	-	-	None	-	-	None	-	-	None	-	-	None
Storage Length	-	-	-	-	-	-	-	-	-	-	-	-
Veh in Median Storage, #	-	0	-	-	0	-	-	0	-	-	0	-
Grade, %	-	0	-	-	0	-	-	0	-	-	0	-
Peak Hour Factor	81	81	81	81	81	81	81	81	81	81	81	81
Heavy Vehicles, %	9	9	9	7	7	7	0	0	0	53	53	53
Mvmt Flow	6	142	80	93	210	6	19	0	12	6	6	12

Major/Minor	Major1			Major2			Minor1			Minor2		
Conflicting Flow All	216	0	0	222	0	0	602	596	111	482	633	213
Stage 1	-	-	-	-	-	-	194	194	-	399	399	-
Stage 2	-	-	-	-	-	-	408	402	-	83	234	-
Critical Hdwy	4.235	-	-	4.205	-	-	7.3	6.5	6.9	8.095	7.295	6.995
Critical Hdwy Stg 1	-	-	-	-	-	-	6.5	5.5	-	6.895	6.295	-
Critical Hdwy Stg 2	-	-	-	-	-	-	6.1	5.5	-	7.295	6.295	-
Follow-up Hdwy	2.2855	-	-	2.2665	-	-	3.5	4	3.3	4.0035	4.5035	3.8035
Pot Cap-1 Maneuver	1307	-	-	1313	-	-	401	420	927	393	321	699
Stage 1	-	-	-	-	-	-	795	744	-	519	505	-
Stage 2	-	-	-	-	-	-	624	604	-	796	612	-
Platoon blocked, %		-	-		-	-						
Mov Cap-1 Maneuver	1307	-	-	1313	-	-	362	384	927	362	293	699
Mov Cap-2 Maneuver	-	-	-	-	-	-	362	384	-	362	293	-
Stage 1	-	-	-	-	-	-	791	740	-	516	464	-
Stage 2	-	-	-	-	-	-	556	555	-	781	609	-

Approach	EB	WB	NB	SB
HCM Control Delay, s	0.2	2.4	13	13.6
HCM LOS			B	B

Minor Lane/Major Mvmt	NBLn1	EBL	EBT	EBR	WBL	WBT	WBR	SBLn1
Capacity (veh/h)	479	1307	-	-	1313	-	-	443
HCM Lane V/C Ratio	0.064	0.005	-	-	0.071	-	-	0.056
HCM Control Delay (s)	13	7.8	0	-	8	0	-	13.6
HCM Lane LOS	B	A	A	-	A	A	-	B
HCM 95th %tile Q(veh)	0.2	0	-	-	0.2	-	-	0.2

Movement	WBL	WBR	NBT	NBR	SBL	SBT
Lane Configurations						
Traffic Volume (veh/h)	100	95	380	60	135	1095
Future Volume (veh/h)	100	95	380	60	135	1095
Initial Q (Qb), veh	0	0	0	0	0	0
Ped-Bike Adj(A_pbT)	1.00	1.00		1.00	1.00	
Parking Bus, Adj	1.00	1.00	1.00	1.00	1.00	1.00
Work Zone On Approach	No		No			No
Adj Sat Flow, veh/h/ln	1781	1781	1826	1826	1885	1885
Adj Flow Rate, veh/h	108	102	409	65	145	1177
Peak Hour Factor	0.93	0.93	0.93	0.93	0.93	0.93
Percent Heavy Veh, %	8	8	5	5	1	1
Cap, veh/h	128	121	856	136	552	1276
Arrive On Green	0.16	0.16	0.56	0.56	0.06	0.68
Sat Flow, veh/h	820	774	1538	244	1795	1885
Grp Volume(v), veh/h	211	0	0	474	145	1177
Grp Sat Flow(s),veh/h/ln	1601	0	0	1782	1795	1885
Q Serve(g_s), s	11.0	0.0	0.0	13.8	2.7	46.2
Cycle Q Clear(g_c), s	11.0	0.0	0.0	13.8	2.7	46.2
Prop In Lane	0.51	0.48		0.14	1.00	
Lane Grp Cap(c), veh/h	249	0	0	992	552	1276
V/C Ratio(X)	0.85	0.00	0.00	0.48	0.26	0.92
Avail Cap(c_a), veh/h	447	0	0	1046	588	1350
HCM Platoon Ratio	1.00	1.00	1.00	1.00	1.00	1.00
Upstream Filter(I)	1.00	0.00	0.00	1.00	1.00	1.00
Uniform Delay (d), s/veh	35.3	0.0	0.0	11.5	7.9	12.0
Incr Delay (d2), s/veh	7.7	0.0	0.0	0.5	0.4	10.6
Initial Q Delay(d3),s/veh	0.0	0.0	0.0	0.0	0.0	0.0
%ile BackOfQ(50%),veh/ln	4.7	0.0	0.0	5.1	1.0	18.9
Unsig. Movement Delay, s/veh						
LnGrp Delay(d),s/veh	43.0	0.0	0.0	12.0	8.3	22.6
LnGrp LOS	D	A	A	B	A	C
Approach Vol, veh/h	211		474			1322
Approach Delay, s/veh	43.0		12.0			21.0
Approach LOS	D		B			C

Timer - Assigned Phs	1	2				6	8
Phs Duration (G+Y+Rc), s	10.3	56.0				66.3	19.7
Change Period (Y+Rc), s	5.5	* 8.1				* 8.1	6.3
Max Green Setting (Gmax), s	6.6	* 51				* 62	24.0
Max Q Clear Time (g_c+I1), s	4.7	15.8				48.2	13.0
Green Ext Time (p_c), s	0.1	5.0				10.0	0.5

Intersection Summary	
HCM 6th Ctrl Delay	21.2
HCM 6th LOS	C

Notes

User approved pedestrian interval to be less than phase max green.

User approved volume balancing among the lanes for turning movement.

* HCM 6th computational engine requires equal clearance times for the phases crossing the barrier.

Movement	EBL	EBR	NBL	NBT	SBT	SBR
Lane Configurations						
Traffic Volume (vph)	50	265	75	315	1220	85
Future Volume (vph)	50	265	75	315	1220	85
Ideal Flow (vphpl)	1900	1900	1900	1900	1900	1900
Total Lost time (s)	5.0	5.0	6.5	6.5	6.5	6.5
Lane Util. Factor	1.00	1.00	1.00	1.00	1.00	1.00
Frt	1.00	0.85	1.00	1.00	1.00	0.85
Flt Protected	0.95	1.00	0.95	1.00	1.00	1.00
Satd. Flow (prot)	1752	1568	1787	1881	1881	1599
Flt Permitted	0.95	1.00	0.03	1.00	1.00	1.00
Satd. Flow (perm)	1752	1568	63	1881	1881	1599
Peak-hour factor, PHF	0.94	0.94	0.94	0.94	0.94	0.94
Adj. Flow (vph)	53	282	80	335	1298	90
RTOR Reduction (vph)	0	100	0	0	0	5
Lane Group Flow (vph)	53	182	80	335	1298	85
Heavy Vehicles (%)	3%	3%	1%	1%	1%	1%
Turn Type	custom	custom	pm+pt	NA	NA	Perm
Protected Phases	3	3	5	2	6	
Permitted Phases	4	4	2			6
Actuated Green, G (s)	31.9	31.9	196.6	196.6	178.9	178.9
Effective Green, g (s)	31.9	31.9	196.6	196.6	178.9	178.9
Actuated g/C Ratio	0.13	0.13	0.82	0.82	0.75	0.75
Clearance Time (s)	5.0	5.0	6.5	6.5	6.5	6.5
Vehicle Extension (s)	2.0	2.0	2.0	5.0	5.0	5.0
Lane Grp Cap (vph)	232	208	132	1540	1402	1191
v/s Ratio Prot	0.03	c0.12	c0.03	0.18	c0.69	
v/s Ratio Perm			0.47			0.05
v/c Ratio	0.23	0.88	0.61	0.22	0.93	0.07
Uniform Delay, d1	93.0	102.1	74.9	4.8	25.1	8.2
Progression Factor	1.00	1.00	1.04	1.71	1.00	1.00
Incremental Delay, d2	0.2	30.4	5.2	0.3	11.8	0.1
Delay (s)	93.2	132.5	82.8	8.5	36.9	8.3
Level of Service	F	F	F	A	D	A
Approach Delay (s)	126.3			22.8	35.1	
Approach LOS	F			C	D	

Intersection Summary			
HCM 2000 Control Delay	47.0	HCM 2000 Level of Service	D
HCM 2000 Volume to Capacity ratio	0.92		
Actuated Cycle Length (s)	240.0	Sum of lost time (s)	21.0
Intersection Capacity Utilization	90.2%	ICU Level of Service	E
Analysis Period (min)	15		
c Critical Lane Group			

Movement	EBL	EBR	NBL	NBT	SBT	SBR
Lane Configurations						
Traffic Volume (vph)	115	20	10	255	1165	230
Future Volume (vph)	115	20	10	255	1165	230
Ideal Flow (vphpl)	1900	1900	1900	1900	1900	1900
Total Lost time (s)	5.0	5.0	6.0	6.0	6.0	5.0
Lane Util. Factor	1.00	1.00	1.00	1.00	1.00	1.00
Frt	1.00	0.85	1.00	1.00	1.00	0.85
Flt Protected	0.95	1.00	0.95	1.00	1.00	1.00
Satd. Flow (prot)	1787	1599	1787	1881	1881	1599
Flt Permitted	0.95	1.00	0.05	1.00	1.00	1.00
Satd. Flow (perm)	1787	1599	88	1881	1881	1599
Peak-hour factor, PHF	0.91	0.91	0.91	0.91	0.91	0.91
Adj. Flow (vph)	126	22	11	280	1280	253
RTOR Reduction (vph)	0	20	0	0	0	22
Lane Group Flow (vph)	126	2	11	280	1280	231
Heavy Vehicles (%)	1%	1%	1%	1%	1%	1%
Turn Type	custom	custom	pm+pt	NA	NA	pm+ov
Protected Phases	3	3	5	2	6	3
Permitted Phases	4	4	2			6
Actuated Green, G (s)	12.8	12.8	96.2	96.2	89.2	102.0
Effective Green, g (s)	12.8	12.8	96.2	96.2	89.2	102.0
Actuated g/C Ratio	0.11	0.11	0.80	0.80	0.74	0.85
Clearance Time (s)	5.0	5.0	6.0	6.0	6.0	5.0
Vehicle Extension (s)	2.0	2.0	2.0	2.0	2.0	2.0
Lane Grp Cap (vph)	190	170	84	1507	1398	1359
v/s Ratio Prot	c0.07	0.00	0.00	c0.15	c0.68	0.02
v/s Ratio Perm			0.10			0.13
v/c Ratio	0.66	0.01	0.13	0.19	0.92	0.17
Uniform Delay, d1	51.5	48.0	26.9	2.8	12.4	1.6
Progression Factor	1.00	1.00	1.00	1.00	1.38	1.08
Incremental Delay, d2	6.6	0.0	0.3	0.3	5.3	0.0
Delay (s)	58.1	48.0	27.2	3.0	22.3	1.7
Level of Service	E	D	C	A	C	A
Approach Delay (s)	56.6			4.0	18.9	
Approach LOS	E			A	B	

Intersection Summary			
HCM 2000 Control Delay	19.6	HCM 2000 Level of Service	B
HCM 2000 Volume to Capacity ratio	0.91		
Actuated Cycle Length (s)	120.0	Sum of lost time (s)	20.0
Intersection Capacity Utilization	76.9%	ICU Level of Service	D
Analysis Period (min)	15		
c Critical Lane Group			

Intersection	
Int Delay, s/veh	6.5

Movement	EBL	EBT	EBR	WBL	WBT	WBR	NBL	NBT	NBR	SBL	SBT	SBR
Lane Configurations												
Traffic Vol, veh/h	0	0	0	170	0	15	20	240	0	0	475	640
Future Vol, veh/h	0	0	0	170	0	15	20	240	0	0	475	640
Conflicting Peds, #/hr	0	0	0	0	0	0	0	0	0	0	0	0
Sign Control	Stop	Stop	Stop	Stop	Stop	Stop	Free	Free	Free	Free	Free	Free
RT Channelized	-	-	None	-	-	None	-	-	None	-	-	None
Storage Length	-	-	-	-	-	500	175	-	-	-	-	375
Veh in Median Storage, #	-	1	-	-	0	-	-	0	-	-	0	-
Grade, %	-	0	-	-	0	-	-	0	-	-	0	-
Peak Hour Factor	98	98	98	98	98	98	98	98	98	98	98	98
Heavy Vehicles, %	0	0	0	1	1	1	1	1	1	1	1	1
Mvmt Flow	0	0	0	173	0	15	20	245	0	0	485	653

Major/Minor	Minor1			Major1			Major2		
Conflicting Flow All	1097	1423	245	1138	0	-	-	-	0
Stage 1	285	285	-	-	-	-	-	-	-
Stage 2	812	1138	-	-	-	-	-	-	-
Critical Hdwy	6.41	6.51	6.21	4.11	-	-	-	-	-
Critical Hdwy Stg 1	5.41	5.51	-	-	-	-	-	-	-
Critical Hdwy Stg 2	5.41	5.51	-	-	-	-	-	-	-
Follow-up Hdwy	3.509	4.009	3.309	2.209	-	-	-	-	-
Pot Cap-1 Maneuver	237	137	796	618	-	0	0	-	-
Stage 1	766	678	-	-	-	0	0	-	-
Stage 2	438	278	-	-	-	0	0	-	-
Platoon blocked, %					-			-	-
Mov Cap-1 Maneuver	229	0	796	618	-	-	-	-	-
Mov Cap-2 Maneuver	229	0	-	-	-	-	-	-	-
Stage 1	741	0	-	-	-	-	-	-	-
Stage 2	438	0	-	-	-	-	-	-	-

Approach	WB	NB	SB
HCM Control Delay, s	53.6	0.8	0
HCM LOS	F		

Minor Lane/Major Mvmt	NBL	NBT	WBLn1	WBLn2	SBT	SBR
Capacity (veh/h)	618	-	229	796	-	-
HCM Lane V/C Ratio	0.033	-	0.758	0.019	-	-
HCM Control Delay (s)	11	-	57.5	9.6	-	-
HCM Lane LOS	B	-	F	A	-	-
HCM 95th %tile Q(veh)	0.1	-	5.3	0.1	-	-

Movement	EBL	EBR	NBL	NBT	SBT	SBR
Lane Configurations						
Traffic Volume (veh/h)	145	20	30	115	650	15
Future Volume (veh/h)	145	20	30	115	650	15
Initial Q (Qb), veh	0	0	0	0	0	0
Ped-Bike Adj(A_pbT)	1.00	1.00	1.00			1.00
Parking Bus, Adj	1.00	1.00	1.00	1.00	1.00	1.00
Work Zone On Approach	No			No	No	
Adj Sat Flow, veh/h/ln	1885	1885	1885	1885	1900	1900
Adj Flow Rate, veh/h	151	21	31	120	677	16
Peak Hour Factor	0.96	0.96	0.96	0.96	0.96	0.96
Percent Heavy Veh, %	1	1	1	1	0	0
Cap, veh/h	258	230	192	668	1030	24
Arrive On Green	0.14	0.14	0.56	0.56	0.56	0.56
Sat Flow, veh/h	1795	1598	160	1200	1848	44
Grp Volume(v), veh/h	151	21	151	0	0	693
Grp Sat Flow(s),veh/h/ln	1795	1598	1360	0	0	1892
Q Serve(g_s), s	3.3	0.5	0.4	0.0	0.0	10.8
Cycle Q Clear(g_c), s	3.3	0.5	11.2	0.0	0.0	10.8
Prop In Lane	1.00	1.00	0.21			0.02
Lane Grp Cap(c), veh/h	258	230	860	0	0	1054
V/C Ratio(X)	0.58	0.09	0.18	0.00	0.00	0.66
Avail Cap(c_a), veh/h	1436	1278	869	0	0	1963
HCM Platoon Ratio	1.00	1.00	1.00	1.00	1.00	1.00
Upstream Filter(I)	1.00	1.00	1.00	0.00	0.00	1.00
Uniform Delay (d), s/veh	16.9	15.6	4.7	0.0	0.0	6.5
Incr Delay (d2), s/veh	2.1	0.2	0.2	0.0	0.0	1.5
Initial Q Delay(d3),s/veh	0.0	0.0	0.0	0.0	0.0	0.0
%ile BackOfQ(50%),veh/ln	1.3	0.2	0.4	0.0	0.0	2.9
Unsig. Movement Delay, s/veh						
LnGrp Delay(d),s/veh	18.9	15.8	4.9	0.0	0.0	8.0
LnGrp LOS	B	B	A	A	A	A
Approach Vol, veh/h	172			151	693	
Approach Delay, s/veh	18.6			4.9	8.0	
Approach LOS	B			A	A	

Timer - Assigned Phs		2		4		6
Phs Duration (G+Y+Rc), s		29.8		12.4		29.8
Change Period (Y+Rc), s		6.3		6.3		6.3
Max Green Setting (Gmax), s		23.7		33.7		43.7
Max Q Clear Time (g_c+I1), s		13.2		5.3		12.8
Green Ext Time (p_c), s		1.0		0.5		10.7

Intersection Summary	
HCM 6th Ctrl Delay	9.3
HCM 6th LOS	A

Movement	EBL	EBT	EBR	WBL	WBT	WBR	NBL	NBT	NBR	SBL	SBT	SBR
Lane Configurations												
Traffic Volume (veh/h)	80	5	20	10	5	5	35	455	5	5	1170	280
Future Volume (veh/h)	80	5	20	10	5	5	35	455	5	5	1170	280
Initial Q (Qb), veh	0	0	0	0	0	0	0	0	0	0	0	0
Ped-Bike Adj(A_pbT)	1.00		1.00	1.00		1.00	1.00		1.00	1.00		1.00
Parking Bus, Adj	1.00	1.00	1.00	1.00	1.00	1.00	1.00	1.00	1.00	1.00	1.00	1.00
Work Zone On Approach		No			No			No			No	
Adj Sat Flow, veh/h/ln	1885	1885	1885	1900	1900	1900	1826	1826	1826	1856	1856	1856
Adj Flow Rate, veh/h	85	5	21	11	5	5	37	484	5	5	1245	298
Peak Hour Factor	0.94	0.94	0.94	0.94	0.94	0.94	0.94	0.94	0.94	0.94	0.94	0.94
Percent Heavy Veh, %	1	1	1	0	0	0	5	5	5	3	3	3
Cap, veh/h	144	6	24	213	117	117	120	1307	13	618	1321	1119
Arrive On Green	0.09	0.09	0.09	0.01	0.13	0.13	0.02	0.72	0.72	0.00	0.71	0.71
Sat Flow, veh/h	1121	66	277	1810	872	872	1739	1804	19	1767	1856	1572
Grp Volume(v), veh/h	111	0	0	11	0	10	37	0	489	5	1245	298
Grp Sat Flow(s),veh/h/ln	1464	0	0	1810	0	1743	1739	0	1823	1767	1856	1572
Q Serve(g_s), s	10.6	0.0	0.0	0.8	0.0	0.7	0.8	0.0	14.3	0.1	83.3	9.6
Cycle Q Clear(g_c), s	10.6	0.0	0.0	0.8	0.0	0.7	0.8	0.0	14.3	0.1	83.3	9.6
Prop In Lane	0.77		0.19	1.00		0.50	1.00		0.01	1.00		1.00
Lane Grp Cap(c), veh/h	174	0	0	213	0	234	120	0	1320	618	1321	1119
V/C Ratio(X)	0.64	0.00	0.00	0.05	0.00	0.04	0.31	0.00	0.37	0.01	0.94	0.27
Avail Cap(c_a), veh/h	175	0	0	270	0	302	141	0	1322	662	1346	1141
HCM Platoon Ratio	1.00	1.00	1.00	1.00	1.00	1.00	1.00	1.00	1.00	1.00	1.00	1.00
Upstream Filter(I)	1.00	0.00	0.00	1.00	0.00	1.00	1.00	0.00	1.00	1.00	1.00	1.00
Uniform Delay (d), s/veh	63.8	0.0	0.0	56.5	0.0	53.4	32.9	0.0	7.4	6.3	17.9	7.3
Incr Delay (d2), s/veh	8.6	0.0	0.0	0.1	0.0	0.1	1.4	0.0	0.4	0.0	13.5	0.3
Initial Q Delay(d3),s/veh	0.0	0.0	0.0	0.0	0.0	0.0	0.0	0.0	0.0	0.0	0.0	0.0
%ile BackOfQ(50%),veh/ln	4.4	0.0	0.0	0.4	0.0	0.3	0.9	0.0	5.5	0.0	37.0	3.2
Unsig. Movement Delay, s/veh												
LnGrp Delay(d),s/veh	72.4	0.0	0.0	56.6	0.0	53.5	34.4	0.0	7.7	6.3	31.4	7.5
LnGrp LOS	E	A	A	E	A	D	C	A	A	A	C	A
Approach Vol, veh/h		111			21			526			1548	
Approach Delay, s/veh		72.4			55.2			9.6			26.7	
Approach LOS		E			E			A			C	

Timer - Assigned Phs	1	2	3	4	5	6		8
Phs Duration (G+Y+Rc), s	6.0	109.8	6.6	19.4	7.8	108.1		26.0
Change Period (Y+Rc), s	5.5	7.1	5.5	6.9	5.5	7.1		* 6.9
Max Green Setting (Gmax), s	4.0	102.9	5.5	12.6	4.0	102.9		* 25
Max Q Clear Time (g_c+I1), s	2.1	16.3	2.8	12.6	2.8	85.3		2.7
Green Ext Time (p_c), s	0.0	7.8	0.0	0.0	0.0	15.6		0.0

Intersection Summary	
HCM 6th Ctrl Delay	25.2
HCM 6th LOS	C

Notes

* HCM 6th computational engine requires equal clearance times for the phases crossing the barrier.

Movement	EBL	EBT	EBR	WBL	WBT	WBR	NBL	NBT	NBR	SBL	SBT	SBR
Lane Configurations												
Traffic Volume (veh/h)	430	1080	105	5	385	140	80	65	30	525	80	655
Future Volume (veh/h)	430	1080	105	5	385	140	80	65	30	525	80	655
Initial Q (Qb), veh	0	0	0	0	0	0	0	0	0	0	0	0
Ped-Bike Adj(A_pbT)	1.00		1.00	1.00		1.00	1.00		0.99	1.00		0.99
Parking Bus, Adj	1.00	1.00	1.00	1.00	1.00	1.00	1.00	1.00	1.00	1.00	1.00	1.00
Work Zone On Approach		No			No			No			No	
Adj Sat Flow, veh/h/ln	1870	1870	1870	1856	1856	1856	1900	1900	1900	1870	1870	1870
Adj Flow Rate, veh/h	448	1125	109	5	401	146	83	68	31	547	83	682
Peak Hour Factor	0.96	0.96	0.96	0.96	0.96	0.96	0.96	0.96	0.96	0.96	0.96	0.96
Percent Heavy Veh, %	2	2	2	3	3	3	0	0	0	2	2	2
Cap, veh/h	465	1406	626	11	495	220	103	253	115	489	792	1080
Arrive On Green	0.26	0.40	0.40	0.01	0.14	0.14	0.06	0.21	0.21	0.27	0.42	0.42
Sat Flow, veh/h	1781	3554	1583	1767	3526	1567	1810	1229	560	1781	1870	1574
Grp Volume(v), veh/h	448	1125	109	5	401	146	83	0	99	547	83	682
Grp Sat Flow(s),veh/h/ln	1781	1777	1583	1767	1763	1567	1810	0	1789	1781	1870	1574
Q Serve(g_s), s	43.4	49.0	7.8	0.5	19.3	15.5	7.9	0.0	8.1	48.0	4.7	42.2
Cycle Q Clear(g_c), s	43.4	49.0	7.8	0.5	19.3	15.5	7.9	0.0	8.1	48.0	4.7	42.2
Prop In Lane	1.00		1.00	1.00		1.00	1.00		0.31	1.00		1.00
Lane Grp Cap(c), veh/h	465	1406	626	11	495	220	103	0	368	489	792	1080
V/C Ratio(X)	0.96	0.80	0.17	0.46	0.81	0.66	0.81	0.00	0.27	1.12	0.10	0.63
Avail Cap(c_a), veh/h	478	1427	636	50	584	260	289	0	368	489	792	1080
HCM Platoon Ratio	1.00	1.00	1.00	1.00	1.00	1.00	1.00	1.00	1.00	1.00	1.00	1.00
Upstream Filter(I)	1.00	1.00	1.00	1.00	1.00	1.00	1.00	0.00	1.00	1.00	1.00	1.00
Uniform Delay (d), s/veh	63.8	46.8	34.3	86.7	72.9	71.3	81.6	0.0	58.4	63.5	30.5	15.4
Incr Delay (d2), s/veh	31.4	3.8	0.3	27.2	9.2	8.1	13.9	0.0	1.8	77.7	0.3	2.8
Initial Q Delay(d3),s/veh	0.0	0.0	0.0	0.0	0.0	0.0	0.0	0.0	0.0	0.0	0.0	0.0
%ile BackOfQ(50%),veh/ln	23.8	22.5	3.1	0.3	9.4	6.8	4.1	0.0	3.9	32.4	2.2	15.8
Unsig. Movement Delay, s/veh												
LnGrp Delay(d),s/veh	95.2	50.6	34.6	113.9	82.2	79.4	95.5	0.0	60.2	141.2	30.7	18.2
LnGrp LOS	F	D	C	F	F	E	F	A	E	F	C	B
Approach Vol, veh/h		1682			552			182			1312	
Approach Delay, s/veh		61.4			81.7			76.3			70.3	
Approach LOS		E			F			E			E	

Timer - Assigned Phs	1	2	3	4	5	6	7	8
Phs Duration (G+Y+Rc), s	6.1	74.9	14.9	79.1	50.7	30.3	53.0	41.0
Change Period (Y+Rc), s	5.0	5.7	5.0	5.0	5.0	* 5.7	5.0	5.0
Max Green Setting (Gmax), s	5.0	70.3	28.0	56.0	47.0	* 29	48.0	36.0
Max Q Clear Time (g_c+I1), s	2.5	51.0	9.9	44.2	45.4	21.3	50.0	10.1
Green Ext Time (p_c), s	0.0	13.2	0.2	2.7	0.3	3.1	0.0	0.5

Intersection Summary	
HCM 6th Ctrl Delay	68.3
HCM 6th LOS	E

Notes

User approved pedestrian interval to be less than phase max green.

* HCM 6th computational engine requires equal clearance times for the phases crossing the barrier.

User approved changes to right turn type.

Movement	EBT	EBR	WBL	WBT	NBL	NBR
Lane Configurations						
Traffic Volume (veh/h)	1251	1130	500	620	365	364
Future Volume (veh/h)	1251	1130	500	620	365	364
Initial Q (Qb), veh	0	0	0	0	0	0
Ped-Bike Adj(A_pbT)		1.00	1.00		1.00	1.00
Parking Bus, Adj	1.00	1.00	1.00	1.00	1.00	1.00
Work Zone On Approach	No			No	No	
Adj Sat Flow, veh/h/ln	1885	1885	1870	1870	1885	1885
Adj Flow Rate, veh/h	1290	0	515	639	376	375
Peak Hour Factor	0.97	0.97	0.97	0.97	0.97	0.97
Percent Heavy Veh, %	1	1	2	2	1	1
Cap, veh/h	1566		518	2739	527	706
Arrive On Green	0.44	0.00	0.29	0.77	0.15	0.15
Sat Flow, veh/h	3676	1598	1781	3647	3483	1598
Grp Volume(v), veh/h	1290	0	515	639	376	375
Grp Sat Flow(s),veh/h/ln	1791	1598	1781	1777	1742	1598
Q Serve(g_s), s	47.5	0.0	43.3	7.5	15.4	22.7
Cycle Q Clear(g_c), s	47.5	0.0	43.3	7.5	15.4	22.7
Prop In Lane		1.00	1.00		1.00	1.00
Lane Grp Cap(c), veh/h	1566		518	2739	527	706
V/C Ratio(X)	0.82		0.99	0.23	0.71	0.53
Avail Cap(c_a), veh/h	1566		518	2739	527	706
HCM Platoon Ratio	1.00	1.00	1.00	1.00	1.00	1.00
Upstream Filter(I)	1.00	0.00	0.87	0.87	1.00	1.00
Uniform Delay (d), s/veh	37.1	0.0	53.1	4.8	60.6	30.5
Incr Delay (d2), s/veh	5.0	0.0	35.5	0.2	4.9	1.0
Initial Q Delay(d3),s/veh	0.0	0.0	0.0	0.0	0.0	0.0
%ile BackOfQ(50%),veh/ln	21.8	0.0	24.4	2.7	7.2	10.2
Unsig. Movement Delay, s/veh						
LnGrp Delay(d),s/veh	42.2	0.0	88.6	5.0	65.5	31.5
LnGrp LOS	D		F	A	E	C
Approach Vol, veh/h	1290	A		1154	751	
Approach Delay, s/veh	42.2			42.3	48.5	
Approach LOS	D			D	D	

Timer - Assigned Phs	1	2				6	8
Phs Duration (G+Y+Rc), s	50.0	72.0				122.0	28.0
Change Period (Y+Rc), s	6.4	6.4				6.4	5.3
Max Green Setting (Gmax), s	43.6	65.6				115.6	22.7
Max Q Clear Time (g_c+I1), s	45.3	49.5				9.5	24.7
Green Ext Time (p_c), s	0.0	12.2				10.9	0.0

Intersection Summary	
HCM 6th Ctrl Delay	43.7
HCM 6th LOS	D

Notes

User approved pedestrian interval to be less than phase max green.

Unsignalized Delay for [EBR] is excluded from calculations of the approach delay and intersection delay.

Movement	EBL	EBT	EBR	WBL	WBT	WBR	NBL	NBT	NBR	SBL	SBT	SBR
Lane Configurations												
Traffic Volume (vph)	80	1400	0	0	830	285	0	0	640	0	0	630
Future Volume (vph)	80	1400	0	0	830	285	0	0	640	0	0	630
Ideal Flow (vphpl)	1900	1900	1900	1900	1900	1900	1900	1900	1900	1900	1900	1900
Total Lost time (s)	5.0	5.0			5.0	5.0			4.0			5.0
Lane Util. Factor	1.00	0.95			0.91	1.00			1.00			1.00
Frt	1.00	1.00			1.00	0.85			0.86			0.86
Flt Protected	0.95	1.00			1.00	1.00			1.00			1.00
Satd. Flow (prot)	1770	3539			5085	1583			1627			1611
Flt Permitted	0.95	1.00			1.00	1.00			1.00			1.00
Satd. Flow (perm)	1770	3539			5085	1583			1627			1611
Peak-hour factor, PHF	0.97	0.97	0.97	0.97	0.97	0.97	0.97	0.97	0.97	0.97	0.97	0.97
Adj. Flow (vph)	82	1443	0	0	856	294	0	0	660	0	0	649
RTOR Reduction (vph)	0	0	0	0	0	143	0	0	0	0	0	55
Lane Group Flow (vph)	82	1443	0	0	856	151	0	0	660	0	0	594
Heavy Vehicles (%)	2%	2%	2%	2%	2%	2%	1%	1%	1%	2%	2%	2%
Turn Type	Prot	NA			NA	custom			Free			Prot
Protected Phases	3	6 8			6	1						8
Permitted Phases						6			Free			8
Actuated Green, G (s)	58.1	140.0			71.9	71.9			140.0			58.1
Effective Green, g (s)	58.1	140.0			71.9	71.9			140.0			58.1
Actuated g/C Ratio	0.42	1.00			0.51	0.51			1.00			0.42
Clearance Time (s)	5.0				5.0	5.0						5.0
Vehicle Extension (s)	2.0				2.0	2.0						2.0
Lane Grp Cap (vph)	734	3539			2611	812			1627			668
v/s Ratio Prot	0.05	c0.41			0.17	0.10						c0.37
v/s Ratio Perm									0.41			
v/c Ratio	0.11	0.41			0.33	0.19			0.41			0.89
Uniform Delay, d1	25.1	0.0			19.9	18.3			0.0			38.0
Progression Factor	0.69	1.00			1.00	1.00			1.00			1.00
Incremental Delay, d2	0.0	0.0			0.3	0.5			0.8			13.4
Delay (s)	17.3	0.0			20.3	18.8			0.8			51.3
Level of Service	B	A			C	B			A			D
Approach Delay (s)		0.9			19.9			0.8			51.3	
Approach LOS		A			B			A			D	

Intersection Summary			
HCM 2000 Control Delay	14.6	HCM 2000 Level of Service	B
HCM 2000 Volume to Capacity ratio	0.65		
Actuated Cycle Length (s)	140.0	Sum of lost time (s)	13.0
Intersection Capacity Utilization	63.4%	ICU Level of Service	B
Analysis Period (min)	15		
c Critical Lane Group			

Movement	EBL	EBT	EBR	WBL	WBT	WBR	NBL	NBT	NBR	SBL	SBT	SBR
Lane Configurations												
Traffic Volume (vph)	640	470	70	315	235	905	0	0	0	1000	955	530
Future Volume (vph)	640	470	70	315	235	905	0	0	0	1000	955	530
Ideal Flow (vphpl)	1900	1900	1900	1900	1900	1900	1900	1900	1900	1900	1900	1900
Total Lost time (s)	5.0	5.0		9.0	9.0	4.0				5.0	5.0	5.0
Lane Util. Factor	0.97	0.95		1.00	0.95	1.00				0.97	0.95	0.95
Frt	1.00	0.98		1.00	1.00	0.85				1.00	1.00	0.85
Flt Protected	0.95	1.00		0.95	1.00	1.00				0.95	1.00	1.00
Satd. Flow (prot)	3467	3505		1770	3539	1583				3433	1770	1504
Flt Permitted	0.95	1.00		0.95	1.00	1.00				0.95	1.00	1.00
Satd. Flow (perm)	3467	3505		1770	3539	1583				3433	1770	1504
Peak-hour factor, PHF	0.98	0.98	0.98	0.98	0.98	0.98	0.98	0.98	0.98	0.98	0.98	0.98
Adj. Flow (vph)	653	480	71	321	240	923	0	0	0	1020	974	541
RTOR Reduction (vph)	0	8	0	0	0	9	0	0	0	0	0	0
Lane Group Flow (vph)	653	543	0	321	240	914	0	0	0	1020	974	541
Heavy Vehicles (%)	1%	1%	1%	2%	2%	2%	0%	0%	0%	2%	2%	2%
Turn Type	Split	NA		Split	NA	custom				Split	NA	custom
Protected Phases	2	2		3	3	7				4	4	4 5
Permitted Phases						7						
Actuated Green, G (s)	32.3	32.3		26.8	26.8	98.7				61.9	61.9	99.2
Effective Green, g (s)	32.3	32.3		26.8	26.8	98.7				61.9	61.9	99.2
Actuated g/C Ratio	0.23	0.23		0.19	0.19	0.71				0.44	0.44	0.71
Clearance Time (s)	5.0	5.0		9.0	9.0	4.0				5.0	5.0	
Vehicle Extension (s)	4.0	4.0		3.0	3.0	3.0				3.0	3.0	
Lane Grp Cap (vph)	799	808		338	677	1116				1517	782	1065
v/s Ratio Prot	c0.19	0.15		0.18	0.07	c0.58				0.30	c0.55	0.36
v/s Ratio Perm												
v/c Ratio	0.82	0.67		0.95	0.35	0.82				0.67	1.25	0.51
Uniform Delay, d1	51.1	49.0		55.9	49.1	14.4				31.0	39.0	9.3
Progression Factor	1.00	1.00		0.96	1.01	1.32				1.00	1.00	1.00
Incremental Delay, d2	6.8	2.4		32.1	0.3	5.8				2.4	121.1	0.5
Delay (s)	57.9	51.4		86.0	49.9	24.9				33.4	160.2	9.8
Level of Service	E	D		F	D	C				C	F	A
Approach Delay (s)		54.9			42.1			0.0			77.1	
Approach LOS		D			D			A			E	

Intersection Summary			
HCM 2000 Control Delay	62.0	HCM 2000 Level of Service	E
HCM 2000 Volume to Capacity ratio	1.08		
Actuated Cycle Length (s)	140.0	Sum of lost time (s)	19.0
Intersection Capacity Utilization	109.5%	ICU Level of Service	H
Analysis Period (min)	15		
c Critical Lane Group			

Movement	EBL	EBT	EBR	WBL	WBT	WBR	NBL	NBT	NBR	SBL	SBT	SBR
Lane Configurations												
Traffic Volume (veh/h)	290	600	420	865	205	170	45	510	995	195	1175	125
Future Volume (veh/h)	290	600	420	865	205	170	45	510	995	195	1175	125
Initial Q (Qb), veh	0	0	0	0	0	0	0	0	0	0	0	0
Ped-Bike Adj(A_pbT)	1.00		1.00	1.00		1.00	1.00		1.00	1.00		1.00
Parking Bus, Adj	1.00	1.00	1.00	1.00	1.00	1.00	1.00	1.00	1.00	1.00	1.00	1.00
Work Zone On Approach		No			No			No			No	
Adj Sat Flow, veh/h/ln	1885	1885	1885	1870	1870	1870	1885	1885	1885	1885	1885	1885
Adj Flow Rate, veh/h	296	612	0	806	317	0	46	520	0	199	1199	0
Peak Hour Factor	0.98	0.98	0.98	0.98	0.98	0.98	0.98	0.98	0.98	0.98	0.98	0.98
Percent Heavy Veh, %	1	1	1	2	2	2	1	1	1	1	1	1
Cap, veh/h	314	660		1099	577		60	1029		269	1672	
Arrive On Green	0.17	0.17	0.00	0.10	0.10	0.00	0.03	0.20	0.00	0.15	0.32	0.00
Sat Flow, veh/h	1795	3770	1598	3563	1870	1585	1795	5147	1598	1795	5147	1598
Grp Volume(v), veh/h	296	612	0	806	317	0	46	520	0	199	1199	0
Grp Sat Flow(s),veh/h/ln	1795	1885	1598	1781	1870	1585	1795	1716	1598	1795	1716	1598
Q Serve(g_s), s	19.5	19.2	0.0	26.4	19.4	0.0	3.1	10.8	0.0	12.7	24.6	0.0
Cycle Q Clear(g_c), s	19.5	19.2	0.0	26.4	19.4	0.0	3.1	10.8	0.0	12.7	24.6	0.0
Prop In Lane	1.00		1.00	1.00		1.00	1.00		1.00	1.00		1.00
Lane Grp Cap(c), veh/h	314	660		1099	577		60	1029		269	1672	
V/C Ratio(X)	0.94	0.93		0.73	0.55		0.77	0.51		0.74	0.72	
Avail Cap(c_a), veh/h	314	660		1128	592		135	1029		269	1672	
HCM Platoon Ratio	1.00	1.00	1.00	0.33	0.33	0.33	1.00	1.00	1.00	1.00	1.00	1.00
Upstream Filter(I)	1.00	1.00	0.00	0.84	0.84	0.00	0.47	0.47	0.00	1.00	1.00	0.00
Uniform Delay (d), s/veh	48.9	48.8	0.0	49.1	46.0	0.0	57.6	42.7	0.0	48.8	35.6	0.0
Incr Delay (d2), s/veh	37.9	21.2	0.0	3.2	2.5	0.0	13.0	0.8	0.0	11.1	2.7	0.0
Initial Q Delay(d3),s/veh	0.0	0.0	0.0	0.0	0.0	0.0	0.0	0.0	0.0	0.0	0.0	0.0
%ile BackOfQ(50%),veh/ln	12.0	10.8	0.0	13.1	10.1	0.0	1.6	4.7	0.0	6.5	10.6	0.0
Unsig. Movement Delay, s/veh												
LnGrp Delay(d),s/veh	86.8	69.9	0.0	52.3	48.5	0.0	70.6	43.6	0.0	59.9	38.3	0.0
LnGrp LOS	F	E		D	D		E	D		E	D	
Approach Vol, veh/h		908	A		1123	A		566	A		1398	A
Approach Delay, s/veh		75.4			51.2			45.7			41.4	
Approach LOS		E			D			D			D	

Timer - Assigned Phs		2	3	4		6	7	8				
Phs Duration (G+Y+Rc), s		42.0	8.0	44.0		26.0	23.0	29.0				
Change Period (Y+Rc), s		5.0	4.0	5.0		5.0	5.0	* 5				
Max Green Setting (Gmax), s		38.0	9.0	33.0		21.0	18.0	* 24				
Max Q Clear Time (g_c+I1), s		28.4	5.1	26.6		21.5	14.7	12.8				
Green Ext Time (p_c), s		8.7	0.0	5.6		0.0	0.3	4.4				

Intersection Summary	
HCM 6th Ctrl Delay	52.5
HCM 6th LOS	D

Notes

User approved volume balancing among the lanes for turning movement.
* HCM 6th computational engine requires equal clearance times for the phases crossing the barrier.
User approved changes to right turn type.

Movement	EBL	EBT	EBR	WBL	WBT	WBR	NBL	NBT	NBR	SBL	SBT	SBR
Lane Configurations												
Traffic Volume (veh/h)	125	1635	25	5	1125	5	20	5	5	10	5	100
Future Volume (veh/h)	125	1635	25	5	1125	5	20	5	5	10	5	100
Initial Q (Qb), veh	0	0	0	0	0	0	0	0	0	0	0	0
Ped-Bike Adj(A_pbT)	1.00		1.00	1.00		1.00	1.00		1.00	1.00		1.00
Parking Bus, Adj	1.00	1.00	1.00	1.00	1.00	1.00	1.00	1.00	1.00	1.00	1.00	1.00
Work Zone On Approach		No			No			No			No	
Adj Sat Flow, veh/h/ln	1885	1885	1885	1870	1870	1870	1900	1900	1900	1870	1870	1870
Adj Flow Rate, veh/h	132	1721	26	5	1184	5	21	5	5	11	5	105
Peak Hour Factor	0.95	0.95	0.95	0.95	0.95	0.95	0.95	0.95	0.95	0.95	0.95	0.95
Percent Heavy Veh, %	1	1	1	2	2	2	0	0	0	2	2	2
Cap, veh/h	161	2853	43	11	2565	11	163	76	76	134	52	137
Arrive On Green	0.12	1.00	1.00	0.01	0.71	0.71	0.09	0.09	0.09	0.09	0.09	0.09
Sat Flow, veh/h	1795	3612	54	1781	3629	15	1300	870	870	954	596	1580
Grp Volume(v), veh/h	132	852	895	5	580	609	21	0	10	16	0	105
Grp Sat Flow(s),veh/h/ln	1795	1791	1875	1781	1777	1868	1300	0	1740	1550	0	1580
Q Serve(g_s), s	8.6	0.0	0.0	0.3	17.0	17.0	1.8	0.0	0.6	0.0	0.0	7.8
Cycle Q Clear(g_c), s	8.6	0.0	0.0	0.3	17.0	17.0	2.8	0.0	0.6	1.0	0.0	7.8
Prop In Lane	1.00		0.03	1.00		0.01	1.00		0.50	0.69		1.00
Lane Grp Cap(c), veh/h	161	1415	1481	11	1256	1320	163	0	151	185	0	137
V/C Ratio(X)	0.82	0.60	0.60	0.44	0.46	0.46	0.13	0.00	0.07	0.09	0.00	0.76
Avail Cap(c_a), veh/h	314	1415	1481	134	1256	1320	266	0	290	307	0	263
HCM Platoon Ratio	1.33	1.33	1.33	1.00	1.00	1.00	1.00	1.00	1.00	1.00	1.00	1.00
Upstream Filter(I)	0.09	0.09	0.09	1.00	1.00	1.00	1.00	0.00	1.00	1.00	0.00	1.00
Uniform Delay (d), s/veh	51.9	0.0	0.0	59.4	7.7	7.7	51.7	0.0	50.3	50.5	0.0	53.6
Incr Delay (d2), s/veh	1.0	0.2	0.2	24.3	1.2	1.2	0.5	0.0	0.3	0.3	0.0	11.8
Initial Q Delay(d3),s/veh	0.0	0.0	0.0	0.0	0.0	0.0	0.0	0.0	0.0	0.0	0.0	0.0
%ile BackOfQ(50%),veh/ln	3.8	0.1	0.1	0.2	6.2	6.5	0.6	0.0	0.3	0.5	0.0	3.6
Unsig. Movement Delay, s/veh												
LnGrp Delay(d),s/veh	52.9	0.2	0.2	83.7	8.9	8.8	52.2	0.0	50.6	50.7	0.0	65.4
LnGrp LOS	D	A	A	F	A	A	D	A	D	D	A	E
Approach Vol, veh/h		1879			1194			31			121	
Approach Delay, s/veh		3.9			9.2			51.7			63.4	
Approach LOS		A			A			D			E	

Timer - Assigned Phs	1	2		4	5	6		8
Phs Duration (G+Y+Rc), s	14.8	89.8		15.4	4.8	99.8		15.4
Change Period (Y+Rc), s	4.0	5.0		5.0	4.0	5.0		5.0
Max Green Setting (Gmax), s	21.0	65.0		20.0	9.0	77.0		20.0
Max Q Clear Time (g_c+I1), s	10.6	19.0		9.8	2.3	2.0		4.8
Green Ext Time (p_c), s	0.3	40.3		0.4	0.0	57.4		0.1

Intersection Summary	
HCM 6th Ctrl Delay	8.5
HCM 6th LOS	A

Movement	EBL	EBT	EBR	WBL	WBT	WBR	NBL	NBT	NBR	SBL	SBT	SBR
Lane Configurations												
Traffic Volume (veh/h)	20	1455	180	65	1015	15	100	15	45	10	20	20
Future Volume (veh/h)	20	1455	180	65	1015	15	100	15	45	10	20	20
Initial Q (Qb), veh	0	0	0	0	0	0	0	0	0	0	0	0
Ped-Bike Adj(A_pbT)	1.00		1.00	1.00		1.00	1.00		0.98	1.00		0.96
Parking Bus, Adj	1.00	1.00	1.00	1.00	1.00	1.00	1.00	1.00	1.00	1.00	1.00	1.00
Work Zone On Approach		No			No			No			No	
Adj Sat Flow, veh/h/ln	1885	1885	1885	1870	1870	1870	1900	1900	1900	1870	1870	1870
Adj Flow Rate, veh/h	21	1532	189	68	1068	16	105	16	47	11	21	21
Peak Hour Factor	0.95	0.95	0.95	0.95	0.95	0.95	0.95	0.95	0.95	0.95	0.95	0.95
Percent Heavy Veh, %	1	1	1	2	2	2	0	0	0	2	2	2
Cap, veh/h	521	2165	264	88	1523	23	150	35	102	63	30	30
Arrive On Green	0.29	0.67	0.67	0.02	0.14	0.14	0.08	0.08	0.08	0.04	0.04	0.04
Sat Flow, veh/h	1795	3213	392	1781	3584	54	1810	419	1232	1781	841	841
Grp Volume(v), veh/h	21	845	876	68	530	554	105	0	63	11	0	42
Grp Sat Flow(s),veh/h/ln	1795	1791	1814	1781	1777	1861	1810	0	1651	1781	0	1682
Q Serve(g_s), s	1.0	35.0	36.5	4.6	34.1	34.1	6.8	0.0	4.4	0.7	0.0	3.0
Cycle Q Clear(g_c), s	1.0	35.0	36.5	4.6	34.1	34.1	6.8	0.0	4.4	0.7	0.0	3.0
Prop In Lane	1.00		0.22	1.00		0.03	1.00		0.75	1.00		0.50
Lane Grp Cap(c), veh/h	521	1207	1222	88	755	791	150	0	137	63	0	59
V/C Ratio(X)	0.04	0.70	0.72	0.77	0.70	0.70	0.70	0.00	0.46	0.18	0.00	0.71
Avail Cap(c_a), veh/h	521	1207	1222	208	755	791	271	0	248	267	0	252
HCM Platoon Ratio	1.00	1.00	1.00	0.33	0.33	0.33	1.00	1.00	1.00	1.00	1.00	1.00
Upstream Filter(I)	1.00	1.00	1.00	0.89	0.89	0.89	1.00	0.00	1.00	1.00	0.00	1.00
Uniform Delay (d), s/veh	30.6	12.1	12.3	58.3	44.3	44.3	53.6	0.0	52.5	56.2	0.0	57.3
Incr Delay (d2), s/veh	0.0	3.4	3.6	11.8	4.8	4.6	8.1	0.0	3.4	1.9	0.0	19.8
Initial Q Delay(d3),s/veh	0.0	0.0	0.0	0.0	0.0	0.0	0.0	0.0	0.0	0.0	0.0	0.0
%ile BackOfQ(50%),veh/ln	0.4	13.6	14.4	2.4	17.2	18.0	3.4	0.0	1.9	0.4	0.0	1.6
Unsig. Movement Delay, s/veh												
LnGrp Delay(d),s/veh	30.6	15.5	16.0	70.2	49.1	48.9	61.6	0.0	55.8	58.1	0.0	77.1
LnGrp LOS	C	B	B	E	D	D	E	A	E	E	A	E
Approach Vol, veh/h		1742			1152			168			53	
Approach Delay, s/veh		15.9			50.3			59.5			73.1	
Approach LOS		B			D			E			E	

Timer - Assigned Phs	1	2		4	5	6		8
Phs Duration (G+Y+Rc), s	39.8	56.0		15.0	9.9	85.9		9.2
Change Period (Y+Rc), s	5.0	* 5		5.0	4.0	5.0		5.0
Max Green Setting (Gmax), s	14.0	* 51		18.0	14.0	51.0		18.0
Max Q Clear Time (g_c+I1), s	3.0	36.1		8.8	6.6	38.5		5.0
Green Ext Time (p_c), s	0.0	12.5		0.5	0.1	12.1		0.1

Intersection Summary	
HCM 6th Ctrl Delay	31.9
HCM 6th LOS	C

Notes

User approved pedestrian interval to be less than phase max green.

* HCM 6th computational engine requires equal clearance times for the phases crossing the barrier.

Movement	EBL	EBT	EBR	WBL	WBT	WBR	NBL	NBT	NBR	SBL	SBT	SBR
Lane Configurations												
Traffic Volume (veh/h)	10	1485	15	10	975	80	75	10	20	65	5	30
Future Volume (veh/h)	10	1485	15	10	975	80	75	10	20	65	5	30
Initial Q (Qb), veh	0	0	0	0	0	0	0	0	0	0	0	0
Ped-Bike Adj(A_pbT)	1.00		1.00	1.00		1.00	1.00		1.00	1.00		1.00
Parking Bus, Adj	1.00	1.00	1.00	1.00	1.00	1.00	1.00	1.00	1.00	1.00	1.00	1.00
Work Zone On Approach		No			No			No			No	
Adj Sat Flow, veh/h/ln	1885	1885	1885	1870	1870	1870	1826	1826	1826	1885	1885	1885
Adj Flow Rate, veh/h	11	1650	17	11	1083	89	83	11	22	72	6	33
Peak Hour Factor	0.90	0.90	0.90	0.90	0.90	0.90	0.90	0.90	0.90	0.90	0.90	0.90
Percent Heavy Veh, %	1	1	1	2	2	2	5	5	5	1	1	1
Cap, veh/h	23	2648	27	23	2424	199	143	22	26	238	18	246
Arrive On Green	0.02	0.97	0.97	0.01	0.73	0.73	0.14	0.14	0.14	0.14	0.14	0.14
Sat Flow, veh/h	1795	3632	37	1781	3325	273	647	153	187	1271	124	1598
Grp Volume(v), veh/h	11	813	854	11	579	593	116	0	0	78	0	33
Grp Sat Flow(s),veh/h/ln	1795	1791	1878	1781	1777	1821	987	0	0	1396	0	1598
Q Serve(g_s), s	0.7	4.2	4.2	0.7	15.7	15.7	8.7	0.0	0.0	0.0	0.0	2.1
Cycle Q Clear(g_c), s	0.7	4.2	4.2	0.7	15.7	15.7	14.8	0.0	0.0	6.1	0.0	2.1
Prop In Lane	1.00		0.02	1.00		0.15	0.72		0.19	0.92		1.00
Lane Grp Cap(c), veh/h	23	1306	1369	23	1295	1327	191	0	0	255	0	246
V/C Ratio(X)	0.48	0.62	0.62	0.48	0.45	0.45	0.61	0.00	0.00	0.31	0.00	0.13
Avail Cap(c_a), veh/h	135	1306	1369	134	1295	1327	320	0	0	385	0	393
HCM Platoon Ratio	1.33	1.33	1.33	1.00	1.00	1.00	1.00	1.00	1.00	1.00	1.00	1.00
Upstream Filter(I)	0.47	0.47	0.47	1.00	1.00	1.00	1.00	0.00	0.00	1.00	0.00	1.00
Uniform Delay (d), s/veh	58.6	0.6	0.6	58.8	6.5	6.5	52.5	0.0	0.0	46.8	0.0	43.8
Incr Delay (d2), s/veh	7.1	1.1	1.0	15.0	1.1	1.1	3.1	0.0	0.0	0.7	0.0	0.2
Initial Q Delay(d3),s/veh	0.0	0.0	0.0	0.0	0.0	0.0	0.0	0.0	0.0	0.0	0.0	0.0
%ile BackOfQ(50%),veh/ln	0.4	1.0	1.0	0.4	5.5	5.6	3.6	0.0	0.0	2.2	0.0	0.9
Unsig. Movement Delay, s/veh												
LnGrp Delay(d),s/veh	65.7	1.6	1.6	73.8	7.6	7.6	55.6	0.0	0.0	47.5	0.0	44.1
LnGrp LOS	E	A	A	E	A	A	E	A	A	D	A	D
Approach Vol, veh/h		1678			1183			116			111	
Approach Delay, s/veh		2.0			8.3			55.6			46.5	
Approach LOS		A			A			E			D	

Timer - Assigned Phs	1	2		4	5	6		8
Phs Duration (G+Y+Rc), s	5.5	92.5		22.0	5.5	92.5		22.0
Change Period (Y+Rc), s	4.0	5.0		5.0	4.0	5.0		5.0
Max Green Setting (Gmax), s	9.0	69.0		28.0	9.0	69.0		28.0
Max Q Clear Time (g_c+I1), s	2.7	17.7		8.1	2.7	6.2		16.8
Green Ext Time (p_c), s	0.0	37.7		0.3	0.0	59.9		0.2

Intersection Summary	
HCM 6th Ctrl Delay	8.0
HCM 6th LOS	A

Notes

User approved pedestrian interval to be less than phase max green.

Movement	EBL	EBT	EBR	WBL	WBT	WBR	NBL	NBT	NBR	SBL	SBT	SBR
Lane Configurations												
Traffic Volume (veh/h)	40	1565	10	10	1070	40	20	0	15	35	0	30
Future Volume (veh/h)	40	1565	10	10	1070	40	20	0	15	35	0	30
Initial Q (Qb), veh	0	0	0	0	0	0	0	0	0	0	0	0
Ped-Bike Adj(A_pbT)	1.00		1.00	1.00		1.00	1.00		1.00	1.00		1.00
Parking Bus, Adj	1.00	1.00	1.00	1.00	1.00	1.00	1.00	1.00	1.00	1.00	1.00	1.00
Work Zone On Approach		No			No			No			No	
Adj Sat Flow, veh/h/ln	1856	1856	1856	1870	1870	1870	1781	1781	1781	1900	1900	1900
Adj Flow Rate, veh/h	42	1630	10	10	1115	42	21	0	16	36	0	31
Peak Hour Factor	0.96	0.96	0.96	0.96	0.96	0.96	0.96	0.96	0.96	0.96	0.96	0.96
Percent Heavy Veh, %	3	3	3	2	2	2	8	8	8	0	0	0
Cap, veh/h	66	2402	1071	22	2333	1041	86	0	144	86	0	154
Arrive On Green	0.04	0.68	0.68	0.01	0.66	0.66	0.10	0.00	0.10	0.10	0.00	0.10
Sat Flow, veh/h	1767	3526	1572	1781	3554	1585	6	0	1510	7	0	1610
Grp Volume(v), veh/h	42	1630	10	10	1115	42	21	0	16	36	0	31
Grp Sat Flow(s),veh/h/ln	1767	1763	1572	1781	1777	1585	6	0	1510	7	0	1610
Q Serve(g_s), s	2.0	23.1	0.2	0.5	13.2	0.8	0.0	0.0	0.8	0.0	0.0	1.5
Cycle Q Clear(g_c), s	2.0	23.1	0.2	0.5	13.2	0.8	8.0	0.0	0.8	8.0	0.0	1.5
Prop In Lane	1.00		1.00	1.00		1.00	1.00		1.00	1.00		1.00
Lane Grp Cap(c), veh/h	66	2402	1071	22	2333	1041	86	0	144	86	0	154
V/C Ratio(X)	0.64	0.68	0.01	0.45	0.48	0.04	0.24	0.00	0.11	0.42	0.00	0.20
Avail Cap(c_a), veh/h	191	2851	1271	106	2701	1205	443	0	555	254	0	344
HCM Platoon Ratio	1.00	1.00	1.00	1.00	1.00	1.00	1.00	1.00	1.00	1.00	1.00	1.00
Upstream Filter(I)	1.00	1.00	1.00	1.00	1.00	1.00	1.00	0.00	1.00	1.00	0.00	1.00
Uniform Delay (d), s/veh	40.1	8.0	4.3	41.4	7.3	5.1	42.2	0.0	34.9	42.2	0.0	35.2
Incr Delay (d2), s/veh	10.0	0.8	0.0	13.9	0.3	0.0	1.5	0.0	0.3	6.8	0.0	1.4
Initial Q Delay(d3),s/veh	0.0	0.0	0.0	0.0	0.0	0.0	0.0	0.0	0.0	0.0	0.0	0.0
%ile BackOfQ(50%),veh/ln	1.0	7.2	0.0	0.3	4.3	0.2	0.5	0.0	0.3	0.9	0.0	0.6
Unsig. Movement Delay, s/veh												
LnGrp Delay(d),s/veh	50.0	8.8	4.3	55.3	7.6	5.1	43.6	0.0	35.2	49.0	0.0	36.6
LnGrp LOS	D	A	A	E	A	A	D	A	D	D	A	D
Approach Vol, veh/h		1682			1167			37			67	
Approach Delay, s/veh		9.8			7.9			40.0			43.2	
Approach LOS		A			A			D			D	

Timer - Assigned Phs	1	2		4	5	6		8				
Phs Duration (G+Y+Rc), s	9.5	61.8		13.1	7.4	63.9		13.1				
Change Period (Y+Rc), s	6.4	6.4		5.0	6.4	6.4		5.0				
Max Green Setting (Gmax), s	9.1	64.1		18.0	5.0	68.2		31.0				
Max Q Clear Time (g_c+I1), s	4.0	15.2		10.0	2.5	25.1		10.0				
Green Ext Time (p_c), s	0.0	22.4		0.2	0.0	32.4		0.1				

Intersection Summary		
HCM 6th Ctrl Delay		10.2
HCM 6th LOS		B

Intersection	
Int Delay, s/veh	1.5

Movement	EBL	EBT	WBT	WBR	SBL	SBR
Lane Configurations						
Traffic Vol, veh/h	36	375	60	10	10	37
Future Vol, veh/h	36	375	60	10	10	37
Conflicting Peds, #/hr	0	0	0	0	0	0
Sign Control	Free	Free	Free	Free	Stop	Stop
RT Channelized	-	None	-	None	-	None
Storage Length	450	-	-	-	0	-
Veh in Median Storage, #	-	0	0	-	0	-
Grade, %	-	0	0	-	0	-
Peak Hour Factor	88	88	88	88	88	88
Heavy Vehicles, %	2	2	2	2	49	49
Mvmt Flow	41	426	68	11	11	42

Major/Minor	Major1		Major2		Minor2	
Conflicting Flow All	79	0	-	0	582	74
Stage 1	-	-	-	-	74	-
Stage 2	-	-	-	-	508	-
Critical Hdwy	4.12	-	-	-	6.89	6.69
Critical Hdwy Stg 1	-	-	-	-	5.89	-
Critical Hdwy Stg 2	-	-	-	-	5.89	-
Follow-up Hdwy	2.218	-	-	-	3.941	3.741
Pot Cap-1 Maneuver	1519	-	-	-	405	871
Stage 1	-	-	-	-	843	-
Stage 2	-	-	-	-	519	-
Platoon blocked, %		-	-	-		
Mov Cap-1 Maneuver	1519	-	-	-	394	871
Mov Cap-2 Maneuver	-	-	-	-	394	-
Stage 1	-	-	-	-	820	-
Stage 2	-	-	-	-	519	-

Approach	EB	WB	SB
HCM Control Delay, s	0.7	0	10.6
HCM LOS			B

Minor Lane/Major Mvmt	EBL	EBT	WBT	WBR	SBLn1
Capacity (veh/h)	1519	-	-	-	693
HCM Lane V/C Ratio	0.027	-	-	-	0.077
HCM Control Delay (s)	7.4	-	-	-	10.6
HCM Lane LOS	A	-	-	-	B
HCM 95th %tile Q(veh)	0.1	-	-	-	0.2

Intersection	
Int Delay, s/veh	6.3

Movement	EBL	EBT	EBR	WBL	WBT	WBR	NBL	NBT	NBR	SBL	SBT	SBR
Lane Configurations												
Traffic Vol, veh/h	0	216	10	5	97	0	90	5	185	5	0	0
Future Vol, veh/h	0	216	10	5	97	0	90	5	185	5	0	0
Conflicting Peds, #/hr	0	0	0	0	0	0	0	0	0	0	0	0
Sign Control	Free	Free	Free	Free	Free	Free	Stop	Stop	Stop	Stop	Stop	Stop
RT Channelized	-	-	None	-	-	None	-	-	None	-	-	None
Storage Length	-	-	-	-	-	-	-	-	-	-	-	-
Veh in Median Storage, #	-	0	-	-	0	-	-	0	-	-	0	-
Grade, %	-	0	-	-	0	-	-	0	-	-	0	-
Peak Hour Factor	87	87	87	87	87	87	87	87	87	87	87	87
Heavy Vehicles, %	4	4	4	30	30	30	1	1	1	0	0	0
Mvmt Flow	0	248	11	6	111	0	103	6	213	6	0	0

Major/Minor	Major1			Major2			Minor1			Minor2		
Conflicting Flow All	111	0	0	259	0	0	377	377	130	250	382	111
Stage 1	-	-	-	-	-	-	254	254	-	123	123	-
Stage 2	-	-	-	-	-	-	123	123	-	127	259	-
Critical Hdwy	4.16	-	-	4.55	-	-	7.315	6.515	6.915	7.3	6.5	6.2
Critical Hdwy Stg 1	-	-	-	-	-	-	6.515	5.515	-	6.1	5.5	-
Critical Hdwy Stg 2	-	-	-	-	-	-	6.115	5.515	-	6.5	5.5	-
Follow-up Hdwy	2.238	-	-	2.485	-	-	3.5095	4.0095	3.3095	3.5	4	3.3
Pot Cap-1 Maneuver	1464	-	-	1140	-	-	570	556	899	698	554	948
Stage 1	-	-	-	-	-	-	731	699	-	886	798	-
Stage 2	-	-	-	-	-	-	883	796	-	869	697	-
Platoon blocked, %		-	-		-	-						
Mov Cap-1 Maneuver	1464	-	-	1140	-	-	567	553	899	526	551	948
Mov Cap-2 Maneuver	-	-	-	-	-	-	567	553	-	526	551	-
Stage 1	-	-	-	-	-	-	731	699	-	886	793	-
Stage 2	-	-	-	-	-	-	878	791	-	658	697	-

Approach	EB	WB	NB	SB
HCM Control Delay, s	0	0.4	13.4	11.9
HCM LOS			B	B

Minor Lane/Major Mvmt	NBLn1	EBL	EBT	EBR	WBL	WBT	WBR	SBLn1
Capacity (veh/h)	750	1464	-	-	1140	-	-	526
HCM Lane V/C Ratio	0.429	-	-	-	0.005	-	-	0.011
HCM Control Delay (s)	13.4	0	-	-	8.2	0	-	11.9
HCM Lane LOS	B	A	-	-	A	A	-	B
HCM 95th %tile Q(veh)	2.2	0	-	-	0	-	-	0

Movement	WBL	WBR	NBT	NBR	SBL	SBT
Lane Configurations						
Traffic Volume (veh/h)	31	151	950	190	56	320
Future Volume (veh/h)	31	151	950	190	56	320
Initial Q (Qb), veh	0	0	0	0	0	0
Ped-Bike Adj(A_pbT)	1.00	1.00		1.00	1.00	
Parking Bus, Adj	1.00	1.00	1.00	1.00	1.00	1.00
Work Zone On Approach	No		No			No
Adj Sat Flow, veh/h/ln	1618	1618	1856	1856	1826	1826
Adj Flow Rate, veh/h	33	162	1022	204	60	344
Peak Hour Factor	0.93	0.93	0.93	0.93	0.93	0.93
Percent Heavy Veh, %	19	19	3	3	5	5
Cap, veh/h	36	177	1015	203	106	1362
Arrive On Green	0.15	0.15	0.68	0.68	0.03	0.75
Sat Flow, veh/h	235	1156	1502	300	1739	1826
Grp Volume(v), veh/h	196	0	0	1226	60	344
Grp Sat Flow(s),veh/h/ln	1399	0	0	1802	1739	1826
Q Serve(g_s), s	19.7	0.0	0.0	96.5	1.4	8.4
Cycle Q Clear(g_c), s	19.7	0.0	0.0	96.5	1.4	8.4
Prop In Lane	0.17	0.83		0.17	1.00	
Lane Grp Cap(c), veh/h	214	0	0	1218	106	1362
V/C Ratio(X)	0.92	0.00	0.00	1.01	0.57	0.25
Avail Cap(c_a), veh/h	238	0	0	1218	115	1362
HCM Platoon Ratio	1.00	1.00	1.00	1.00	1.00	1.00
Upstream Filter(I)	1.00	0.00	0.00	1.00	1.00	1.00
Uniform Delay (d), s/veh	59.6	0.0	0.0	23.1	39.7	5.7
Incr Delay (d2), s/veh	34.6	0.0	0.0	27.5	7.3	0.1
Initial Q Delay(d3),s/veh	0.0	0.0	0.0	0.0	0.0	0.0
%ile BackOfQ(50%),veh/ln	9.1	0.0	0.0	46.7	1.7	3.1
Unsig. Movement Delay, s/veh						
LnGrp Delay(d),s/veh	94.1	0.0	0.0	50.6	47.0	5.8
LnGrp LOS	F	A	A	F	D	A
Approach Vol, veh/h	196		1226			404
Approach Delay, s/veh	94.1		50.6			11.9
Approach LOS	F		D			B

Timer - Assigned Phs	1	2				6	8
Phs Duration (G+Y+Rc), s	10.0	104.6				114.6	28.2
Change Period (Y+Rc), s	5.5	* 8.1				* 8.1	6.3
Max Green Setting (Gmax), s	5.3	* 97				* 1.1E2	24.3
Max Q Clear Time (g_c+I1), s	3.4	98.5				10.4	21.7
Green Ext Time (p_c), s	0.0	0.0				3.5	0.2

Intersection Summary	
HCM 6th Ctrl Delay	46.7
HCM 6th LOS	D

Notes

User approved pedestrian interval to be less than phase max green.

User approved volume balancing among the lanes for turning movement.

* HCM 6th computational engine requires equal clearance times for the phases crossing the barrier.

Movement	EBL	EBR	NBL	NBT	SBT	SBR
Lane Configurations						
Traffic Volume (vph)	75	55	80	1305	160	45
Future Volume (vph)	75	55	80	1305	160	45
Ideal Flow (vphpl)	1900	1900	1900	1900	1900	1900
Total Lost time (s)	5.0	5.0	6.5	6.5	6.5	6.5
Lane Util. Factor	1.00	1.00	1.00	1.00	1.00	1.00
Frt	1.00	0.85	1.00	1.00	1.00	0.85
Flt Protected	0.95	1.00	0.95	1.00	1.00	1.00
Satd. Flow (prot)	1641	1468	1752	1845	1743	1482
Flt Permitted	0.95	1.00	0.56	1.00	1.00	1.00
Satd. Flow (perm)	1641	1468	1039	1845	1743	1482
Peak-hour factor, PHF	0.92	0.92	0.92	0.92	0.92	0.92
Adj. Flow (vph)	82	60	87	1418	174	49
RTOR Reduction (vph)	0	54	0	0	0	20
Lane Group Flow (vph)	82	6	87	1418	174	29
Heavy Vehicles (%)	10%	10%	3%	3%	9%	9%
Turn Type	custom	custom	pm+pt	NA	NA	Perm
Protected Phases	3	3	5	2	6	
Permitted Phases	4	4	2			6
Actuated Green, G (s)	6.7	6.7	54.4	54.4	43.4	43.4
Effective Green, g (s)	6.7	6.7	54.4	54.4	43.4	43.4
Actuated g/C Ratio	0.09	0.09	0.75	0.75	0.60	0.60
Clearance Time (s)	5.0	5.0	6.5	6.5	6.5	6.5
Vehicle Extension (s)	2.0	2.0	2.0	5.0	5.0	5.0
Lane Grp Cap (vph)	151	135	822	1382	1041	885
v/s Ratio Prot	c0.05	0.00	0.01	c0.77	0.10	
v/s Ratio Perm			0.07			0.02
v/c Ratio	0.54	0.04	0.11	1.03	0.17	0.03
Uniform Delay, d1	31.5	30.0	2.7	9.1	6.5	6.0
Progression Factor	1.00	1.00	1.00	1.00	1.00	1.00
Incremental Delay, d2	2.1	0.0	0.0	31.1	0.2	0.0
Delay (s)	33.6	30.1	2.7	40.2	6.7	6.0
Level of Service	C	C	A	D	A	A
Approach Delay (s)	32.1			38.0	6.5	
Approach LOS	C			D	A	

Intersection Summary			
HCM 2000 Control Delay	33.8	HCM 2000 Level of Service	C
HCM 2000 Volume to Capacity ratio	1.15		
Actuated Cycle Length (s)	72.6	Sum of lost time (s)	21.0
Intersection Capacity Utilization	82.4%	ICU Level of Service	E
Analysis Period (min)	15		
c Critical Lane Group			

Movement	EBL	EBR	NBL	NBT	SBT	SBR
Lane Configurations						
Traffic Volume (vph)	315	5	20	1020	130	45
Future Volume (vph)	315	5	20	1020	130	45
Ideal Flow (vphpl)	1900	1900	1900	1900	1900	1900
Total Lost time (s)	5.0	5.0	6.0	6.0	6.0	5.0
Lane Util. Factor	1.00	1.00	1.00	1.00	1.00	1.00
Frt	1.00	0.85	1.00	1.00	1.00	0.85
Flt Protected	0.95	1.00	0.95	1.00	1.00	1.00
Satd. Flow (prot)	1770	1583	1752	1845	1810	1538
Flt Permitted	0.95	1.00	0.63	1.00	1.00	1.00
Satd. Flow (perm)	1770	1583	1169	1845	1810	1538
Peak-hour factor, PHF	0.91	0.91	0.91	0.91	0.91	0.91
Adj. Flow (vph)	346	5	22	1121	143	49
RTOR Reduction (vph)	0	4	0	0	0	6
Lane Group Flow (vph)	346	1	22	1121	143	43
Heavy Vehicles (%)	2%	2%	3%	3%	5%	5%
Turn Type	custom	custom	pm+pt	NA	NA	pm+ov
Protected Phases	3	3	5	2	6	3
Permitted Phases	4	4	2			6
Actuated Green, G (s)	40.7	40.7	128.3	128.3	118.9	159.6
Effective Green, g (s)	40.7	40.7	128.3	128.3	118.9	159.6
Actuated g/C Ratio	0.23	0.23	0.71	0.71	0.66	0.89
Clearance Time (s)	5.0	5.0	6.0	6.0	6.0	5.0
Vehicle Extension (s)	2.0	2.0	2.0	2.0	2.0	2.0
Lane Grp Cap (vph)	400	357	844	1315	1195	1363
v/s Ratio Prot	c0.20	0.00	0.00	c0.61	0.08	0.01
v/s Ratio Perm			0.02			0.02
v/c Ratio	0.86	0.00	0.03	0.85	0.12	0.03
Uniform Delay, d1	67.0	53.9	7.6	18.9	11.3	1.2
Progression Factor	1.00	1.00	1.00	1.00	1.00	1.00
Incremental Delay, d2	16.9	0.0	0.0	7.1	0.2	0.0
Delay (s)	83.9	53.9	7.6	26.1	11.5	1.2
Level of Service	F	D	A	C	B	A
Approach Delay (s)	83.5			25.7	8.8	
Approach LOS	F			C	A	

Intersection Summary			
HCM 2000 Control Delay	35.8	HCM 2000 Level of Service	D
HCM 2000 Volume to Capacity ratio	0.90		
Actuated Cycle Length (s)	180.0	Sum of lost time (s)	20.0
Intersection Capacity Utilization	80.3%	ICU Level of Service	D
Analysis Period (min)	15		
c Critical Lane Group			

Intersection	
Int Delay, s/veh	0.7

Movement	EBL	EBT	EBR	WBL	WBT	WBR	NBL	NBT	NBR	SBL	SBT	SBR
Lane Configurations												
Traffic Vol, veh/h	0	0	0	15	0	10	10	950	0	0	45	90
Future Vol, veh/h	0	0	0	15	0	10	10	950	0	0	45	90
Conflicting Peds, #/hr	0	0	0	0	0	0	0	0	0	0	0	0
Sign Control	Stop	Stop	Stop	Stop	Stop	Stop	Free	Free	Free	Free	Free	Free
RT Channelized	-	-	None	-	-	None	-	-	None	-	-	None
Storage Length	-	-	-	-	-	500	175	-	-	-	-	375
Veh in Median Storage, #	-	1	-	-	0	-	-	0	-	-	0	-
Grade, %	-	0	-	-	0	-	-	0	-	-	0	-
Peak Hour Factor	83	83	83	83	83	83	83	83	83	83	83	83
Heavy Vehicles, %	0	0	0	19	19	19	3	3	3	4	4	4
Mvmt Flow	0	0	0	18	0	12	12	1145	0	0	54	108

Major/Minor	Minor1			Major1			Major2		
Conflicting Flow All	1277	1331	1145	162	0	-	-	-	0
Stage 1	1169	1169	-	-	-	-	-	-	-
Stage 2	108	162	-	-	-	-	-	-	-
Critical Hdwy	6.59	6.69	6.39	4.13	-	-	-	-	-
Critical Hdwy Stg 1	5.59	5.69	-	-	-	-	-	-	-
Critical Hdwy Stg 2	5.59	5.69	-	-	-	-	-	-	-
Follow-up Hdwy	3.671	4.171	3.471	2.227	-	-	-	-	-
Pot Cap-1 Maneuver	169	143	224	1411	-	0	0	-	-
Stage 1	273	248	-	-	-	0	0	-	-
Stage 2	876	733	-	-	-	0	0	-	-
Platoon blocked, %					-			-	-
Mov Cap-1 Maneuver	167	0	224	1411	-	-	-	-	-
Mov Cap-2 Maneuver	167	0	-	-	-	-	-	-	-
Stage 1	271	0	-	-	-	-	-	-	-
Stage 2	876	0	-	-	-	-	-	-	-

Approach	WB	NB	SB
HCM Control Delay, s	26.3	0.1	0
HCM LOS	D		

Minor Lane/Major Mvmt	NBL	NBT	WBLn1	WBLn2	SBT	SBR
Capacity (veh/h)	1411	-	167	224	-	-
HCM Lane V/C Ratio	0.009	-	0.108	0.054	-	-
HCM Control Delay (s)	7.6	-	29.2	22	-	-
HCM Lane LOS	A	-	D	C	-	-
HCM 95th %tile Q(veh)	0	-	0.4	0.2	-	-

Movement	EBL	EBR	NBL	NBT	SBT	SBR
Lane Configurations						
Traffic Volume (veh/h)	605	10	80	345	60	5
Future Volume (veh/h)	605	10	80	345	60	5
Initial Q (Qb), veh	0	0	0	0	0	0
Ped-Bike Adj(A_pbT)	1.00	1.00	1.00			1.00
Parking Bus, Adj	1.00	1.00	1.00	1.00	1.00	1.00
Work Zone On Approach	No			No	No	
Adj Sat Flow, veh/h/ln	1856	1856	1870	1870	1811	1811
Adj Flow Rate, veh/h	738	12	98	421	73	6
Peak Hour Factor	0.82	0.82	0.82	0.82	0.82	0.82
Percent Heavy Veh, %	3	3	2	2	6	6
Cap, veh/h	800	712	158	571	632	52
Arrive On Green	0.45	0.45	0.38	0.38	0.38	0.38
Sat Flow, veh/h	1767	1572	266	1493	1651	136
Grp Volume(v), veh/h	738	12	519	0	0	79
Grp Sat Flow(s),veh/h/ln	1767	1572	1759	0	0	1787
Q Serve(g_s), s	30.0	0.3	14.1	0.0	0.0	2.2
Cycle Q Clear(g_c), s	30.0	0.3	19.6	0.0	0.0	2.2
Prop In Lane	1.00	1.00	0.19			0.08
Lane Grp Cap(c), veh/h	800	712	729	0	0	684
V/C Ratio(X)	0.92	0.02	0.71	0.00	0.00	0.12
Avail Cap(c_a), veh/h	1125	1001	1396	0	0	787
HCM Platoon Ratio	1.00	1.00	1.00	1.00	1.00	1.00
Upstream Filter(I)	1.00	1.00	1.00	0.00	0.00	1.00
Uniform Delay (d), s/veh	19.7	11.5	20.5	0.0	0.0	15.3
Incr Delay (d2), s/veh	9.7	0.0	2.8	0.0	0.0	0.2
Initial Q Delay(d3),s/veh	0.0	0.0	0.0	0.0	0.0	0.0
%ile BackOfQ(50%),veh/ln	13.2	0.1	8.1	0.0	0.0	0.9
Unsig. Movement Delay, s/veh						
LnGrp Delay(d),s/veh	29.3	11.6	23.3	0.0	0.0	15.4
LnGrp LOS	C	B	C	A	A	B
Approach Vol, veh/h	750			519	79	
Approach Delay, s/veh	29.1			23.3	15.4	
Approach LOS	C			C	B	

Timer - Assigned Phs		2		4		6
Phs Duration (G+Y+Rc), s		35.6		40.9		35.6
Change Period (Y+Rc), s		6.3		6.3		6.3
Max Green Setting (Gmax), s		58.7		48.7		33.7
Max Q Clear Time (g_c+I1), s		21.6		32.0		4.2
Green Ext Time (p_c), s		7.7		2.6		0.7

Intersection Summary	
HCM 6th Ctrl Delay	26.0
HCM 6th LOS	C

Movement	EBL	EBT	EBR	WBL	WBT	WBR	NBL	NBT	NBR	SBL	SBT	SBR
Lane Configurations												
Traffic Volume (veh/h)	160	10	20	5	0	5	5	1081	0	5	371	65
Future Volume (veh/h)	160	10	20	5	0	5	5	1081	0	5	371	65
Initial Q (Qb), veh	0	0	0	0	0	0	0	0	0	0	0	0
Ped-Bike Adj(A_pbT)	1.00		0.98	1.00		1.00	1.00		1.00	1.00		1.00
Parking Bus, Adj	1.00	1.00	1.00	1.00	1.00	1.00	1.00	1.00	1.00	1.00	1.00	1.00
Work Zone On Approach		No			No			No			No	
Adj Sat Flow, veh/h/ln	1885	1885	1885	1693	1693	1693	1752	1752	1752	1648	1648	1648
Adj Flow Rate, veh/h	174	11	22	5	0	5	5	1175	0	5	403	71
Peak Hour Factor	0.92	0.92	0.92	0.92	0.92	0.92	0.92	0.92	0.92	0.92	0.92	0.92
Percent Heavy Veh, %	1	1	1	14	14	14	10	10	10	17	17	17
Cap, veh/h	211	10	21	268	0	253	554	1191	0	69	1120	949
Arrive On Green	0.13	0.13	0.13	0.00	0.00	0.18	0.00	0.68	0.00	0.00	0.68	0.68
Sat Flow, veh/h	1223	77	155	1612	0	1434	1668	1752	0	1570	1648	1397
Grp Volume(v), veh/h	207	0	0	5	0	5	5	1175	0	5	403	71
Grp Sat Flow(s),veh/h/ln	1455	0	0	1612	0	1434	1668	1752	0	1570	1648	1397
Q Serve(g_s), s	18.6	0.0	0.0	0.4	0.0	0.4	0.1	91.0	0.0	0.1	14.5	2.4
Cycle Q Clear(g_c), s	18.6	0.0	0.0	0.4	0.0	0.4	0.1	91.0	0.0	0.1	14.5	2.4
Prop In Lane	0.84		0.11	1.00		1.00	1.00		0.00	1.00		1.00
Lane Grp Cap(c), veh/h	242	0	0	268	0	253	554	1191	0	69	1120	949
V/C Ratio(X)	0.86	0.00	0.00	0.02	0.00	0.02	0.01	0.99	0.00	0.07	0.36	0.07
Avail Cap(c_a), veh/h	242	0	0	349	0	335	596	1193	0	108	1122	951
HCM Platoon Ratio	1.00	1.00	1.00	1.00	1.00	1.00	1.00	1.00	1.00	1.00	1.00	1.00
Upstream Filter(I)	1.00	0.00	0.00	1.00	0.00	1.00	1.00	1.00	0.00	1.00	1.00	1.00
Uniform Delay (d), s/veh	61.0	0.0	0.0	50.3	0.0	47.4	7.8	21.7	0.0	37.0	9.5	7.5
Incr Delay (d2), s/veh	25.5	0.0	0.0	0.0	0.0	0.0	0.0	22.9	0.0	0.4	0.4	0.1
Initial Q Delay(d3),s/veh	0.0	0.0	0.0	0.0	0.0	0.0	0.0	0.0	0.0	0.0	0.0	0.0
%ile BackOfQ(50%),veh/ln	9.1	0.0	0.0	0.2	0.0	0.1	0.0	41.6	0.0	0.1	5.2	0.7
Unsig. Movement Delay, s/veh												
LnGrp Delay(d),s/veh	86.5	0.0	0.0	50.4	0.0	47.5	7.8	44.7	0.0	37.5	9.9	7.6
LnGrp LOS	F	A	A	D	A	D	A	D	A	D	A	A
Approach Vol, veh/h		207			10			1180			479	
Approach Delay, s/veh		86.5			48.9			44.5			9.8	
Approach LOS		F			D			D			A	

Timer - Assigned Phs	1	2	3	4	5	6		8
Phs Duration (G+Y+Rc), s	6.0	101.8	6.0	25.5	6.0	101.8		31.5
Change Period (Y+Rc), s	5.5	7.1	5.5	6.9	5.5	7.1		* 6.9
Max Green Setting (Gmax), s	4.0	94.9	7.5	18.6	4.0	94.9		* 33
Max Q Clear Time (g_c+I1), s	2.1	93.0	2.4	20.6	2.1	16.5		2.4
Green Ext Time (p_c), s	0.0	1.8	0.0	0.0	0.0	6.8		0.0

Intersection Summary	
HCM 6th Ctrl Delay	40.3
HCM 6th LOS	D

Notes

* HCM 6th computational engine requires equal clearance times for the phases crossing the barrier.

Movement	EBL	EBT	EBR	WBL	WBT	WBR	NBL	NBT	NBR	SBL	SBT	SBR
Lane Configurations												
Traffic Volume (vph)	620	321	85	5	991	545	105	100	10	100	25	275
Future Volume (vph)	620	321	85	5	991	545	105	100	10	100	25	275
Ideal Flow (vphpl)	1900	1900	1900	1900	1900	1900	1900	1900	1900	1900	1900	1900
Total Lost time (s)	6.4	6.4	6.4	6.4	6.4	6.4	5.0	5.0		5.0	5.0	5.0
Lane Util. Factor	1.00	0.95	1.00	1.00	0.95	1.00	1.00	1.00		1.00	1.00	1.00
Frpb, ped/bikes	1.00	1.00	1.00	1.00	1.00	1.00	1.00	1.00		1.00	1.00	0.98
Flpb, ped/bikes	1.00	1.00	1.00	1.00	1.00	1.00	0.99	1.00		1.00	1.00	1.00
Frt	1.00	1.00	0.85	1.00	1.00	0.85	1.00	0.99		1.00	1.00	0.85
Flt Protected	0.95	1.00	1.00	0.95	1.00	1.00	0.95	1.00		0.95	1.00	1.00
Satd. Flow (prot)	1687	3374	1509	1687	3374	1509	1774	1854		1736	1827	1517
Flt Permitted	0.95	1.00	1.00	0.95	1.00	1.00	0.70	1.00		0.54	1.00	1.00
Satd. Flow (perm)	1687	3374	1509	1687	3374	1509	1303	1854		985	1827	1517
Peak-hour factor, PHF	0.95	0.95	0.95	0.95	0.95	0.95	0.95	0.95	0.95	0.95	0.95	0.95
Adj. Flow (vph)	653	338	89	5	1043	574	111	105	11	105	26	289
RTOR Reduction (vph)	0	0	27	0	0	237	0	3	0	0	0	258
Lane Group Flow (vph)	653	338	62	5	1043	337	111	113	0	105	26	31
Confl. Peds. (#/hr)							9					9
Heavy Vehicles (%)	7%	7%	7%	7%	7%	7%	1%	1%	1%	4%	4%	4%
Turn Type	Prot	NA	Perm	Prot	NA	Perm	pm+pt	NA		pm+pt	NA	Perm
Protected Phases	5 15	2		1	6		3	8		7	4	
Permitted Phases			2			6	8			4		4
Actuated Green, G (s)	51.8	106.7	106.7	1.3	49.8	49.8	24.3	17.3		22.3	16.3	16.3
Effective Green, g (s)	51.8	106.7	106.7	1.3	49.8	49.8	24.3	17.3		22.3	16.3	16.3
Actuated g/C Ratio	0.34	0.69	0.69	0.01	0.32	0.32	0.16	0.11		0.14	0.11	0.11
Clearance Time (s)		6.4	6.4	6.4	6.4	6.4	5.0	5.0		5.0	5.0	5.0
Vehicle Extension (s)		5.0	5.0	3.0	5.0	5.0	3.0	3.0		3.0	3.0	3.0
Lane Grp Cap (vph)	567	2336	1044	14	1090	487	226	208		171	193	160
v/s Ratio Prot	c0.39	0.10		0.00	c0.31		0.02	0.06		c0.02	0.01	
v/s Ratio Perm			0.04			0.22	0.05			c0.06		0.02
v/c Ratio	1.15	0.14	0.06	0.36	0.96	0.69	0.49	0.54		0.61	0.13	0.19
Uniform Delay, d1	51.1	8.1	7.6	76.0	51.1	45.5	58.5	64.7		61.1	62.5	62.9
Progression Factor	1.00	1.00	1.00	1.00	1.00	1.00	1.00	1.00		1.00	1.00	1.00
Incremental Delay, d2	87.1	0.1	0.0	14.9	18.0	5.3	1.7	2.9		6.4	0.3	0.6
Delay (s)	138.3	8.2	7.7	90.9	69.1	50.8	60.2	67.6		67.5	62.8	63.5
Level of Service	F	A	A	F	E	D	E	E		E	E	E
Approach Delay (s)		86.8			62.7			64.0			64.4	
Approach LOS		F			E			E			E	

Intersection Summary			
HCM 2000 Control Delay	70.8	HCM 2000 Level of Service	E
HCM 2000 Volume to Capacity ratio	0.97		
Actuated Cycle Length (s)	154.1	Sum of lost time (s)	29.2
Intersection Capacity Utilization	93.6%	ICU Level of Service	F
Analysis Period (min)	15		

c Critical Lane Group

Movement	EBT	EBR	WBL	WBT	NBL	NBR
Lane Configurations						
Traffic Volume (veh/h)	391	220	330	1036	1010	630
Future Volume (veh/h)	391	220	330	1036	1010	630
Initial Q (Qb), veh	0	0	0	0	0	0
Ped-Bike Adj(A_pbT)		1.00	1.00		1.00	1.00
Parking Bus, Adj	1.00	1.00	1.00	1.00	1.00	1.00
Work Zone On Approach	No			No	No	
Adj Sat Flow, veh/h/ln	1678	1678	1781	1781	1885	1885
Adj Flow Rate, veh/h	425	0	359	1126	1098	685
Peak Hour Factor	0.92	0.92	0.92	0.92	0.92	0.92
Percent Heavy Veh, %	15	15	8	8	1	1
Cap, veh/h	1129		381	1760	1358	623
Arrive On Green	0.25	0.00	0.22	0.52	0.39	0.39
Sat Flow, veh/h	4731	1422	1697	3474	3483	1598
Grp Volume(v), veh/h	425	0	359	1126	1098	685
Grp Sat Flow(s),veh/h/ln	1527	1422	1697	1692	1742	1598
Q Serve(g_s), s	10.0	0.0	27.1	31.1	36.5	50.7
Cycle Q Clear(g_c), s	10.0	0.0	27.1	31.1	36.5	50.7
Prop In Lane		1.00	1.00		1.00	1.00
Lane Grp Cap(c), veh/h	1129		381	1760	1358	623
V/C Ratio(X)	0.38		0.94	0.64	0.81	1.10
Avail Cap(c_a), veh/h	1129		386	1760	1358	623
HCM Platoon Ratio	1.00	1.00	1.00	1.00	1.00	1.00
Upstream Filter(I)	1.00	0.00	0.81	0.81	1.00	1.00
Uniform Delay (d), s/veh	40.7	0.0	49.6	22.4	35.3	39.7
Incr Delay (d2), s/veh	1.0	0.0	27.5	1.5	5.3	66.3
Initial Q Delay(d3),s/veh	0.0	0.0	0.0	0.0	0.0	0.0
%ile BackOfQ(50%),veh/ln	3.9	0.0	14.3	12.5	16.3	31.0
Unsig. Movement Delay, s/veh						
LnGrp Delay(d),s/veh	41.6	0.0	77.1	23.9	40.6	105.9
LnGrp LOS	D		E	C	D	F
Approach Vol, veh/h	425	A		1485	1783	
Approach Delay, s/veh	41.6			36.8	65.7	
Approach LOS	D			D	E	

Timer - Assigned Phs	1	2				6	8
Phs Duration (G+Y+Rc), s	35.6	38.4				74.0	56.0
Change Period (Y+Rc), s	6.4	6.4				6.4	5.3
Max Green Setting (Gmax), s	29.6	31.6				67.6	50.7
Max Q Clear Time (g_c+I1), s	29.1	12.0				33.1	52.7
Green Ext Time (p_c), s	0.1	4.8				18.7	0.0

Intersection Summary	
HCM 6th Ctrl Delay	51.3
HCM 6th LOS	D

Notes

Unsignalized Delay for [EBR] is excluded from calculations of the approach delay and intersection delay.

Movement	EBL	EBT	EBR	WBL	WBT	WBR	NBL	NBT	NBR	SBL	SBT	SBR
Lane Configurations												
Traffic Volume (vph)	25	535	0	0	1830	520	0	0	385	0	0	670
Future Volume (vph)	25	535	0	0	1830	520	0	0	385	0	0	670
Ideal Flow (vphpl)	1900	1900	1900	1900	1900	1900	1900	1900	1900	1900	1900	1900
Total Lost time (s)	5.0	5.0			5.0	5.0			4.0			5.0
Lane Util. Factor	1.00	0.95			0.91	1.00			1.00			1.00
Frt	1.00	1.00			1.00	0.85			0.86			0.86
Flt Protected	0.95	1.00			1.00	1.00			1.00			1.00
Satd. Flow (prot)	1556	3112			4988	1553			1405			1522
Flt Permitted	0.95	1.00			1.00	1.00			1.00			1.00
Satd. Flow (perm)	1556	3112			4988	1553			1405			1522
Peak-hour factor, PHF	0.98	0.98	0.98	0.98	0.98	0.98	0.98	0.98	0.98	0.98	0.98	0.98
Adj. Flow (vph)	26	546	0	0	1867	531	0	0	393	0	0	684
RTOR Reduction (vph)	0	0	0	0	0	190	0	0	0	0	0	68
Lane Group Flow (vph)	26	546	0	0	1867	341	0	0	393	0	0	616
Heavy Vehicles (%)	16%	16%	16%	4%	4%	4%	17%	17%	17%	8%	8%	8%
Turn Type	Prot	NA			NA	custom			Free			pt+ov
Protected Phases	1	1 6 8			6	4 5 13						1 8
Permitted Phases						6			Free			8 1
Actuated Green, G (s)	24.3	96.0			57.0	70.7			110.0			34.0
Effective Green, g (s)	24.3	96.0			57.0	70.7			110.0			34.0
Actuated g/C Ratio	0.22	0.87			0.52	0.64			1.00			0.31
Clearance Time (s)	5.0				5.0							
Vehicle Extension (s)	2.0				2.0							
Lane Grp Cap (vph)	343	2715			2584	1068			1405			470
v/s Ratio Prot	0.02	0.18			c0.37	0.12						c0.40
v/s Ratio Perm						0.10			c0.28			
v/c Ratio	0.08	0.20			0.72	0.32			0.28			1.31
Uniform Delay, d1	34.0	1.1			20.4	8.8			0.0			38.0
Progression Factor	0.86	0.64			1.00	1.00			1.00			1.00
Incremental Delay, d2	0.0	0.0			1.8	0.1			0.5			154.1
Delay (s)	29.4	0.7			22.2	8.9			0.5			192.1
Level of Service	C	A			C	A			A			F
Approach Delay (s)		2.0			19.3			0.5			192.1	
Approach LOS		A			B			A			F	

Intersection Summary			
HCM 2000 Control Delay	44.2	HCM 2000 Level of Service	D
HCM 2000 Volume to Capacity ratio	0.98		
Actuated Cycle Length (s)	110.0	Sum of lost time (s)	20.0
Intersection Capacity Utilization	85.2%	ICU Level of Service	E
Analysis Period (min)	15		
c Critical Lane Group			

Movement	EBL	EBT	EBR	WBL	WBT	WBR	NBL	NBT	NBR	SBL	SBT	SBR
Lane Configurations												
Traffic Volume (vph)	445	195	80	711	555	1235	0	0	0	370	930	515
Future Volume (vph)	445	195	80	711	555	1235	0	0	0	370	930	515
Ideal Flow (vphpl)	1900	1900	1900	1900	1900	1900	1900	1900	1900	1900	1900	1900
Total Lost time (s)	5.0	5.0		5.0	5.0	4.0				5.0	5.0	5.0
Lane Util. Factor	0.97	0.95		1.00	0.95	1.00				0.97	0.95	0.95
Frpb, ped/bikes	1.00	0.99		1.00	1.00	1.00				1.00	1.00	1.00
Flpb, ped/bikes	1.00	1.00		1.00	1.00	1.00				1.00	1.00	1.00
Frt	1.00	0.96		1.00	1.00	0.85				1.00	1.00	0.85
Flt Protected	0.95	1.00		0.95	1.00	1.00				0.95	1.00	1.00
Satd. Flow (prot)	3335	3261		1719	3438	1538				3335	1719	1461
Flt Permitted	0.95	1.00		0.95	1.00	1.00				0.95	1.00	1.00
Satd. Flow (perm)	3335	3261		1719	3438	1538				3335	1719	1461
Peak-hour factor, PHF	0.97	0.97	0.97	0.97	0.97	0.97	0.97	0.97	0.97	0.97	0.97	0.97
Adj. Flow (vph)	459	201	82	733	572	1273	0	0	0	381	959	531
RTOR Reduction (vph)	0	40	0	0	0	4	0	0	0	0	0	0
Lane Group Flow (vph)	459	243	0	733	572	1269	0	0	0	381	959	531
Confl. Peds. (#/hr)			2	2								
Heavy Vehicles (%)	5%	5%	5%	5%	5%	5%	0%	0%	0%	5%	5%	5%
Turn Type	Split	NA		Split	NA	custom				Split	NA	custom
Protected Phases	2	2		3	3	7				4	4	4 5
Permitted Phases						7						
Actuated Green, G (s)	12.0	12.0		38.0	38.0	89.0				45.0	45.0	62.0
Effective Green, g (s)	12.0	12.0		38.0	38.0	89.0				45.0	45.0	62.0
Actuated g/C Ratio	0.11	0.11		0.35	0.35	0.81				0.41	0.41	0.56
Clearance Time (s)	5.0	5.0		5.0	5.0	4.0				5.0	5.0	
Vehicle Extension (s)	3.0	3.0		3.0	3.0	3.0				3.0	3.0	
Lane Grp Cap (vph)	363	355		593	1187	1244				1364	703	823
v/s Ratio Prot	c0.14	0.07		c0.43	0.17	0.83				0.11	c0.56	0.36
v/s Ratio Perm												
v/c Ratio	1.26	0.68		1.24	0.48	1.02				0.28	1.36	0.65
Uniform Delay, d1	49.0	47.2		36.0	28.3	10.5				21.7	32.5	16.5
Progression Factor	1.00	1.00		0.70	0.64	1.46				1.00	1.00	1.00
Incremental Delay, d2	139.3	5.4		114.8	0.8	24.7				0.1	173.0	1.7
Delay (s)	188.3	52.6		140.0	18.8	40.1				21.8	205.5	18.2
Level of Service	F	D		F	B	D				C	F	B
Approach Delay (s)		136.5			63.8			0.0			114.9	
Approach LOS		F			E			A			F	

Intersection Summary			
HCM 2000 Control Delay	92.6	HCM 2000 Level of Service	F
HCM 2000 Volume to Capacity ratio	1.30		
Actuated Cycle Length (s)	110.0	Sum of lost time (s)	15.0
Intersection Capacity Utilization	119.4%	ICU Level of Service	H
Analysis Period (min)	15		

c Critical Lane Group

Movement	EBL	EBT	EBR	WBL	WBT	WBR	NBL	NBT	NBR	SBL	SBT	SBR
Lane Configurations												
Traffic Volume (veh/h)	490	450	125	845	590	175	120	855	710	90	845	180
Future Volume (veh/h)	490	450	125	845	590	175	120	855	710	90	845	180
Initial Q (Qb), veh	0	0	0	0	0	0	0	0	0	0	0	0
Ped-Bike Adj(A_pbT)	1.00		1.00	1.00		1.00	1.00		1.00	1.00		1.00
Parking Bus, Adj	1.00	1.00	1.00	1.00	1.00	1.00	1.00	1.00	1.00	1.00	1.00	1.00
Work Zone On Approach		No			No			No			No	
Adj Sat Flow, veh/h/ln	1841	1841	1841	1856	1856	1856	1826	1826	1826	1811	1811	1811
Adj Flow Rate, veh/h	541	414	0	871	608	0	124	881	0	93	871	0
Peak Hour Factor	0.97	0.97	0.97	0.97	0.97	0.97	0.97	0.97	0.97	0.97	0.97	0.97
Percent Heavy Veh, %	4	4	4	3	3	3	5	5	5	6	6	6
Cap, veh/h	755	396		1278	671		149	997		119	945	
Arrive On Green	0.22	0.22	0.00	0.36	0.36	0.00	0.09	0.20	0.00	0.07	0.19	0.00
Sat Flow, veh/h	3506	1841	1560	3534	1856	1572	1739	4985	1547	1725	4944	1535
Grp Volume(v), veh/h	541	414	0	871	608	0	124	881	0	93	871	0
Grp Sat Flow(s),veh/h/ln	1753	1841	1560	1767	1856	1572	1739	1662	1547	1725	1648	1535
Q Serve(g_s), s	18.6	28.0	0.0	27.1	40.5	0.0	9.1	22.3	0.0	6.9	22.5	0.0
Cycle Q Clear(g_c), s	18.6	28.0	0.0	27.1	40.5	0.0	9.1	22.3	0.0	6.9	22.5	0.0
Prop In Lane	1.00		1.00	1.00		1.00	1.00		1.00	1.00		1.00
Lane Grp Cap(c), veh/h	755	396		1278	671		149	997		119	945	
V/C Ratio(X)	0.72	1.04		0.68	0.91		0.83	0.88		0.78	0.92	
Avail Cap(c_a), veh/h	755	396		1278	671		227	997		133	945	
HCM Platoon Ratio	1.00	1.00	1.00	1.00	1.00	1.00	1.00	1.00	1.00	1.00	1.00	1.00
Upstream Filter(I)	1.00	1.00	0.00	0.68	0.68	0.00	0.09	0.09	0.00	1.00	1.00	0.00
Uniform Delay (d), s/veh	47.3	51.0	0.0	35.2	39.4	0.0	58.5	50.5	0.0	59.5	51.6	0.0
Incr Delay (d2), s/veh	5.8	57.2	0.0	2.0	13.4	0.0	1.5	1.2	0.0	24.9	15.6	0.0
Initial Q Delay(d3),s/veh	0.0	0.0	0.0	0.0	0.0	0.0	0.0	0.0	0.0	0.0	0.0	0.0
%ile BackOfQ(50%),veh/ln	8.7	19.0	0.0	11.9	20.5	0.0	4.1	9.4	0.0	3.8	10.6	0.0
Unsig. Movement Delay, s/veh												
LnGrp Delay(d),s/veh	53.1	108.2	0.0	37.2	52.8	0.0	60.0	51.7	0.0	84.4	67.2	0.0
LnGrp LOS	D	F		D	D		E	D		F	E	
Approach Vol, veh/h		955	A		1479	A		1005	A		964	A
Approach Delay, s/veh		77.0			43.6			52.8			68.8	
Approach LOS		E			D			D			E	

Timer - Assigned Phs		2	3	4		6	7	8				
Phs Duration (G+Y+Rc), s		52.0	15.2	29.8		33.0	14.0	31.0				
Change Period (Y+Rc), s		5.0	4.0	5.0		5.0	5.0	* 5				
Max Green Setting (Gmax), s		47.0	17.0	19.0		28.0	10.0	* 26				
Max Q Clear Time (g_c+I1), s		42.5	11.1	24.5		30.0	8.9	24.3				
Green Ext Time (p_c), s		4.4	0.2	0.0		0.0	0.0	1.3				

Intersection Summary	
HCM 6th Ctrl Delay	58.5
HCM 6th LOS	E

Notes

User approved volume balancing among the lanes for turning movement.
* HCM 6th computational engine requires equal clearance times for the phases crossing the barrier.
User approved changes to right turn type.

Movement	EBL	EBT	EBR	WBL	WBT	WBR	NBL	NBT	NBR	SBL	SBT	SBR
Lane Configurations												
Traffic Volume (veh/h)	85	1160	5	5	1440	5	30	5	10	5	5	135
Future Volume (veh/h)	85	1160	5	5	1440	5	30	5	10	5	5	135
Initial Q (Qb), veh	0	0	0	0	0	0	0	0	0	0	0	0
Ped-Bike Adj(A_pbT)	1.00		1.00	1.00		1.00	1.00		1.00	1.00		1.00
Parking Bus, Adj	1.00	1.00	1.00	1.00	1.00	1.00	1.00	1.00	1.00	1.00	1.00	1.00
Work Zone On Approach		No			No			No			No	
Adj Sat Flow, veh/h/ln	1856	1856	1856	1856	1856	1856	1900	1900	1900	1885	1885	1885
Adj Flow Rate, veh/h	91	1247	5	5	1548	5	32	5	11	5	5	145
Peak Hour Factor	0.93	0.93	0.93	0.93	0.93	0.93	0.93	0.93	0.93	0.93	0.93	0.93
Percent Heavy Veh, %	3	3	3	3	3	3	0	0	0	1	1	1
Cap, veh/h	112	2692	11	11	2488	8	183	56	123	115	102	170
Arrive On Green	0.13	1.00	1.00	0.01	0.69	0.69	0.11	0.11	0.11	0.11	0.11	0.11
Sat Flow, veh/h	1767	3601	14	1767	3605	12	1257	528	1162	690	961	1598
Grp Volume(v), veh/h	91	610	642	5	757	796	32	0	16	10	0	145
Grp Sat Flow(s),veh/h/ln	1767	1763	1853	1767	1763	1853	1257	0	1691	1651	0	1598
Q Serve(g_s), s	6.5	0.0	0.0	0.4	30.3	30.3	3.1	0.0	1.1	0.0	0.0	11.6
Cycle Q Clear(g_c), s	6.5	0.0	0.0	0.4	30.3	30.3	3.7	0.0	1.1	0.6	0.0	11.6
Prop In Lane	1.00		0.01	1.00		0.01	1.00		0.69	0.50		1.00
Lane Grp Cap(c), veh/h	112	1318	1385	11	1217	1280	183	0	180	217	0	170
V/C Ratio(X)	0.81	0.46	0.46	0.45	0.62	0.62	0.17	0.00	0.09	0.05	0.00	0.85
Avail Cap(c_a), veh/h	155	1318	1385	155	1217	1280	359	0	416	257	0	209
HCM Platoon Ratio	2.00	2.00	2.00	1.00	1.00	1.00	1.00	1.00	1.00	1.00	1.00	1.00
Upstream Filter(I)	0.49	0.49	0.49	1.00	1.00	1.00	1.00	0.00	1.00	1.00	0.00	1.00
Uniform Delay (d), s/veh	56.0	0.0	0.0	64.4	10.9	10.9	53.9	0.0	52.4	52.2	0.0	57.1
Incr Delay (d2), s/veh	10.6	0.3	0.3	25.3	2.4	2.3	0.6	0.0	0.3	0.1	0.0	25.8
Initial Q Delay(d3),s/veh	0.0	0.0	0.0	0.0	0.0	0.0	0.0	0.0	0.0	0.0	0.0	0.0
%ile BackOfQ(50%),veh/ln	3.1	0.1	0.1	0.2	11.5	12.1	1.0	0.0	0.5	0.3	0.0	5.9
Unsig. Movement Delay, s/veh												
LnGrp Delay(d),s/veh	66.6	0.3	0.3	89.6	13.3	13.2	54.5	0.0	52.7	52.3	0.0	82.9
LnGrp LOS	E	A	A	F	B	B	D	A	D	D	A	F
Approach Vol, veh/h		1343			1558			48			155	
Approach Delay, s/veh		4.8			13.5			53.9			80.9	
Approach LOS		A			B			D			F	

Timer - Assigned Phs	1	2		4	5	6		8
Phs Duration (G+Y+Rc), s	14.9	96.3		18.8	7.4	103.8		18.8
Change Period (Y+Rc), s	6.6	6.6		5.0	6.6	6.6		5.0
Max Green Setting (Gmax), s	11.4	68.4		32.0	11.4	68.4		17.0
Max Q Clear Time (g_c+I1), s	8.5	32.3		5.7	2.4	2.0		13.6
Green Ext Time (p_c), s	0.1	35.8		0.2	0.0	32.5		0.2

Intersection Summary	
HCM 6th Ctrl Delay	13.7
HCM 6th LOS	B

Movement	EBL	EBT	EBR	WBL	WBT	WBR	NBL	NBT	NBR	SBL	SBT	SBR
Lane Configurations												
Traffic Volume (veh/h)	25	1095	55	30	1265	25	160	15	85	45	10	25
Future Volume (veh/h)	25	1095	55	30	1265	25	160	15	85	45	10	25
Initial Q (Qb), veh	0	0	0	0	0	0	0	0	0	0	0	0
Ped-Bike Adj(A_pbT)	1.00		0.99	1.00		0.99	1.00		0.98	1.00		0.94
Parking Bus, Adj	1.00	1.00	1.00	1.00	1.00	1.00	1.00	1.00	1.00	1.00	1.00	1.00
Work Zone On Approach		No			No			No			No	
Adj Sat Flow, veh/h/ln	1796	1796	1796	1856	1856	1856	1870	1870	1870	1826	1826	1826
Adj Flow Rate, veh/h	26	1117	56	31	1291	26	163	15	87	46	10	26
Peak Hour Factor	0.98	0.98	0.98	0.98	0.98	0.98	0.98	0.98	0.98	0.98	0.98	0.98
Percent Heavy Veh, %	7	7	7	3	3	3	2	2	2	5	5	5
Cap, veh/h	40	2228	112	46	2390	48	201	26	153	71	18	46
Arrive On Green	0.02	0.67	0.67	0.05	1.00	1.00	0.11	0.11	0.11	0.04	0.04	0.04
Sat Flow, veh/h	1711	3306	166	1767	3534	71	1781	234	1357	1739	429	1115
Grp Volume(v), veh/h	26	576	597	31	644	673	163	0	102	46	0	36
Grp Sat Flow(s),veh/h/ln	1711	1706	1765	1767	1763	1842	1781	0	1591	1739	0	1544
Q Serve(g_s), s	2.0	21.6	21.6	2.2	0.0	0.0	11.6	0.0	7.9	3.4	0.0	3.0
Cycle Q Clear(g_c), s	2.0	21.6	21.6	2.2	0.0	0.0	11.6	0.0	7.9	3.4	0.0	3.0
Prop In Lane	1.00		0.09	1.00		0.04	1.00		0.85	1.00		0.72
Lane Grp Cap(c), veh/h	40	1150	1190	46	1192	1246	201	0	180	71	0	63
V/C Ratio(X)	0.65	0.50	0.50	0.68	0.54	0.54	0.81	0.00	0.57	0.64	0.00	0.57
Avail Cap(c_a), veh/h	184	1150	1190	190	1192	1246	247	0	220	241	0	214
HCM Platoon Ratio	1.00	1.00	1.00	2.00	2.00	2.00	1.00	1.00	1.00	1.00	1.00	1.00
Upstream Filter(I)	1.00	1.00	1.00	0.82	0.82	0.82	1.00	0.00	1.00	1.00	0.00	1.00
Uniform Delay (d), s/veh	62.9	10.4	10.4	61.1	0.0	0.0	56.3	0.0	54.7	61.4	0.0	61.2
Incr Delay (d2), s/veh	16.3	1.6	1.5	13.4	1.4	1.4	16.9	0.0	4.0	12.9	0.0	10.8
Initial Q Delay(d3),s/veh	0.0	0.0	0.0	0.0	0.0	0.0	0.0	0.0	0.0	0.0	0.0	0.0
%ile BackOfQ(50%),veh/ln	1.0	8.0	8.3	1.2	0.5	0.5	6.2	0.0	3.4	1.8	0.0	1.4
Unsig. Movement Delay, s/veh												
LnGrp Delay(d),s/veh	79.2	12.0	12.0	74.5	1.4	1.4	73.3	0.0	58.6	74.3	0.0	72.0
LnGrp LOS	E	B	B	E	A	A	E	A	E	E	A	E
Approach Vol, veh/h		1199			1348			265			82	
Approach Delay, s/veh		13.4			3.1			67.6			73.3	
Approach LOS		B			A			E			E	

Timer - Assigned Phs	1	2		4	5	6		8
Phs Duration (G+Y+Rc), s	7.0	92.9		19.7	7.4	92.6		10.3
Change Period (Y+Rc), s	4.0	5.0		5.0	4.0	5.0		5.0
Max Green Setting (Gmax), s	14.0	61.0		18.0	14.0	61.0		18.0
Max Q Clear Time (g_c+I1), s	4.0	2.0		13.6	4.2	23.6		5.4
Green Ext Time (p_c), s	0.0	45.6		0.5	0.0	27.3		0.2

Intersection Summary	
HCM 6th Ctrl Delay	15.3
HCM 6th LOS	B

Notes

User approved pedestrian interval to be less than phase max green.

Movement	EBL	EBT	EBR	WBL	WBT	WBR	NBL	NBT	NBR	SBL	SBT	SBR
Lane Configurations												
Traffic Volume (veh/h)	20	1130	80	20	1250	95	60	10	25	60	5	10
Future Volume (veh/h)	20	1130	80	20	1250	95	60	10	25	60	5	10
Initial Q (Qb), veh	0	0	0	0	0	0	0	0	0	0	0	0
Ped-Bike Adj(A_pbT)	1.00		1.00	1.00		1.00	1.00		1.00	1.00		1.00
Parking Bus, Adj	1.00	1.00	1.00	1.00	1.00	1.00	1.00	1.00	1.00	1.00	1.00	1.00
Work Zone On Approach		No			No			No			No	
Adj Sat Flow, veh/h/ln	1841	1841	1841	1870	1870	1870	1307	1307	1307	1826	1826	1826
Adj Flow Rate, veh/h	21	1165	82	21	1289	98	62	10	26	62	5	10
Peak Hour Factor	0.97	0.97	0.97	0.97	0.97	0.97	0.97	0.97	0.97	0.97	0.97	0.97
Percent Heavy Veh, %	4	4	4	2	2	2	40	40	40	5	5	5
Cap, veh/h	36	2395	168	36	2419	183	110	19	30	220	16	262
Arrive On Green	0.04	1.00	1.00	0.02	0.72	0.72	0.15	0.15	0.15	0.15	0.15	0.15
Sat Flow, veh/h	1753	3314	233	1781	3347	254	436	125	203	1116	105	1544
Grp Volume(v), veh/h	21	614	633	21	683	704	98	0	0	67	0	10
Grp Sat Flow(s),veh/h/ln	1753	1749	1799	1781	1777	1824	764	0	0	1221	0	1544
Q Serve(g_s), s	1.5	0.0	0.0	1.5	22.5	22.7	10.7	0.0	0.0	0.0	0.0	0.7
Cycle Q Clear(g_c), s	1.5	0.0	0.0	1.5	22.5	22.7	17.2	0.0	0.0	6.5	0.0	0.7
Prop In Lane	1.00		0.13	1.00		0.14	0.63		0.27	0.93		1.00
Lane Grp Cap(c), veh/h	36	1264	1300	36	1284	1318	159	0	0	236	0	262
V/C Ratio(X)	0.59	0.49	0.49	0.58	0.53	0.53	0.62	0.00	0.00	0.28	0.00	0.04
Avail Cap(c_a), veh/h	94	1264	1300	69	1284	1318	196	0	0	284	0	317
HCM Platoon Ratio	2.00	2.00	2.00	1.00	1.00	1.00	1.00	1.00	1.00	1.00	1.00	1.00
Upstream Filter(I)	0.80	0.80	0.80	1.00	1.00	1.00	1.00	0.00	0.00	1.00	0.00	1.00
Uniform Delay (d), s/veh	61.8	0.0	0.0	63.1	8.1	8.1	56.3	0.0	0.0	49.8	0.0	45.1
Incr Delay (d2), s/veh	11.6	1.1	1.0	13.6	1.6	1.6	3.8	0.0	0.0	0.7	0.0	0.1
Initial Q Delay(d3),s/veh	0.0	0.0	0.0	0.0	0.0	0.0	0.0	0.0	0.0	0.0	0.0	0.0
%ile BackOfQ(50%),veh/ln	0.8	0.4	0.4	0.8	8.2	8.5	3.4	0.0	0.0	2.0	0.0	0.3
Unsig. Movement Delay, s/veh												
LnGrp Delay(d),s/veh	73.4	1.1	1.0	76.7	9.7	9.7	60.1	0.0	0.0	50.4	0.0	45.2
LnGrp LOS	E	A	A	E	A	A	E	A	A	D	A	D
Approach Vol, veh/h		1268			1408			98			77	
Approach Delay, s/veh		2.3			10.7			60.1			49.7	
Approach LOS		A			B			E			D	

Timer - Assigned Phs	1	2		4	5	6		8
Phs Duration (G+Y+Rc), s	6.7	98.9		24.4	6.7	98.9		24.4
Change Period (Y+Rc), s	4.0	5.0		5.0	4.0	5.0		5.0
Max Green Setting (Gmax), s	7.0	85.0		24.0	5.0	87.0		24.0
Max Q Clear Time (g_c+I1), s	3.5	24.7		8.5	3.5	2.0		19.2
Green Ext Time (p_c), s	0.0	49.7		0.1	0.0	65.1		0.1

Intersection Summary	
HCM 6th Ctrl Delay	9.7
HCM 6th LOS	A

Notes

User approved pedestrian interval to be less than phase max green.

Movement	EBL	EBT	EBR	WBL	WBT	WBR	NBL	NBT	NBR	SBL	SBT	SBR
Lane Configurations												
Traffic Volume (veh/h)	10	1006	5	5	1351	10	10	0	5	10	0	5
Future Volume (veh/h)	10	1006	5	5	1351	10	10	0	5	10	0	5
Initial Q (Qb), veh	0	0	0	0	0	0	0	0	0	0	0	0
Ped-Bike Adj(A_pbT)	1.00		1.00	1.00		1.00	1.00		1.00	1.00		1.00
Parking Bus, Adj	1.00	1.00	1.00	1.00	1.00	1.00	1.00	1.00	1.00	1.00	1.00	1.00
Work Zone On Approach		No			No			No			No	
Adj Sat Flow, veh/h/ln	1796	1796	1796	1781	1781	1781	1796	1796	1796	1633	1633	1633
Adj Flow Rate, veh/h	11	1130	6	6	1518	11	11	0	6	11	0	6
Peak Hour Factor	0.89	0.89	0.89	0.89	0.89	0.89	0.89	0.89	0.89	0.89	0.89	0.89
Percent Heavy Veh, %	7	7	7	8	8	8	7	7	7	18	18	18
Cap, veh/h	24	2344	1046	13	2305	1028	110	0	49	110	0	45
Arrive On Green	0.01	0.69	0.69	0.01	0.68	0.68	0.03	0.00	0.03	0.03	0.00	0.03
Sat Flow, veh/h	1711	3413	1522	1697	3385	1510	0	0	1522	0	0	1384
Grp Volume(v), veh/h	11	1130	6	6	1518	11	11	0	6	11	0	6
Grp Sat Flow(s),veh/h/ln	1711	1706	1522	1697	1692	1510	0	0	1522	0	0	1384
Q Serve(g_s), s	0.4	10.1	0.1	0.2	16.9	0.2	0.0	0.0	0.2	0.0	0.0	0.3
Cycle Q Clear(g_c), s	0.4	10.1	0.1	0.2	16.9	0.2	2.1	0.0	0.2	2.1	0.0	0.3
Prop In Lane	1.00		1.00	1.00		1.00	1.00		1.00	1.00		1.00
Lane Grp Cap(c), veh/h	24	2344	1046	13	2305	1028	110	0	49	110	0	45
V/C Ratio(X)	0.46	0.48	0.01	0.45	0.66	0.01	0.10	0.00	0.12	0.10	0.00	0.13
Avail Cap(c_a), veh/h	131	2782	1241	130	2759	1231	709	0	723	410	0	382
HCM Platoon Ratio	1.00	1.00	1.00	1.00	1.00	1.00	1.00	1.00	1.00	1.00	1.00	1.00
Upstream Filter(I)	1.00	1.00	1.00	1.00	1.00	1.00	1.00	0.00	1.00	1.00	0.00	1.00
Uniform Delay (d), s/veh	31.9	4.8	3.2	32.2	6.0	3.3	32.6	0.0	30.7	32.6	0.0	30.7
Incr Delay (d2), s/veh	13.5	0.3	0.0	21.7	0.8	0.0	0.4	0.0	1.1	0.8	0.0	2.8
Initial Q Delay(d3),s/veh	0.0	0.0	0.0	0.0	0.0	0.0	0.0	0.0	0.0	0.0	0.0	0.0
%ile BackOfQ(50%),veh/ln	0.3	2.5	0.0	0.2	4.3	0.0	0.2	0.0	0.1	0.2	0.0	0.1
Unsig. Movement Delay, s/veh												
LnGrp Delay(d),s/veh	45.4	5.1	3.2	53.9	6.8	3.4	33.0	0.0	31.7	33.5	0.0	33.5
LnGrp LOS	D	A	A	D	A	A	C	A	C	C	A	C
Approach Vol, veh/h		1147			1535			17			17	
Approach Delay, s/veh		5.5			7.0			32.6			33.5	
Approach LOS		A			A			C			C	

Timer - Assigned Phs	1	2		4	5	6		8
Phs Duration (G+Y+Rc), s	7.3	50.8		7.1	6.9	51.2		7.1
Change Period (Y+Rc), s	6.4	6.4		5.0	6.4	6.4		5.0
Max Green Setting (Gmax), s	5.0	53.2		18.0	5.0	53.2		31.0
Max Q Clear Time (g_c+I1), s	2.4	18.9		4.1	2.2	12.1		4.1
Green Ext Time (p_c), s	0.0	25.5		0.0	0.0	20.7		0.0

Intersection Summary	
HCM 6th Ctrl Delay	6.7
HCM 6th LOS	A

Intersection	
Int Delay, s/veh	2.6

Movement	EBL	EBT	WBT	WBR	SBL	SBR
Lane Configurations						
Traffic Vol, veh/h	39	100	105	10	5	37
Future Vol, veh/h	39	100	105	10	5	37
Conflicting Peds, #/hr	0	0	0	0	0	0
Sign Control	Free	Free	Free	Free	Stop	Stop
RT Channelized	-	None	-	None	-	None
Storage Length	450	-	-	-	0	-
Veh in Median Storage, #	-	0	0	-	0	-
Grade, %	-	0	0	-	0	-
Peak Hour Factor	78	78	78	78	78	78
Heavy Vehicles, %	86	86	77	77	54	54
Mvmt Flow	50	128	135	13	6	47

Major/Minor	Major1		Major2		Minor2	
Conflicting Flow All	148	0	-	0	370	142
Stage 1	-	-	-	-	142	-
Stage 2	-	-	-	-	228	-
Critical Hdwy	4.96	-	-	-	6.94	6.74
Critical Hdwy Stg 1	-	-	-	-	5.94	-
Critical Hdwy Stg 2	-	-	-	-	5.94	-
Follow-up Hdwy	2.974	-	-	-	3.986	3.786
Pot Cap-1 Maneuver	1049	-	-	-	539	785
Stage 1	-	-	-	-	772	-
Stage 2	-	-	-	-	702	-
Platoon blocked, %		-	-	-		
Mov Cap-1 Maneuver	1049	-	-	-	513	785
Mov Cap-2 Maneuver	-	-	-	-	513	-
Stage 1	-	-	-	-	735	-
Stage 2	-	-	-	-	702	-

Approach	EB	WB	SB
HCM Control Delay, s	2.4	0	10.3
HCM LOS			B

Minor Lane/Major Mvmt	EBL	EBT	WBT	WBR	SBLn1
Capacity (veh/h)	1049	-	-	-	738
HCM Lane V/C Ratio	0.048	-	-	-	0.073
HCM Control Delay (s)	8.6	-	-	-	10.3
HCM Lane LOS	A	-	-	-	B
HCM 95th %tile Q(veh)	0.1	-	-	-	0.2

Intersection	
Int Delay, s/veh	4.4

Movement	EBL	EBT	EBR	WBL	WBT	WBR	NBL	NBT	NBR	SBL	SBT	SBR
Lane Configurations												
Traffic Vol, veh/h	35	129	40	15	122	5	50	0	10	5	10	35
Future Vol, veh/h	35	129	40	15	122	5	50	0	10	5	10	35
Conflicting Peds, #/hr	0	0	0	0	0	0	0	0	0	0	0	0
Sign Control	Free	Free	Free	Free	Free	Free	Stop	Stop	Stop	Stop	Stop	Stop
RT Channelized	-	-	None	-	-	None	-	-	None	-	-	None
Storage Length	-	-	-	-	-	-	-	-	-	-	-	-
Veh in Median Storage, #	-	0	-	-	0	-	-	0	-	-	0	-
Grade, %	-	0	-	-	0	-	-	0	-	-	0	-
Peak Hour Factor	81	81	81	81	81	81	81	81	81	81	81	81
Heavy Vehicles, %	36	36	36	30	30	30	35	35	35	91	91	91
Mvmt Flow	43	159	49	19	151	6	62	0	12	6	12	43

Major/Minor	Major1			Major2			Minor1			Minor2		
Conflicting Flow All	157	0	0	208	0	0	490	465	104	358	486	154
Stage 1	-	-	-	-	-	-	270	270	-	192	192	-
Stage 2	-	-	-	-	-	-	220	195	-	166	294	-
Critical Hdwy	4.64	-	-	4.55	-	-	7.825	7.025	7.425	8.665	7.865	7.565
Critical Hdwy Stg 1	-	-	-	-	-	-	7.025	6.025	-	7.465	6.865	-
Critical Hdwy Stg 2	-	-	-	-	-	-	6.625	6.025	-	7.865	6.865	-
Follow-up Hdwy	2.542	-	-	2.485	-	-	3.8325	4.3325	3.6325	4.3645	4.8645	4.1645
Pot Cap-1 Maneuver	1222	-	-	1196	-	-	416	438	842	430	349	683
Stage 1	-	-	-	-	-	-	638	619	-	621	583	-
Stage 2	-	-	-	-	-	-	703	673	-	634	512	-
Platoon blocked, %		-	-		-	-						
Mov Cap-1 Maneuver	1222	-	-	1196	-	-	362	413	842	405	329	683
Mov Cap-2 Maneuver	-	-	-	-	-	-	362	413	-	405	329	-
Stage 1	-	-	-	-	-	-	612	594	-	596	573	-
Stage 2	-	-	-	-	-	-	633	662	-	600	492	-

Approach	EB	WB	NB	SB
HCM Control Delay, s	1.4	0.9	16	12.7
HCM LOS			C	B

Minor Lane/Major Mvmt	NBLn1	EBL	EBT	EBR	WBL	WBT	WBR	SBLn1
Capacity (veh/h)	400	1222	-	-	1196	-	-	532
HCM Lane V/C Ratio	0.185	0.035	-	-	0.015	-	-	0.116
HCM Control Delay (s)	16	8.1	0.1	-	8.1	0	-	12.7
HCM Lane LOS	C	A	A	-	A	A	-	B
HCM 95th %tile Q(veh)	0.7	0.1	-	-	0	-	-	0.4

Movement	WBL	WBR	NBT	NBR	SBL	SBT
Lane Configurations						
Traffic Volume (veh/h)	76	136	430	101	118	440
Future Volume (veh/h)	76	136	430	101	118	440
Initial Q (Qb), veh	0	0	0	0	0	0
Ped-Bike Adj(A_pbT)	1.00	1.00		1.00	1.00	
Parking Bus, Adj	1.00	1.00	1.00	1.00	1.00	1.00
Work Zone On Approach	No		No			No
Adj Sat Flow, veh/h/ln	1233	1233	1796	1796	1678	1678
Adj Flow Rate, veh/h	83	148	467	110	128	478
Peak Hour Factor	0.92	0.92	0.92	0.92	0.92	0.92
Percent Heavy Veh, %	45	45	7	7	15	15
Cap, veh/h	94	167	529	125	275	895
Arrive On Green	0.24	0.24	0.38	0.38	0.07	0.53
Sat Flow, veh/h	389	694	1406	331	1598	1678
Grp Volume(v), veh/h	232	0	0	577	128	478
Grp Sat Flow(s),veh/h/ln	1089	0	0	1737	1598	1678
Q Serve(g_s), s	13.1	0.0	0.0	19.8	2.9	11.9
Cycle Q Clear(g_c), s	13.1	0.0	0.0	19.8	2.9	11.9
Prop In Lane	0.36	0.64		0.19	1.00	
Lane Grp Cap(c), veh/h	262	0	0	654	275	895
V/C Ratio(X)	0.89	0.00	0.00	0.88	0.47	0.53
Avail Cap(c_a), veh/h	405	0	0	736	291	972
HCM Platoon Ratio	1.00	1.00	1.00	1.00	1.00	1.00
Upstream Filter(I)	1.00	0.00	0.00	1.00	1.00	1.00
Uniform Delay (d), s/veh	23.3	0.0	0.0	18.5	13.9	9.7
Incr Delay (d2), s/veh	13.8	0.0	0.0	11.8	1.7	0.7
Initial Q Delay(d3),s/veh	0.0	0.0	0.0	0.0	0.0	0.0
%ile BackOfQ(50%),veh/ln	4.1	0.0	0.0	9.2	1.0	3.8
Unsig. Movement Delay, s/veh						
LnGrp Delay(d),s/veh	37.1	0.0	0.0	30.4	15.6	10.4
LnGrp LOS	D	A	A	C	B	B
Approach Vol, veh/h	232		577			606
Approach Delay, s/veh	37.1		30.4			11.5
Approach LOS	D		C			B

Timer - Assigned Phs	1	2				6	8
Phs Duration (G+Y+Rc), s	10.0	32.1				42.1	21.6
Change Period (Y+Rc), s	5.5	* 8.1				* 8.1	6.3
Max Green Setting (Gmax), s	5.1	* 27				* 37	23.7
Max Q Clear Time (g_c+I1), s	4.9	21.8				13.9	15.1
Green Ext Time (p_c), s	0.0	2.2				4.5	0.5

Intersection Summary	
HCM 6th Ctrl Delay	23.4
HCM 6th LOS	C

Notes

User approved pedestrian interval to be less than phase max green.

User approved volume balancing among the lanes for turning movement.

* HCM 6th computational engine requires equal clearance times for the phases crossing the barrier.

Movement	EBL	EBR	NBL	NBT	SBT	SBR
Lane Configurations						
Traffic Volume (vph)	70	70	90	435	375	90
Future Volume (vph)	70	70	90	435	375	90
Ideal Flow (vphpl)	1900	1900	1900	1900	1900	1900
Total Lost time (s)	5.0	5.0	6.5	6.5	6.5	6.5
Lane Util. Factor	1.00	1.00	1.00	1.00	1.00	1.00
Frt	1.00	0.85	1.00	1.00	1.00	0.85
Flt Protected	0.95	1.00	0.95	1.00	1.00	1.00
Satd. Flow (prot)	1671	1495	1719	1810	1792	1524
Flt Permitted	0.95	1.00	0.39	1.00	1.00	1.00
Satd. Flow (perm)	1671	1495	698	1810	1792	1524
Peak-hour factor, PHF	0.96	0.96	0.96	0.96	0.96	0.96
Adj. Flow (vph)	73	73	94	453	391	94
RTOR Reduction (vph)	0	65	0	0	0	44
Lane Group Flow (vph)	73	8	94	453	391	50
Heavy Vehicles (%)	8%	8%	5%	5%	6%	6%
Turn Type	custom	custom	pm+pt	NA	NA	Perm
Protected Phases	3	3	5	2	6	
Permitted Phases	4	4	2			6
Actuated Green, G (s)	5.5	5.5	34.9	34.9	22.9	22.9
Effective Green, g (s)	5.5	5.5	34.9	34.9	22.9	22.9
Actuated g/C Ratio	0.11	0.11	0.67	0.67	0.44	0.44
Clearance Time (s)	5.0	5.0	6.5	6.5	6.5	6.5
Vehicle Extension (s)	2.0	2.0	2.0	5.0	5.0	5.0
Lane Grp Cap (vph)	177	158	577	1217	790	672
v/s Ratio Prot	c0.04	0.01	0.02	c0.25	c0.22	
v/s Ratio Perm			0.09			0.03
v/c Ratio	0.41	0.05	0.16	0.37	0.49	0.08
Uniform Delay, d1	21.7	20.8	3.6	3.7	10.4	8.4
Progression Factor	1.00	1.00	1.00	1.00	1.00	1.00
Incremental Delay, d2	0.6	0.0	0.0	0.4	1.0	0.1
Delay (s)	22.3	20.9	3.7	4.1	11.4	8.5
Level of Service	C	C	A	A	B	A
Approach Delay (s)	21.6			4.0	10.8	
Approach LOS	C			A	B	

Intersection Summary			
HCM 2000 Control Delay	9.0	HCM 2000 Level of Service	A
HCM 2000 Volume to Capacity ratio	0.55		
Actuated Cycle Length (s)	51.9	Sum of lost time (s)	21.0
Intersection Capacity Utilization	43.9%	ICU Level of Service	A
Analysis Period (min)	15		
c Critical Lane Group			

Movement	EBL	EBR	NBL	NBT	SBT	SBR
Lane Configurations						
Traffic Volume (vph)	145	10	10	340	290	115
Future Volume (vph)	145	10	10	340	290	115
Ideal Flow (vphpl)	1900	1900	1900	1900	1900	1900
Total Lost time (s)	5.0	5.0	6.0	6.0	6.0	5.0
Lane Util. Factor	1.00	1.00	1.00	1.00	1.00	1.00
Frpb, ped/bikes	1.00	1.00	1.00	1.00	1.00	0.99
Flpb, ped/bikes	1.00	1.00	1.00	1.00	1.00	1.00
Frt	1.00	0.85	1.00	1.00	1.00	0.85
Flt Protected	0.95	1.00	0.95	1.00	1.00	1.00
Satd. Flow (prot)	1671	1495	1736	1827	1792	1505
Flt Permitted	0.95	1.00	0.40	1.00	1.00	1.00
Satd. Flow (perm)	1671	1495	723	1827	1792	1505
Peak-hour factor, PHF	0.95	0.95	0.95	0.95	0.95	0.95
Adj. Flow (vph)	153	11	11	358	305	121
RTOR Reduction (vph)	0	9	0	0	0	54
Lane Group Flow (vph)	153	2	11	358	305	67
Confl. Bikes (#/hr)						1
Heavy Vehicles (%)	8%	8%	4%	4%	6%	6%
Turn Type	custom	custom	pm+pt	NA	NA	pm+ov
Protected Phases	3	3	5	2	6	3
Permitted Phases	4	4	2			6
Actuated Green, G (s)	8.9	8.9	20.0	20.0	13.3	22.2
Effective Green, g (s)	8.9	8.9	20.0	20.0	13.3	22.2
Actuated g/C Ratio	0.22	0.22	0.50	0.50	0.33	0.56
Clearance Time (s)	5.0	5.0	6.0	6.0	6.0	5.0
Vehicle Extension (s)	2.0	2.0	2.0	2.0	2.0	2.0
Lane Grp Cap (vph)	372	333	380	915	597	837
v/s Ratio Prot	c0.09	0.00	0.00	c0.20	c0.17	0.02
v/s Ratio Perm			0.01			0.03
v/c Ratio	0.41	0.01	0.03	0.39	0.51	0.08
Uniform Delay, d1	13.3	12.1	5.5	6.2	10.7	4.1
Progression Factor	1.00	1.00	1.00	1.00	1.00	1.00
Incremental Delay, d2	0.3	0.0	0.0	0.1	0.3	0.0
Delay (s)	13.5	12.1	5.5	6.3	11.0	4.1
Level of Service	B	B	A	A	B	A
Approach Delay (s)	13.4			6.3	9.0	
Approach LOS	B			A	A	

Intersection Summary			
HCM 2000 Control Delay	8.7	HCM 2000 Level of Service	A
HCM 2000 Volume to Capacity ratio	0.61		
Actuated Cycle Length (s)	39.9	Sum of lost time (s)	20.0
Intersection Capacity Utilization	35.1%	ICU Level of Service	A
Analysis Period (min)	15		

c Critical Lane Group

Intersection	
Int Delay, s/veh	1.1

Movement	EBL	EBT	EBR	WBL	WBT	WBR	NBL	NBT	NBR	SBL	SBT	SBR
Lane Configurations												
Traffic Vol, veh/h	0	0	0	25	0	15	20	230	0	0	100	165
Future Vol, veh/h	0	0	0	25	0	15	20	230	0	0	100	165
Conflicting Peds, #/hr	0	0	0	0	0	0	0	0	0	0	0	0
Sign Control	Stop	Stop	Stop	Stop	Stop	Stop	Free	Free	Free	Free	Free	Free
RT Channelized	-	-	None	-	-	None	-	-	None	-	-	None
Storage Length	-	-	-	-	-	500	175	-	-	-	-	375
Veh in Median Storage, #	-	1	-	-	0	-	-	0	-	-	0	-
Grade, %	-	0	-	-	0	-	-	0	-	-	0	-
Peak Hour Factor	92	92	92	92	92	92	92	92	92	92	92	92
Heavy Vehicles, %	0	0	0	7	7	7	6	6	6	4	4	4
Mvmt Flow	0	0	0	27	0	16	22	250	0	0	109	179

Major/Minor	Minor1		Major1		Major2				
Conflicting Flow All	493	582	250	288	0	-	-	-	0
Stage 1	294	294	-	-	-	-	-	-	-
Stage 2	199	288	-	-	-	-	-	-	-
Critical Hdwy	6.47	6.57	6.27	4.16	-	-	-	-	-
Critical Hdwy Stg 1	5.47	5.57	-	-	-	-	-	-	-
Critical Hdwy Stg 2	5.47	5.57	-	-	-	-	-	-	-
Follow-up Hdwy	3.563	4.063	3.363	2.254	-	-	-	-	-
Pot Cap-1 Maneuver	526	418	777	1251	-	0	0	-	-
Stage 1	745	661	-	-	-	0	0	-	-
Stage 2	823	665	-	-	-	0	0	-	-
Platoon blocked, %					-			-	-
Mov Cap-1 Maneuver	517	0	777	1251	-	-	-	-	-
Mov Cap-2 Maneuver	517	0	-	-	-	-	-	-	-
Stage 1	732	0	-	-	-	-	-	-	-
Stage 2	823	0	-	-	-	-	-	-	-

Approach	WB	NB	SB
HCM Control Delay, s	11.3	0.6	0
HCM LOS	B		

Minor Lane/Major Mvmt	NBL	NBT	WBLn1	WBLn2	SBT	SBR
Capacity (veh/h)	1251	-	517	777	-	-
HCM Lane V/C Ratio	0.017	-	0.053	0.021	-	-
HCM Control Delay (s)	7.9	-	12.3	9.7	-	-
HCM Lane LOS	A	-	B	A	-	-
HCM 95th %tile Q(veh)	0.1	-	0.2	0.1	-	-

Movement	EBL	EBR	NBL	NBT	SBT	SBR
Lane Configurations						
Traffic Volume (veh/h)	160	10	25	110	115	15
Future Volume (veh/h)	160	10	25	110	115	15
Initial Q (Qb), veh	0	0	0	0	0	0
Ped-Bike Adj(A_pbT)	1.00	1.00	1.00			0.98
Parking Bus, Adj	1.00	1.00	1.00	1.00	1.00	1.00
Work Zone On Approach	No			No	No	
Adj Sat Flow, veh/h/ln	1841	1841	1811	1811	1752	1752
Adj Flow Rate, veh/h	184	11	29	126	132	17
Peak Hour Factor	0.87	0.87	0.87	0.87	0.87	0.87
Percent Heavy Veh, %	4	4	6	6	10	10
Cap, veh/h	391	348	234	259	297	38
Arrive On Green	0.22	0.22	0.20	0.20	0.20	0.20
Sat Flow, veh/h	1753	1560	188	1325	1516	195
Grp Volume(v), veh/h	184	11	155	0	0	149
Grp Sat Flow(s),veh/h/ln	1753	1560	1513	0	0	1712
Q Serve(g_s), s	2.0	0.1	0.5	0.0	0.0	1.7
Cycle Q Clear(g_c), s	2.0	0.1	2.2	0.0	0.0	1.7
Prop In Lane	1.00	1.00	0.19			0.11
Lane Grp Cap(c), veh/h	391	348	493	0	0	335
V/C Ratio(X)	0.47	0.03	0.31	0.00	0.00	0.44
Avail Cap(c_a), veh/h	3937	3503	4645	0	0	2660
HCM Platoon Ratio	1.00	1.00	1.00	1.00	1.00	1.00
Upstream Filter(I)	1.00	1.00	1.00	0.00	0.00	1.00
Uniform Delay (d), s/veh	7.3	6.6	7.8	0.0	0.0	7.7
Incr Delay (d2), s/veh	0.9	0.0	0.8	0.0	0.0	2.0
Initial Q Delay(d3),s/veh	0.0	0.0	0.0	0.0	0.0	0.0
%ile BackOfQ(50%),veh/ln	0.5	0.0	0.4	0.0	0.0	0.5
Unsig. Movement Delay, s/veh						
LnGrp Delay(d),s/veh	8.2	6.6	8.6	0.0	0.0	9.6
LnGrp LOS	A	A	A	A	A	A
Approach Vol, veh/h	195			155	149	
Approach Delay, s/veh	8.1			8.6	9.6	
Approach LOS	A			A	A	

Timer - Assigned Phs		2		4		6
Phs Duration (G+Y+Rc), s		10.5		11.1		10.5
Change Period (Y+Rc), s		6.3		6.3		6.3
Max Green Setting (Gmax), s		58.7		48.7		33.7
Max Q Clear Time (g_c+I1), s		4.2		4.0		3.7
Green Ext Time (p_c), s		2.0		0.6		1.6

Intersection Summary	
HCM 6th Ctrl Delay	8.7
HCM 6th LOS	A

Movement	EBL	EBT	EBR	WBL	WBT	WBR	NBL	NBT	NBR	SBL	SBT	SBR
Lane Configurations												
Traffic Volume (veh/h)	90	10	15	5	0	10	15	556	10	15	523	85
Future Volume (veh/h)	90	10	15	5	0	10	15	556	10	15	523	85
Initial Q (Qb), veh	0	0	0	0	0	0	0	0	0	0	0	0
Ped-Bike Adj(A_pbT)	1.00		0.98	1.00		1.00	1.00		0.98	1.00		1.00
Parking Bus, Adj	1.00	1.00	1.00	1.00	1.00	1.00	1.00	1.00	1.00	1.00	1.00	1.00
Work Zone On Approach		No			No			No			No	
Adj Sat Flow, veh/h/ln	1856	1856	1856	1559	1559	1559	1663	1663	1663	1678	1678	1678
Adj Flow Rate, veh/h	95	11	16	5	0	11	16	585	11	16	551	89
Peak Hour Factor	0.95	0.95	0.95	0.95	0.95	0.95	0.95	0.95	0.95	0.95	0.95	0.95
Percent Heavy Veh, %	3	3	3	23	23	23	16	16	16	15	15	15
Cap, veh/h	224	17	21	299	0	267	287	774	15	267	799	677
Arrive On Green	0.11	0.11	0.11	0.00	0.00	0.20	0.01	0.48	0.48	0.01	0.48	0.48
Sat Flow, veh/h	1103	156	190	1485	0	1321	1584	1626	31	1598	1678	1422
Grp Volume(v), veh/h	122	0	0	5	0	11	16	0	596	16	551	89
Grp Sat Flow(s),veh/h/ln	1449	0	0	1485	0	1321	1584	0	1657	1598	1678	1422
Q Serve(g_s), s	5.0	0.0	0.0	0.2	0.0	0.4	0.3	0.0	18.5	0.3	16.1	2.2
Cycle Q Clear(g_c), s	5.1	0.0	0.0	0.2	0.0	0.4	0.3	0.0	18.5	0.3	16.1	2.2
Prop In Lane	0.78		0.13	1.00		1.00	1.00		0.02	1.00		1.00
Lane Grp Cap(c), veh/h	262	0	0	299	0	267	287	0	789	267	799	677
V/C Ratio(X)	0.47	0.00	0.00	0.02	0.00	0.04	0.06	0.00	0.76	0.06	0.69	0.13
Avail Cap(c_a), veh/h	519	0	0	636	0	928	887	0	1528	745	1413	1198
HCM Platoon Ratio	1.00	1.00	1.00	1.00	1.00	1.00	1.00	1.00	1.00	1.00	1.00	1.00
Upstream Filter(I)	1.00	0.00	0.00	1.00	0.00	1.00	1.00	0.00	1.00	1.00	1.00	1.00
Uniform Delay (d), s/veh	27.1	0.0	0.0	23.0	0.0	20.2	10.4	0.0	13.5	11.1	12.8	9.2
Incr Delay (d2), s/veh	1.8	0.0	0.0	0.0	0.0	0.1	0.1	0.0	3.2	0.1	2.3	0.2
Initial Q Delay(d3),s/veh	0.0	0.0	0.0	0.0	0.0	0.0	0.0	0.0	0.0	0.0	0.0	0.0
%ile BackOfQ(50%),veh/ln	1.8	0.0	0.0	0.1	0.0	0.1	0.1	0.0	6.5	0.1	5.6	0.6
Unsig. Movement Delay, s/veh												
LnGrp Delay(d),s/veh	29.0	0.0	0.0	23.0	0.0	20.3	10.5	0.0	16.6	11.2	15.1	9.4
LnGrp LOS	C	A	A	C	A	C	B	A	B	B	B	A
Approach Vol, veh/h		122			16			612			656	
Approach Delay, s/veh		29.0			21.1			16.5			14.2	
Approach LOS		C			C			B			B	

Timer - Assigned Phs	1	2	3	4	5	6		8
Phs Duration (G+Y+Rc), s	6.2	37.0	5.8	13.8	6.2	37.0		19.6
Change Period (Y+Rc), s	5.5	7.1	5.5	6.9	5.5	7.1		* 6.9
Max Green Setting (Gmax), s	19.5	57.9	14.5	18.1	24.5	52.9		* 44
Max Q Clear Time (g_c+I1), s	2.3	20.5	2.2	7.1	2.3	18.1		2.4
Green Ext Time (p_c), s	0.0	9.4	0.0	0.5	0.0	9.1		0.0

Intersection Summary	
HCM 6th Ctrl Delay	16.6
HCM 6th LOS	B

Notes

* HCM 6th computational engine requires equal clearance times for the phases crossing the barrier.

Movement	EBL	EBT	EBR	WBL	WBT	WBR	NBL	NBT	NBR	SBL	SBT	SBR
Lane Configurations												
Traffic Volume (veh/h)	340	613	65	10	556	130	65	40	15	145	40	335
Future Volume (veh/h)	340	613	65	10	556	130	65	40	15	145	40	335
Initial Q (Qb), veh	0	0	0	0	0	0	0	0	0	0	0	0
Ped-Bike Adj(A_pbT)	1.00		1.00	1.00		1.00	1.00		0.99	1.00		0.99
Parking Bus, Adj	1.00	1.00	1.00	1.00	1.00	1.00	1.00	1.00	1.00	1.00	1.00	1.00
Work Zone On Approach		No			No			No			No	
Adj Sat Flow, veh/h/ln	1767	1767	1767	1767	1767	1767	1885	1885	1885	1826	1826	1826
Adj Flow Rate, veh/h	351	632	67	10	573	134	67	41	15	149	41	345
Peak Hour Factor	0.97	0.97	0.97	0.97	0.97	0.97	0.97	0.97	0.97	0.97	0.97	0.97
Percent Heavy Veh, %	9	9	9	9	9	9	1	1	1	5	5	5
Cap, veh/h	383	1930	859	16	1197	533	86	200	73	176	376	669
Arrive On Green	0.23	0.57	0.57	0.01	0.36	0.36	0.05	0.15	0.15	0.10	0.21	0.21
Sat Flow, veh/h	1682	3357	1495	1682	3357	1493	1795	1314	481	1739	1826	1538
Grp Volume(v), veh/h	351	632	67	10	573	134	67	0	56	149	41	345
Grp Sat Flow(s),veh/h/ln	1682	1678	1495	1682	1678	1493	1795	0	1794	1739	1826	1538
Q Serve(g_s), s	25.1	12.2	2.5	0.7	16.4	7.8	4.6	0.0	3.4	10.4	2.3	20.2
Cycle Q Clear(g_c), s	25.1	12.2	2.5	0.7	16.4	7.8	4.6	0.0	3.4	10.4	2.3	20.2
Prop In Lane	1.00		1.00	1.00		1.00	1.00		0.27	1.00		1.00
Lane Grp Cap(c), veh/h	383	1930	859	16	1197	533	86	0	273	176	376	669
V/C Ratio(X)	0.92	0.33	0.08	0.63	0.48	0.25	0.78	0.00	0.20	0.85	0.11	0.52
Avail Cap(c_a), veh/h	572	1930	859	54	1197	533	160	0	523	268	651	900
HCM Platoon Ratio	1.00	1.00	1.00	1.00	1.00	1.00	1.00	1.00	1.00	1.00	1.00	1.00
Upstream Filter(I)	1.00	1.00	1.00	1.00	1.00	1.00	1.00	0.00	1.00	1.00	1.00	1.00
Uniform Delay (d), s/veh	46.6	13.7	11.7	61.0	30.8	28.1	58.1	0.0	45.8	54.5	39.9	25.6
Incr Delay (d2), s/veh	14.7	0.5	0.2	34.9	1.4	1.1	13.8	0.0	0.4	14.2	0.1	0.6
Initial Q Delay(d3),s/veh	0.0	0.0	0.0	0.0	0.0	0.0	0.0	0.0	0.0	0.0	0.0	0.0
%ile BackOfQ(50%),veh/ln	12.0	4.7	0.9	0.5	6.9	3.0	2.4	0.0	1.5	5.2	1.0	7.5
Unsig. Movement Delay, s/veh												
LnGrp Delay(d),s/veh	61.2	14.2	11.9	95.8	32.2	29.2	71.9	0.0	46.2	68.7	40.0	26.2
LnGrp LOS	E	B	B	F	C	C	E	A	D	E	D	C
Approach Vol, veh/h		1050			717			123			535	
Approach Delay, s/veh		29.8			32.5			60.2			39.1	
Approach LOS		C			C			E			D	

Timer - Assigned Phs	1	2	3	4	5	6	7	8
Phs Duration (G+Y+Rc), s	6.2	76.0	10.9	30.4	33.1	49.1	17.5	23.8
Change Period (Y+Rc), s	5.0	5.0	5.0	5.0	5.0	5.0	5.0	5.0
Max Green Setting (Gmax), s	4.0	71.0	11.0	44.0	42.0	33.0	19.0	36.0
Max Q Clear Time (g_c+I1), s	2.7	14.2	6.6	22.2	27.1	18.4	12.4	5.4
Green Ext Time (p_c), s	0.0	5.4	0.0	1.4	1.0	3.8	0.2	0.3

Intersection Summary	
HCM 6th Ctrl Delay	34.2
HCM 6th LOS	C

Movement	EBT	EBR	WBL	WBT	NBL	NBR
Lane Configurations						
Traffic Volume (veh/h)	718	410	225	726	490	300
Future Volume (veh/h)	718	410	225	726	490	300
Initial Q (Qb), veh	0	0	0	0	0	0
Ped-Bike Adj(A_pbT)		1.00	1.00		1.00	1.00
Parking Bus, Adj	1.00	1.00	1.00	1.00	1.00	1.00
Work Zone On Approach	No			No	No	
Adj Sat Flow, veh/h/ln	1737	1737	1722	1722	1856	1856
Adj Flow Rate, veh/h	740	0	232	748	505	309
Peak Hour Factor	0.97	0.97	0.97	0.97	0.97	0.97
Percent Heavy Veh, %	11	11	12	12	3	3
Cap, veh/h	2704		259	2522	519	486
Arrive On Green	0.57	0.00	0.16	0.77	0.15	0.15
Sat Flow, veh/h	4898	1472	1640	3358	3428	1572
Grp Volume(v), veh/h	740	0	232	748	505	309
Grp Sat Flow(s),veh/h/ln	1581	1472	1640	1636	1714	1572
Q Serve(g_s), s	11.9	0.0	20.8	10.2	22.0	22.7
Cycle Q Clear(g_c), s	11.9	0.0	20.8	10.2	22.0	22.7
Prop In Lane		1.00	1.00		1.00	1.00
Lane Grp Cap(c), veh/h	2704		259	2522	519	486
V/C Ratio(X)	0.27		0.90	0.30	0.97	0.64
Avail Cap(c_a), veh/h	2704		477	2522	519	486
HCM Platoon Ratio	1.00	1.00	1.00	1.00	1.00	1.00
Upstream Filter(I)	1.00	0.00	0.93	0.93	1.00	1.00
Uniform Delay (d), s/veh	16.4	0.0	62.0	5.1	63.3	44.6
Incr Delay (d2), s/veh	0.3	0.0	11.7	0.3	32.7	3.1
Initial Q Delay(d3),s/veh	0.0	0.0	0.0	0.0	0.0	0.0
%ile BackOfQ(50%),veh/ln	4.5	0.0	9.5	3.3	12.0	10.4
Unsig. Movement Delay, s/veh						
LnGrp Delay(d),s/veh	16.7	0.0	73.7	5.4	96.1	47.7
LnGrp LOS	B		E	A	F	D
Approach Vol, veh/h	740	A		980	814	
Approach Delay, s/veh	16.7			21.6	77.7	
Approach LOS	B			C	E	

Timer - Assigned Phs	1	2				6	8
Phs Duration (G+Y+Rc), s	30.1	91.9				122.0	28.0
Change Period (Y+Rc), s	6.4	6.4				6.4	5.3
Max Green Setting (Gmax), s	43.6	65.6				115.6	22.7
Max Q Clear Time (g_c+I1), s	22.8	13.9				12.2	24.7
Green Ext Time (p_c), s	0.8	12.5				13.9	0.0

Intersection Summary	
HCM 6th Ctrl Delay	38.2
HCM 6th LOS	D

Notes

User approved pedestrian interval to be less than phase max green.

Unsignalized Delay for [EBR] is excluded from calculations of the approach delay and intersection delay.

Movement	EBL	EBT	EBR	WBL	WBT	WBR	NBL	NBT	NBR	SBL	SBT	SBR
Lane Configurations												
Traffic Volume (vph)	130	760	0	0	990	495	0	0	397	0	0	630
Future Volume (vph)	130	760	0	0	990	495	0	0	397	0	0	630
Ideal Flow (vphpl)	1900	1900	1900	1900	1900	1900	1900	1900	1900	1900	1900	1900
Total Lost time (s)	5.0	5.0			5.0	5.0			4.0			5.0
Lane Util. Factor	1.00	0.95			0.95	1.00			1.00			1.00
Frpb, ped/bikes	1.00	1.00			1.00	1.00			1.00			1.00
Flpb, ped/bikes	1.00	1.00			1.00	1.00			1.00			1.00
Frt	1.00	1.00			1.00	0.85			0.86			0.86
Flt Protected	0.95	1.00			1.00	1.00			1.00			1.00
Satd. Flow (prot)	1687	3374			3374	1509			1508			1596
Flt Permitted	0.95	1.00			1.00	1.00			1.00			1.00
Satd. Flow (perm)	1687	3374			3374	1509			1508			1596
Peak-hour factor, PHF	0.96	0.96	0.96	0.96	0.96	0.96	0.96	0.96	0.96	0.96	0.96	0.96
Adj. Flow (vph)	135	792	0	0	1031	516	0	0	414	0	0	656
RTOR Reduction (vph)	0	0	0	0	0	0	0	0	0	0	0	36
Lane Group Flow (vph)	135	792	0	0	1031	516	0	0	414	0	0	620
Confl. Peds. (#/hr)	4					4						
Heavy Vehicles (%)	7%	7%	7%	7%	7%	7%	9%	9%	9%	3%	3%	3%
Turn Type	Prot	NA			NA	custom			Free			pt+ov
Protected Phases	1!	1 6 8			6	4 6 8!						1 8
Permitted Phases									Free			8 1
Actuated Green, G (s)	34.5	100.0			55.5	100.0			100.0			34.5
Effective Green, g (s)	34.5	100.0			55.5	100.0			100.0			34.5
Actuated g/C Ratio	0.34	1.00			0.56	1.00			1.00			0.34
Clearance Time (s)	5.0				5.0							
Vehicle Extension (s)	2.0				2.0							
Lane Grp Cap (vph)	582	3374			1872	1509			1508			550
v/s Ratio Prot	0.08	0.23			c0.31	0.34						c0.39
v/s Ratio Perm									0.27			
v/c Ratio	0.23	0.23			0.55	0.34			0.27			1.13
Uniform Delay, d1	23.3	0.0			14.3	0.0			0.0			32.8
Progression Factor	0.76	1.00			1.00	1.00			1.00			1.00
Incremental Delay, d2	0.8	0.0			1.2	0.0			0.5			78.4
Delay (s)	18.4	0.0			15.4	0.0			0.5			111.2
Level of Service	B	A			B	A			A			F
Approach Delay (s)		2.7			10.3			0.5			111.2	
Approach LOS		A			B			A			F	

Intersection Summary			
HCM 2000 Control Delay	25.8	HCM 2000 Level of Service	C
HCM 2000 Volume to Capacity ratio	0.80		
Actuated Cycle Length (s)	100.0	Sum of lost time (s)	13.0
Intersection Capacity Utilization	74.7%	ICU Level of Service	D
Analysis Period (min)	15		

! Phase conflict between lane groups.
c Critical Lane Group

Movement	EBL	EBT	EBR	WBL	WBT	WBR	NBL	NBT	NBR	SBL	SBT	SBR
Lane Configurations												
Traffic Volume (vph)	495	340	75	435	320	865	0	0	0	555	690	435
Future Volume (vph)	495	340	75	435	320	865	0	0	0	555	690	435
Ideal Flow (vphpl)	1900	1900	1900	1900	1900	1900	1900	1900	1900	1900	1900	1900
Total Lost time (s)	5.0	5.0		9.0	9.0	4.0				5.0	5.0	5.0
Lane Util. Factor	0.97	0.95		1.00	0.95	1.00				0.97	0.95	0.95
Frt	1.00	0.97		1.00	1.00	0.85				1.00	1.00	0.85
Flt Protected	0.95	1.00		0.95	1.00	1.00				0.95	1.00	1.00
Satd. Flow (prot)	3400	3409		1687	3374	1509				3273	1687	1434
Flt Permitted	0.95	1.00		0.95	1.00	1.00				0.95	1.00	1.00
Satd. Flow (perm)	3400	3409		1687	3374	1509				3273	1687	1434
Peak-hour factor, PHF	0.98	0.98	0.98	0.98	0.98	0.98	0.98	0.98	0.98	0.98	0.98	0.98
Adj. Flow (vph)	505	347	77	444	327	883	0	0	0	566	704	444
RTOR Reduction (vph)	0	19	0	0	0	6	0	0	0	0	0	0
Lane Group Flow (vph)	505	405	0	444	327	877	0	0	0	566	704	444
Heavy Vehicles (%)	3%	3%	3%	7%	7%	7%	0%	0%	0%	7%	7%	7%
Turn Type	Split	NA		Split	NA	custom				Split	NA	custom
Protected Phases	2	2		3	3	7				4	4	4 5
Permitted Phases						7						
Actuated Green, G (s)	18.0	18.0		28.8	28.8	73.0				34.2	34.2	57.2
Effective Green, g (s)	18.0	18.0		28.8	28.8	73.0				34.2	34.2	57.2
Actuated g/C Ratio	0.18	0.18		0.29	0.29	0.73				0.34	0.34	0.57
Clearance Time (s)	5.0	5.0		9.0	9.0	4.0				5.0	5.0	
Vehicle Extension (s)	4.0	4.0		3.0	3.0	3.0				3.0	3.0	
Lane Grp Cap (vph)	612	613		485	971	1101				1119	576	820
v/s Ratio Prot	c0.15	0.12		0.26	0.10	c0.58				0.17	c0.42	0.31
v/s Ratio Perm												
v/c Ratio	0.83	0.66		0.92	0.34	0.80				0.51	1.22	0.54
Uniform Delay, d1	39.5	38.2		34.4	28.1	8.7				26.2	32.9	13.3
Progression Factor	1.00	1.00		0.76	0.72	1.41				0.54	0.56	0.48
Incremental Delay, d2	12.0	5.5		17.1	0.1	3.0				0.3	110.9	0.5
Delay (s)	51.5	43.7		43.3	20.4	15.2				14.3	129.4	6.9
Level of Service	D	D		D	C	B				B	F	A
Approach Delay (s)		47.9			23.8			0.0			59.7	
Approach LOS		D			C			A			E	

Intersection Summary			
HCM 2000 Control Delay	43.3	HCM 2000 Level of Service	D
HCM 2000 Volume to Capacity ratio	1.05		
Actuated Cycle Length (s)	100.0	Sum of lost time (s)	19.0
Intersection Capacity Utilization	96.8%	ICU Level of Service	F
Analysis Period (min)	15		
c Critical Lane Group			

Movement	EBL	EBT	EBR	WBL	WBT	WBR	NBL	NBT	NBR	SBL	SBT	SBR
Lane Configurations												
Traffic Volume (veh/h)	180	255	145	775	190	205	90	595	675	180	740	90
Future Volume (veh/h)	180	255	145	775	190	205	90	595	675	180	740	90
Initial Q (Qb), veh	0	0	0	0	0	0	0	0	0	0	0	0
Ped-Bike Adj(A_pbT)	1.00		1.00	1.00		1.00	1.00		1.00	1.00		1.00
Parking Bus, Adj	1.00	1.00	1.00	1.00	1.00	1.00	1.00	1.00	1.00	1.00	1.00	1.00
Work Zone On Approach		No			No			No			No	
Adj Sat Flow, veh/h/ln	1856	1856	1856	1856	1856	1856	1841	1841	1841	1767	1767	1767
Adj Flow Rate, veh/h	150	314	0	731	291	0	93	613	0	186	763	0
Peak Hour Factor	0.97	0.97	0.97	0.97	0.97	0.97	0.97	0.97	0.97	0.97	0.97	0.97
Percent Heavy Veh, %	3	3	3	3	3	3	4	4	4	9	9	9
Cap, veh/h	256	537		967	508		120	905		339	1559	
Arrive On Green	0.14	0.14	0.00	0.09	0.09	0.00	0.02	0.06	0.00	0.20	0.32	0.00
Sat Flow, veh/h	1767	3711	1572	3534	1856	1572	1753	5025	1560	1682	4823	1497
Grp Volume(v), veh/h	150	314	0	731	291	0	93	613	0	186	763	0
Grp Sat Flow(s),veh/h/ln	1767	1856	1572	1767	1856	1572	1753	1675	1560	1682	1608	1497
Q Serve(g_s), s	7.9	7.9	0.0	20.2	15.0	0.0	5.3	12.0	0.0	9.9	12.7	0.0
Cycle Q Clear(g_c), s	7.9	7.9	0.0	20.2	15.0	0.0	5.3	12.0	0.0	9.9	12.7	0.0
Prop In Lane	1.00		1.00	1.00		1.00	1.00		1.00	1.00		1.00
Lane Grp Cap(c), veh/h	256	537		967	508		120	905		339	1559	
V/C Ratio(X)	0.59	0.59		0.76	0.57		0.77	0.68		0.55	0.49	
Avail Cap(c_a), veh/h	300	631		990	520		210	905		339	1559	
HCM Platoon Ratio	1.00	1.00	1.00	0.33	0.33	0.33	0.33	0.33	0.33	1.00	1.00	1.00
Upstream Filter(I)	1.00	1.00	0.00	0.88	0.88	0.00	0.49	0.49	0.00	1.00	1.00	0.00
Uniform Delay (d), s/veh	40.0	40.0	0.0	42.2	39.9	0.0	48.1	44.2	0.0	35.8	27.2	0.0
Incr Delay (d2), s/veh	9.5	4.6	0.0	4.3	3.3	0.0	7.3	2.0	0.0	2.4	1.1	0.0
Initial Q Delay(d3),s/veh	0.0	0.0	0.0	0.0	0.0	0.0	0.0	0.0	0.0	0.0	0.0	0.0
%ile BackOfQ(50%),veh/ln	4.1	3.9	0.0	10.1	7.9	0.0	2.6	5.5	0.0	4.3	5.0	0.0
Unsig. Movement Delay, s/veh												
LnGrp Delay(d),s/veh	49.5	44.6	0.0	46.6	43.2	0.0	55.4	46.2	0.0	38.2	28.3	0.0
LnGrp LOS	D	D		D	D		E	D		D	C	
Approach Vol, veh/h		464	A		1022	A		706	A		949	A
Approach Delay, s/veh		46.2			45.6			47.4			30.2	
Approach LOS		D			D			D			C	

Timer - Assigned Phs		2	3	4		6	7	8				
Phs Duration (G+Y+Rc), s		32.4	10.8	37.3		19.5	25.2	23.0				
Change Period (Y+Rc), s		5.0	4.0	5.0		5.0	5.0	* 5				
Max Green Setting (Gmax), s		28.0	12.0	24.0		17.0	18.0	* 18				
Max Q Clear Time (g_c+I1), s		22.2	7.3	14.7		9.9	11.9	14.0				
Green Ext Time (p_c), s		5.2	0.1	6.2		4.5	0.4	2.2				

Intersection Summary	
HCM 6th Ctrl Delay	41.5
HCM 6th LOS	D

Notes

User approved pedestrian interval to be less than phase max green.

User approved volume balancing among the lanes for turning movement.

* HCM 6th computational engine requires equal clearance times for the phases crossing the barrier.

Movement	EBL	EBT	EBR	WBL	WBT	WBR	NBL	NBT	NBR	SBL	SBT	SBR
Lane Configurations												
Traffic Volume (veh/h)	75	1040	5	5	1075	5	10	0	5	10	0	85
Future Volume (veh/h)	75	1040	5	5	1075	5	10	0	5	10	0	85
Initial Q (Qb), veh	0	0	0	0	0	0	0	0	0	0	0	0
Ped-Bike Adj(A_pbT)	1.00		1.00	1.00		1.00	1.00		1.00	1.00		1.00
Parking Bus, Adj	1.00	1.00	1.00	1.00	1.00	1.00	1.00	1.00	1.00	1.00	1.00	1.00
Work Zone On Approach		No			No			No			No	
Adj Sat Flow, veh/h/ln	1841	1841	1841	1870	1870	1870	1900	1900	1900	1826	1826	1826
Adj Flow Rate, veh/h	77	1072	5	5	1108	5	10	0	5	10	0	88
Peak Hour Factor	0.97	0.97	0.97	0.97	0.97	0.97	0.97	0.97	0.97	0.97	0.97	0.97
Percent Heavy Veh, %	4	4	4	2	2	2	0	0	0	5	5	5
Cap, veh/h	99	2574	12	9	2431	11	159	0	111	172	0	117
Arrive On Green	0.07	0.96	0.96	0.01	0.67	0.67	0.08	0.00	0.08	0.08	0.00	0.08
Sat Flow, veh/h	1753	3570	17	1781	3628	16	1155	0	1465	1320	0	1547
Grp Volume(v), veh/h	77	525	552	5	543	570	10	0	5	10	0	88
Grp Sat Flow(s),veh/h/ln	1753	1749	1838	1781	1777	1867	1155	0	1465	1320	0	1547
Q Serve(g_s), s	4.3	2.0	2.0	0.3	14.5	14.5	0.7	0.0	0.3	0.7	0.0	5.6
Cycle Q Clear(g_c), s	4.3	2.0	2.0	0.3	14.5	14.5	1.7	0.0	0.3	1.0	0.0	5.6
Prop In Lane	1.00		0.01	1.00		0.01	1.00		1.00	1.00		1.00
Lane Grp Cap(c), veh/h	99	1261	1325	9	1190	1251	159	0	111	172	0	117
V/C Ratio(X)	0.78	0.42	0.42	0.54	0.46	0.46	0.06	0.00	0.05	0.06	0.00	0.75
Avail Cap(c_a), veh/h	200	1261	1325	78	1190	1251	343	0	314	362	0	331
HCM Platoon Ratio	1.33	1.33	1.33	1.00	1.00	1.00	1.00	1.00	1.00	1.00	1.00	1.00
Upstream Filter(I)	0.56	0.56	0.56	1.00	1.00	1.00	1.00	0.00	1.00	1.00	0.00	1.00
Uniform Delay (d), s/veh	45.6	0.6	0.6	49.6	7.8	7.8	44.0	0.0	42.9	43.3	0.0	45.3
Incr Delay (d2), s/veh	7.3	0.6	0.5	41.4	1.3	1.2	0.2	0.0	0.2	0.2	0.0	12.8
Initial Q Delay(d3),s/veh	0.0	0.0	0.0	0.0	0.0	0.0	0.0	0.0	0.0	0.0	0.0	0.0
%ile BackOfQ(50%),veh/ln	2.0	0.6	0.6	0.2	5.2	5.4	0.2	0.0	0.1	0.2	0.0	2.6
Unsig. Movement Delay, s/veh												
LnGrp Delay(d),s/veh	52.9	1.2	1.2	91.0	9.1	9.0	44.2	0.0	43.1	43.5	0.0	58.1
LnGrp LOS	D	A	A	F	A	A	D	A	D	D	A	E
Approach Vol, veh/h		1154			1118			15			98	
Approach Delay, s/veh		4.6			9.4			43.8			56.7	
Approach LOS		A			A			D			E	

Timer - Assigned Phs	1	2		4	5	6		8
Phs Duration (G+Y+Rc), s	12.2	73.6		14.2	7.1	78.7		14.2
Change Period (Y+Rc), s	6.6	6.6		6.6	6.6	6.6		6.6
Max Green Setting (Gmax), s	11.4	47.4		21.4	4.4	54.4		21.4
Max Q Clear Time (g_c+I1), s	6.3	16.5		3.7	2.3	4.0		7.6
Green Ext Time (p_c), s	0.1	29.0		0.0	0.0	11.7		0.3

Intersection Summary	
HCM 6th Ctrl Delay	9.3
HCM 6th LOS	A

Movement	EBL	EBT	EBR	WBL	WBT	WBR	NBL	NBT	NBR	SBL	SBT	SBR
Lane Configurations												
Traffic Volume (veh/h)	10	970	70	35	970	5	85	10	35	5	5	25
Future Volume (veh/h)	10	970	70	35	970	5	85	10	35	5	5	25
Initial Q (Qb), veh	0	0	0	0	0	0	0	0	0	0	0	0
Ped-Bike Adj(A_pbT)	1.00		1.00	1.00		1.00	1.00		1.00	1.00		0.99
Parking Bus, Adj	1.00	1.00	1.00	1.00	1.00	1.00	1.00	1.00	1.00	1.00	1.00	1.00
Work Zone On Approach		No			No			No			No	
Adj Sat Flow, veh/h/ln	1841	1841	1841	1811	1811	1811	1841	1841	1841	1900	1900	1900
Adj Flow Rate, veh/h	11	1032	74	37	1032	5	90	11	37	5	5	27
Peak Hour Factor	0.94	0.94	0.94	0.94	0.94	0.94	0.94	0.94	0.94	0.94	0.94	0.94
Percent Heavy Veh, %	4	4	4	6	6	6	4	4	4	0	0	0
Cap, veh/h	672	2222	159	55	1089	5	130	27	92	58	8	44
Arrive On Green	0.38	0.67	0.67	0.02	0.21	0.21	0.07	0.07	0.07	0.03	0.03	0.03
Sat Flow, veh/h	1753	3309	237	1725	3512	17	1753	369	1242	1810	256	1385
Grp Volume(v), veh/h	11	545	561	37	506	531	90	0	48	5	0	32
Grp Sat Flow(s),veh/h/ln	1753	1749	1798	1725	1721	1808	1753	0	1611	1810	0	1641
Q Serve(g_s), s	0.4	14.9	14.9	2.1	29.0	29.0	5.0	0.0	2.8	0.3	0.0	1.9
Cycle Q Clear(g_c), s	0.4	14.9	14.9	2.1	29.0	29.0	5.0	0.0	2.8	0.3	0.0	1.9
Prop In Lane	1.00		0.13	1.00		0.01	1.00		0.77	1.00		0.84
Lane Grp Cap(c), veh/h	672	1174	1207	55	533	560	130	0	120	58	0	53
V/C Ratio(X)	0.02	0.46	0.46	0.67	0.95	0.95	0.69	0.00	0.40	0.09	0.00	0.61
Avail Cap(c_a), veh/h	672	1174	1207	241	533	560	316	0	290	326	0	295
HCM Platoon Ratio	1.00	1.00	1.00	0.67	0.67	0.67	1.00	1.00	1.00	1.00	1.00	1.00
Upstream Filter(I)	1.00	1.00	1.00	0.93	0.93	0.93	1.00	0.00	1.00	1.00	0.00	1.00
Uniform Delay (d), s/veh	19.1	7.8	7.8	48.4	38.8	38.8	45.2	0.0	44.2	47.0	0.0	47.8
Incr Delay (d2), s/veh	0.0	1.3	1.3	12.2	26.7	25.9	8.9	0.0	3.1	0.9	0.0	15.0
Initial Q Delay(d3),s/veh	0.0	0.0	0.0	0.0	0.0	0.0	0.0	0.0	0.0	0.0	0.0	0.0
%ile BackOfQ(50%),veh/ln	0.2	5.2	5.3	1.1	16.5	17.2	2.5	0.0	1.2	0.1	0.0	1.0
Unsig. Movement Delay, s/veh												
LnGrp Delay(d),s/veh	19.1	9.2	9.1	60.5	65.5	64.7	54.1	0.0	47.2	47.9	0.0	62.8
LnGrp LOS	B	A	A	E	E	E	D	A	D	D	A	E
Approach Vol, veh/h		1117			1074			138			37	
Approach Delay, s/veh		9.2			64.9			51.7			60.8	
Approach LOS		A			E			D			E	

Timer - Assigned Phs	1	2		4	5	6		8
Phs Duration (G+Y+Rc), s	43.4	36.0		12.4	7.2	72.1		8.2
Change Period (Y+Rc), s	5.0	* 5		5.0	4.0	5.0		5.0
Max Green Setting (Gmax), s	14.0	* 31		18.0	14.0	31.0		18.0
Max Q Clear Time (g_c+I1), s	2.4	31.0		7.0	4.1	16.9		3.9
Green Ext Time (p_c), s	0.0	0.0		0.4	0.0	11.6		0.1

Intersection Summary	
HCM 6th Ctrl Delay	37.8
HCM 6th LOS	D

Notes

User approved pedestrian interval to be less than phase max green.

* HCM 6th computational engine requires equal clearance times for the phases crossing the barrier.

Movement	EBL	EBT	EBR	WBL	WBT	WBR	NBL	NBT	NBR	SBL	SBT	SBR
Lane Configurations												
Traffic Volume (veh/h)	25	950	30	25	930	45	45	5	25	60	5	30
Future Volume (veh/h)	25	950	30	25	930	45	45	5	25	60	5	30
Initial Q (Qb), veh	0	0	0	0	0	0	0	0	0	0	0	0
Ped-Bike Adj(A_pbT)	1.00		1.00	1.00		1.00	1.00		1.00	1.00		1.00
Parking Bus, Adj	1.00	1.00	1.00	1.00	1.00	1.00	1.00	1.00	1.00	1.00	1.00	1.00
Work Zone On Approach		No			No			No			No	
Adj Sat Flow, veh/h/ln	1856	1856	1856	1870	1870	1870	1470	1470	1470	1826	1826	1826
Adj Flow Rate, veh/h	26	990	31	26	969	47	47	5	26	62	5	31
Peak Hour Factor	0.96	0.96	0.96	0.96	0.96	0.96	0.96	0.96	0.96	0.96	0.96	0.96
Percent Heavy Veh, %	3	3	3	2	2	2	29	29	29	5	5	5
Cap, veh/h	45	2482	78	46	2453	119	108	18	34	210	14	230
Arrive On Green	0.05	1.00	1.00	0.03	0.71	0.71	0.12	0.12	0.12	0.12	0.12	0.12
Sat Flow, veh/h	1767	3489	109	1781	3450	167	411	142	277	1144	116	1544
Grp Volume(v), veh/h	26	500	521	26	499	517	78	0	0	67	0	31
Grp Sat Flow(s),veh/h/ln	1767	1763	1836	1781	1777	1840	830	0	0	1260	0	1544
Q Serve(g_s), s	1.4	0.0	0.0	1.4	11.3	11.3	5.1	0.0	0.0	0.0	0.0	1.7
Cycle Q Clear(g_c), s	1.4	0.0	0.0	1.4	11.3	11.3	10.0	0.0	0.0	5.0	0.0	1.7
Prop In Lane	1.00		0.06	1.00		0.09	0.60		0.33	0.93		1.00
Lane Grp Cap(c), veh/h	45	1254	1306	46	1264	1309	160	0	0	224	0	230
V/C Ratio(X)	0.57	0.40	0.40	0.57	0.39	0.39	0.49	0.00	0.00	0.30	0.00	0.13
Avail Cap(c_a), veh/h	194	1254	1306	338	1264	1309	260	0	0	344	0	364
HCM Platoon Ratio	2.00	2.00	2.00	1.00	1.00	1.00	1.00	1.00	1.00	1.00	1.00	1.00
Upstream Filter(I)	0.86	0.86	0.86	1.00	1.00	1.00	1.00	0.00	0.00	1.00	0.00	1.00
Uniform Delay (d), s/veh	46.9	0.0	0.0	48.2	5.8	5.8	43.7	0.0	0.0	40.6	0.0	37.0
Incr Delay (d2), s/veh	9.4	0.8	0.8	10.6	0.9	0.9	2.3	0.0	0.0	0.7	0.0	0.3
Initial Q Delay(d3),s/veh	0.0	0.0	0.0	0.0	0.0	0.0	0.0	0.0	0.0	0.0	0.0	0.0
%ile BackOfQ(50%),veh/ln	0.7	0.3	0.3	0.8	3.7	3.9	2.0	0.0	0.0	1.6	0.0	0.7
Unsig. Movement Delay, s/veh												
LnGrp Delay(d),s/veh	56.3	0.8	0.8	58.7	6.7	6.7	46.0	0.0	0.0	41.3	0.0	37.2
LnGrp LOS	E	A	A	E	A	A	D	A	A	D	A	D
Approach Vol, veh/h		1047			1042			78			98	
Approach Delay, s/veh		2.2			8.0			46.0			40.0	
Approach LOS		A			A			D			D	

Timer - Assigned Phs	1	2		4	5	6		8
Phs Duration (G+Y+Rc), s	6.6	76.1		17.3	6.6	76.1		17.3
Change Period (Y+Rc), s	4.0	5.0		5.0	4.0	5.0		5.0
Max Green Setting (Gmax), s	11.0	54.0		21.0	19.0	46.0		21.0
Max Q Clear Time (g_c+I1), s	3.4	13.3		7.0	3.4	2.0		12.0
Green Ext Time (p_c), s	0.0	27.7		0.2	0.0	32.5		0.1

Intersection Summary	
HCM 6th Ctrl Delay	8.0
HCM 6th LOS	A

Notes

User approved pedestrian interval to be less than phase max green.

Movement	EBL	EBT	EBR	WBL	WBT	WBR	NBL	NBT	NBR	SBL	SBT	SBR
Lane Configurations												
Traffic Volume (veh/h)	15	988	10	5	936	15	10	0	10	15	0	10
Future Volume (veh/h)	15	988	10	5	936	15	10	0	10	15	0	10
Initial Q (Qb), veh	0	0	0	0	0	0	0	0	0	0	0	0
Ped-Bike Adj(A_pbT)	1.00		1.00	1.00		1.00	1.00		1.00	1.00		1.00
Parking Bus, Adj	1.00	1.00	1.00	1.00	1.00	1.00	1.00	1.00	1.00	1.00	1.00	1.00
Work Zone On Approach		No			No			No			No	
Adj Sat Flow, veh/h/ln	1781	1781	1781	1796	1796	1796	1781	1781	1781	1826	1826	1826
Adj Flow Rate, veh/h	16	1074	11	5	1017	16	11	0	11	16	0	11
Peak Hour Factor	0.92	0.92	0.92	0.92	0.92	0.92	0.92	0.92	0.92	0.92	0.92	0.92
Percent Heavy Veh, %	8	8	8	7	7	7	8	8	8	5	5	5
Cap, veh/h	34	1978	882	11	1949	869	148	0	64	148	0	65
Arrive On Green	0.02	0.58	0.58	0.01	0.57	0.57	0.04	0.00	0.04	0.04	0.00	0.04
Sat Flow, veh/h	1697	3385	1510	1711	3413	1522	0	0	1510	0	0	1547
Grp Volume(v), veh/h	16	1074	11	5	1017	16	11	0	11	16	0	11
Grp Sat Flow(s),veh/h/ln	1697	1692	1510	1711	1706	1522	0	0	1510	0	0	1547
Q Serve(g_s), s	0.5	9.4	0.1	0.1	8.8	0.2	0.0	0.0	0.3	0.0	0.0	0.3
Cycle Q Clear(g_c), s	0.5	9.4	0.1	0.1	8.8	0.2	2.1	0.0	0.3	2.1	0.0	0.3
Prop In Lane	1.00		1.00	1.00		1.00	1.00		1.00	1.00		1.00
Lane Grp Cap(c), veh/h	34	1978	882	11	1949	869	148	0	64	148	0	65
V/C Ratio(X)	0.47	0.54	0.01	0.44	0.52	0.02	0.07	0.00	0.17	0.11	0.00	0.17
Avail Cap(c_a), veh/h	175	3012	1344	176	3037	1355	945	0	964	598	0	574
HCM Platoon Ratio	1.00	1.00	1.00	1.00	1.00	1.00	1.00	1.00	1.00	1.00	1.00	1.00
Upstream Filter(I)	1.00	1.00	1.00	1.00	1.00	1.00	1.00	0.00	1.00	1.00	0.00	1.00
Uniform Delay (d), s/veh	23.5	6.1	4.2	24.0	6.4	4.5	24.3	0.0	22.4	24.3	0.0	22.4
Incr Delay (d2), s/veh	9.8	0.5	0.0	23.8	0.5	0.0	0.2	0.0	1.3	0.7	0.0	2.6
Initial Q Delay(d3),s/veh	0.0	0.0	0.0	0.0	0.0	0.0	0.0	0.0	0.0	0.0	0.0	0.0
%ile BackOfQ(50%),veh/ln	0.3	2.3	0.0	0.1	2.2	0.1	0.1	0.0	0.1	0.2	0.0	0.2
Unsig. Movement Delay, s/veh												
LnGrp Delay(d),s/veh	33.4	6.6	4.2	47.9	6.8	4.5	24.5	0.0	23.7	24.9	0.0	25.0
LnGrp LOS	C	A	A	D	A	A	C	A	C	C	A	C
Approach Vol, veh/h		1101			1038			22			27	
Approach Delay, s/veh		7.0			7.0			24.1			25.0	
Approach LOS		A			A			C			C	

Timer - Assigned Phs	1	2		4	5	6		8
Phs Duration (G+Y+Rc), s	7.4	34.1		7.1	6.7	34.8		7.1
Change Period (Y+Rc), s	6.4	6.4		5.0	6.4	6.4		5.0
Max Green Setting (Gmax), s	5.0	43.2		18.0	5.0	43.2		31.0
Max Q Clear Time (g_c+I1), s	2.5	10.8		4.1	2.1	11.4		4.1
Green Ext Time (p_c), s	0.0	16.1		0.1	0.0	17.0		0.0

Intersection Summary	
HCM 6th Ctrl Delay	7.4
HCM 6th LOS	A

Intersection	
Int Delay, s/veh	2.7

Movement	EBL	EBT	WBT	WBR	SBL	SBR
Lane Configurations						
Traffic Vol, veh/h	22	115	190	5	16	70
Future Vol, veh/h	22	115	190	5	16	70
Conflicting Peds, #/hr	0	0	0	0	0	0
Sign Control	Free	Free	Free	Free	Stop	Stop
RT Channelized	-	None	-	None	-	None
Storage Length	450	-	-	-	0	-
Veh in Median Storage, #	-	0	0	-	0	-
Grade, %	-	0	0	-	0	-
Peak Hour Factor	80	80	80	80	80	80
Heavy Vehicles, %	8	8	2	2	15	15
Mvmt Flow	28	144	238	6	20	88

Major/Minor	Major1		Major2		Minor2	
Conflicting Flow All	244	0	-	0	441	241
Stage 1	-	-	-	-	241	-
Stage 2	-	-	-	-	200	-
Critical Hdwy	4.18	-	-	-	6.55	6.35
Critical Hdwy Stg 1	-	-	-	-	5.55	-
Critical Hdwy Stg 2	-	-	-	-	5.55	-
Follow-up Hdwy	2.272	-	-	-	3.635	3.435
Pot Cap-1 Maneuver	1288	-	-	-	550	767
Stage 1	-	-	-	-	770	-
Stage 2	-	-	-	-	804	-
Platoon blocked, %		-	-	-		
Mov Cap-1 Maneuver	1288	-	-	-	538	767
Mov Cap-2 Maneuver	-	-	-	-	538	-
Stage 1	-	-	-	-	753	-
Stage 2	-	-	-	-	804	-

Approach	EB	WB	SB
HCM Control Delay, s	1.3	0	11
HCM LOS			B

Minor Lane/Major Mvmt	EBL	EBT	WBT	WBR	SBLn1
Capacity (veh/h)	1288	-	-	-	711
HCM Lane V/C Ratio	0.021	-	-	-	0.151
HCM Control Delay (s)	7.9	-	-	-	11
HCM Lane LOS	A	-	-	-	B
HCM 95th %tile Q(veh)	0.1	-	-	-	0.5

Intersection	
Int Delay, s/veh	2.7

Movement	EBL	EBT	EBR	WBL	WBT	WBR	NBL	NBT	NBR	SBL	SBT	SBR
Lane Configurations												
Traffic Vol, veh/h	5	122	70	80	185	5	20	0	10	5	5	10
Future Vol, veh/h	5	122	70	80	185	5	20	0	10	5	5	10
Conflicting Peds, #/hr	0	0	0	0	0	0	0	0	0	0	0	0
Sign Control	Free	Free	Free	Free	Free	Free	Stop	Stop	Stop	Stop	Stop	Stop
RT Channelized	-	-	None	-	-	None	-	-	None	-	-	None
Storage Length	-	-	-	-	-	-	-	-	-	-	-	-
Veh in Median Storage, #	-	0	-	-	0	-	-	0	-	-	0	-
Grade, %	-	0	-	-	0	-	-	0	-	-	0	-
Peak Hour Factor	81	81	81	81	81	81	81	81	81	81	81	81
Heavy Vehicles, %	9	9	9	7	7	7	0	0	0	53	53	53
Mvmt Flow	6	151	86	99	228	6	25	0	12	6	6	12

Major/Minor	Major1			Major2			Minor1			Minor2		
Conflicting Flow All	234	0	0	237	0	0	644	638	119	517	678	231
Stage 1	-	-	-	-	-	-	206	206	-	429	429	-
Stage 2	-	-	-	-	-	-	438	432	-	88	249	-
Critical Hdwy	4.235	-	-	4.205	-	-	7.3	6.5	6.9	8.095	7.295	6.995
Critical Hdwy Stg 1	-	-	-	-	-	-	6.5	5.5	-	6.895	6.295	-
Critical Hdwy Stg 2	-	-	-	-	-	-	6.1	5.5	-	7.295	6.295	-
Follow-up Hdwy	2.2855	-	-	2.2665	-	-	3.5	4	3.3	4.0035	4.5035	3.8035
Pot Cap-1 Maneuver	1287	-	-	1296	-	-	375	397	917	370	300	681
Stage 1	-	-	-	-	-	-	782	735	-	497	488	-
Stage 2	-	-	-	-	-	-	601	586	-	790	602	-
Platoon blocked, %		-	-		-	-						
Mov Cap-1 Maneuver	1287	-	-	1296	-	-	336	360	917	339	272	681
Mov Cap-2 Maneuver	-	-	-	-	-	-	336	360	-	339	272	-
Stage 1	-	-	-	-	-	-	778	731	-	495	445	-
Stage 2	-	-	-	-	-	-	531	534	-	775	599	-

Approach	EB	WB	NB	SB
HCM Control Delay, s	0.2	2.4	14.3	14.2
HCM LOS			B	B

Minor Lane/Major Mvmt	NBLn1	EBL	EBT	EBR	WBL	WBT	WBR	SBLn1
Capacity (veh/h)	426	1287	-	-	1296	-	-	418
HCM Lane V/C Ratio	0.087	0.005	-	-	0.076	-	-	0.059
HCM Control Delay (s)	14.3	7.8	0	-	8	0	-	14.2
HCM Lane LOS	B	A	A	-	A	A	-	B
HCM 95th %tile Q(veh)	0.3	0	-	-	0.2	-	-	0.2

Movement	WBL	WBR	NBT	NBR	SBL	SBT
Lane Configurations						
Traffic Volume (veh/h)	108	102	425	66	146	1185
Future Volume (veh/h)	108	102	425	66	146	1185
Initial Q (Qb), veh	0	0	0	0	0	0
Ped-Bike Adj(A_pbT)	1.00	1.00		1.00	1.00	
Parking Bus, Adj	1.00	1.00	1.00	1.00	1.00	1.00
Work Zone On Approach	No		No			No
Adj Sat Flow, veh/h/ln	1781	1781	1826	1826	1885	1885
Adj Flow Rate, veh/h	116	110	457	71	157	1274
Peak Hour Factor	0.93	0.93	0.93	0.93	0.93	0.93
Percent Heavy Veh, %	8	8	5	5	1	1
Cap, veh/h	128	122	992	154	571	1377
Arrive On Green	0.16	0.16	0.64	0.64	0.04	0.73
Sat Flow, veh/h	818	776	1543	240	1795	1885
Grp Volume(v), veh/h	227	0	0	528	157	1274
Grp Sat Flow(s),veh/h/ln	1601	0	0	1783	1795	1885
Q Serve(g_s), s	17.8	0.0	0.0	19.2	3.6	71.9
Cycle Q Clear(g_c), s	17.8	0.0	0.0	19.2	3.6	71.9
Prop In Lane	0.51	0.48		0.13	1.00	
Lane Grp Cap(c), veh/h	251	0	0	1147	571	1377
V/C Ratio(X)	0.90	0.00	0.00	0.46	0.27	0.92
Avail Cap(c_a), veh/h	300	0	0	1256	588	1496
HCM Platoon Ratio	1.00	1.00	1.00	1.00	1.00	1.00
Upstream Filter(I)	1.00	0.00	0.00	1.00	1.00	1.00
Uniform Delay (d), s/veh	53.0	0.0	0.0	11.6	8.3	14.3
Incr Delay (d2), s/veh	26.0	0.0	0.0	0.4	0.4	9.9
Initial Q Delay(d3),s/veh	0.0	0.0	0.0	0.0	0.0	0.0
%ile BackOfQ(50%),veh/ln	9.0	0.0	0.0	7.5	1.4	30.1
Unsig. Movement Delay, s/veh						
LnGrp Delay(d),s/veh	79.0	0.0	0.0	12.0	8.7	24.2
LnGrp LOS	E	A	A	B	A	C
Approach Vol, veh/h	227		528			1431
Approach Delay, s/veh	79.0		12.0			22.5
Approach LOS	E		B			C

Timer - Assigned Phs	1	2				6	8
Phs Duration (G+Y+Rc), s	11.2	90.4				101.6	26.4
Change Period (Y+Rc), s	5.5	* 8.1				* 8.1	6.3
Max Green Setting (Gmax), s	6.9	* 90				* 1E2	24.0
Max Q Clear Time (g_c+I1), s	5.6	21.2				73.9	19.8
Green Ext Time (p_c), s	0.1	6.2				19.6	0.3

Intersection Summary	
HCM 6th Ctrl Delay	25.8
HCM 6th LOS	C

Notes

User approved pedestrian interval to be less than phase max green.

User approved volume balancing among the lanes for turning movement.

* HCM 6th computational engine requires equal clearance times for the phases crossing the barrier.

Movement	EBL	EBR	NBL	NBT	SBT	SBR
Lane Configurations						
Traffic Volume (vph)	55	280	80	331	1285	90
Future Volume (vph)	55	280	80	331	1285	90
Ideal Flow (vphpl)	1900	1900	1900	1900	1900	1900
Total Lost time (s)	5.0	5.0	6.5	6.5	6.5	6.5
Lane Util. Factor	1.00	1.00	1.00	1.00	1.00	1.00
Frt	1.00	0.85	1.00	1.00	1.00	0.85
Flt Protected	0.95	1.00	0.95	1.00	1.00	1.00
Satd. Flow (prot)	1752	1568	1787	1881	1881	1599
Flt Permitted	0.95	1.00	0.02	1.00	1.00	1.00
Satd. Flow (perm)	1752	1568	42	1881	1881	1599
Peak-hour factor, PHF	0.94	0.94	0.94	0.94	0.94	0.94
Adj. Flow (vph)	59	298	85	352	1367	96
RTOR Reduction (vph)	0	91	0	0	0	6
Lane Group Flow (vph)	59	207	85	352	1367	90
Heavy Vehicles (%)	3%	3%	1%	1%	1%	1%
Turn Type	custom	custom	pm+pt	NA	NA	Perm
Protected Phases	3	3	5	2	6	
Permitted Phases	4	4	2			6
Actuated Green, G (s)	35.7	35.7	192.8	192.8	173.8	173.8
Effective Green, g (s)	35.7	35.7	192.8	192.8	173.8	173.8
Actuated g/C Ratio	0.15	0.15	0.80	0.80	0.72	0.72
Clearance Time (s)	5.0	5.0	6.5	6.5	6.5	6.5
Vehicle Extension (s)	2.0	2.0	2.0	5.0	5.0	5.0
Lane Grp Cap (vph)	260	233	124	1511	1362	1157
v/s Ratio Prot	0.03	c0.13	c0.04	0.19	c0.73	
v/s Ratio Perm			0.52			0.06
v/c Ratio	0.23	0.89	0.69	0.23	1.00	0.08
Uniform Delay, d1	90.0	100.2	91.7	5.7	33.1	9.7
Progression Factor	1.00	1.00	0.97	1.65	1.00	1.00
Incremental Delay, d2	0.2	30.1	11.5	0.4	25.3	0.1
Delay (s)	90.2	130.3	100.1	9.8	58.4	9.8
Level of Service	F	F	F	A	E	A
Approach Delay (s)	123.6			27.3	55.2	
Approach LOS	F			C	E	

Intersection Summary			
HCM 2000 Control Delay	60.6	HCM 2000 Level of Service	E
HCM 2000 Volume to Capacity ratio	0.98		
Actuated Cycle Length (s)	240.0	Sum of lost time (s)	21.0
Intersection Capacity Utilization	94.6%	ICU Level of Service	F
Analysis Period (min)	15		
c Critical Lane Group			

Movement	EBL	EBR	NBL	NBT	SBT	SBR
Lane Configurations						
Traffic Volume (vph)	121	20	10	270	1225	245
Future Volume (vph)	121	20	10	270	1225	245
Ideal Flow (vphpl)	1900	1900	1900	1900	1900	1900
Total Lost time (s)	5.0	5.0	6.0	6.0	6.0	5.0
Lane Util. Factor	1.00	1.00	1.00	1.00	1.00	1.00
Frt	1.00	0.85	1.00	1.00	1.00	0.85
Flt Protected	0.95	1.00	0.95	1.00	1.00	1.00
Satd. Flow (prot)	1787	1599	1787	1881	1881	1599
Flt Permitted	0.95	1.00	0.04	1.00	1.00	1.00
Satd. Flow (perm)	1787	1599	79	1881	1881	1599
Peak-hour factor, PHF	0.91	0.91	0.91	0.91	0.91	0.91
Adj. Flow (vph)	133	22	11	297	1346	269
RTOR Reduction (vph)	0	20	0	0	0	22
Lane Group Flow (vph)	133	2	11	297	1346	247
Heavy Vehicles (%)	1%	1%	1%	1%	1%	1%
Turn Type	custom	custom	pm+pt	NA	NA	pm+ov
Protected Phases	3	3	5	2	6	3
Permitted Phases	4	4	2			6
Actuated Green, G (s)	13.3	13.3	95.7	95.7	88.7	102.0
Effective Green, g (s)	13.3	13.3	95.7	95.7	88.7	102.0
Actuated g/C Ratio	0.11	0.11	0.80	0.80	0.74	0.85
Clearance Time (s)	5.0	5.0	6.0	6.0	6.0	5.0
Vehicle Extension (s)	2.0	2.0	2.0	2.0	2.0	2.0
Lane Grp Cap (vph)	198	177	77	1500	1390	1359
v/s Ratio Prot	c0.07	0.00	0.00	c0.16	c0.72	0.02
v/s Ratio Perm			0.11			0.13
v/c Ratio	0.67	0.01	0.14	0.20	0.97	0.18
Uniform Delay, d1	51.3	47.5	37.0	2.9	14.4	1.6
Progression Factor	1.00	1.00	1.00	1.00	1.48	1.11
Incremental Delay, d2	6.9	0.0	0.3	0.3	7.7	0.0
Delay (s)	58.1	47.5	37.3	3.2	29.0	1.8
Level of Service	E	D	D	A	C	A
Approach Delay (s)	56.6			4.4	24.5	
Approach LOS	E			A	C	

Intersection Summary			
HCM 2000 Control Delay	23.9	HCM 2000 Level of Service	C
HCM 2000 Volume to Capacity ratio	0.96		
Actuated Cycle Length (s)	120.0	Sum of lost time (s)	20.0
Intersection Capacity Utilization	80.3%	ICU Level of Service	D
Analysis Period (min)	15		
c Critical Lane Group			

Intersection	
Int Delay, s/veh	8.7

Movement	EBL	EBT	EBR	WBL	WBT	WBR	NBL	NBT	NBR	SBL	SBT	SBR
Lane Configurations												
Traffic Vol, veh/h	0	0	0	180	0	15	20	250	0	0	500	675
Future Vol, veh/h	0	0	0	180	0	15	20	250	0	0	500	675
Conflicting Peds, #/hr	0	0	0	0	0	0	0	0	0	0	0	0
Sign Control	Stop	Stop	Stop	Stop	Stop	Stop	Free	Free	Free	Free	Free	Free
RT Channelized	-	-	None	-	-	None	-	-	None	-	-	None
Storage Length	-	-	-	-	-	500	175	-	-	-	-	375
Veh in Median Storage, #	-	1	-	-	0	-	-	0	-	-	0	-
Grade, %	-	0	-	-	0	-	-	0	-	-	0	-
Peak Hour Factor	98	98	98	98	98	98	98	98	98	98	98	98
Heavy Vehicles, %	0	0	0	1	1	1	1	1	1	1	1	1
Mvmt Flow	0	0	0	184	0	15	20	255	0	0	510	689

Major/Minor	Minor1			Major1			Major2		
Conflicting Flow All	1150	1494	255	1199	0	-	-	-	0
Stage 1	295	295	-	-	-	-	-	-	-
Stage 2	855	1199	-	-	-	-	-	-	-
Critical Hdwy	6.41	6.51	6.21	4.11	-	-	-	-	-
Critical Hdwy Stg 1	5.41	5.51	-	-	-	-	-	-	-
Critical Hdwy Stg 2	5.41	5.51	-	-	-	-	-	-	-
Follow-up Hdwy	3.509	4.009	3.309	2.209	-	-	-	-	-
Pot Cap-1 Maneuver	220	124	786	586	-	0	0	-	-
Stage 1	758	671	-	-	-	0	0	-	-
Stage 2	418	260	-	-	-	0	0	-	-
Platoon blocked, %					-			-	-
Mov Cap-1 Maneuver	213	0	786	586	-	-	-	-	-
Mov Cap-2 Maneuver	213	0	-	-	-	-	-	-	-
Stage 1	732	0	-	-	-	-	-	-	-
Stage 2	418	0	-	-	-	-	-	-	-

Approach	WB	NB	SB
HCM Control Delay, s	72.4	0.8	0
HCM LOS	F		

Minor Lane/Major Mvmt	NBL	NBT	WBLn1	WBLn2	SBT	SBR
Capacity (veh/h)	586	-	213	786	-	-
HCM Lane V/C Ratio	0.035	-	0.862	0.019	-	-
HCM Control Delay (s)	11.4	-	77.6	9.7	-	-
HCM Lane LOS	B	-	F	A	-	-
HCM 95th %tile Q(veh)	0.1	-	6.7	0.1	-	-

Movement	EBL	EBR	NBL	NBT	SBT	SBR
Lane Configurations						
Traffic Volume (veh/h)	150	20	30	120	685	15
Future Volume (veh/h)	150	20	30	120	685	15
Initial Q (Qb), veh	0	0	0	0	0	0
Ped-Bike Adj(A_pbT)	1.00	1.00	1.00			1.00
Parking Bus, Adj	1.00	1.00	1.00	1.00	1.00	1.00
Work Zone On Approach	No			No	No	
Adj Sat Flow, veh/h/ln	1885	1885	1885	1885	1900	1900
Adj Flow Rate, veh/h	156	21	31	125	714	16
Peak Hour Factor	0.96	0.96	0.96	0.96	0.96	0.96
Percent Heavy Veh, %	1	1	1	1	0	0
Cap, veh/h	253	225	185	674	1059	24
Arrive On Green	0.14	0.14	0.57	0.57	0.57	0.57
Sat Flow, veh/h	1795	1598	151	1178	1851	41
Grp Volume(v), veh/h	156	21	156	0	0	730
Grp Sat Flow(s),veh/h/ln	1795	1598	1329	0	0	1893
Q Serve(g_s), s	3.6	0.5	0.5	0.0	0.0	11.8
Cycle Q Clear(g_c), s	3.6	0.5	12.3	0.0	0.0	11.8
Prop In Lane	1.00	1.00	0.20			0.02
Lane Grp Cap(c), veh/h	253	225	858	0	0	1083
V/C Ratio(X)	0.62	0.09	0.18	0.00	0.00	0.67
Avail Cap(c_a), veh/h	1378	1226	858	0	0	1883
HCM Platoon Ratio	1.00	1.00	1.00	1.00	1.00	1.00
Upstream Filter(I)	1.00	1.00	1.00	0.00	0.00	1.00
Uniform Delay (d), s/veh	17.7	16.4	4.6	0.0	0.0	6.5
Incr Delay (d2), s/veh	2.4	0.2	0.2	0.0	0.0	1.6
Initial Q Delay(d3),s/veh	0.0	0.0	0.0	0.0	0.0	0.0
%ile BackOfQ(50%),veh/ln	1.5	0.2	0.4	0.0	0.0	3.2
Unsig. Movement Delay, s/veh						
LnGrp Delay(d),s/veh	20.2	16.6	4.8	0.0	0.0	8.1
LnGrp LOS	C	B	A	A	A	A
Approach Vol, veh/h	177			156	730	
Approach Delay, s/veh	19.7			4.8	8.1	
Approach LOS	B			A	A	

Timer - Assigned Phs		2		4		6
Phs Duration (G+Y+Rc), s		31.4		12.5		31.4
Change Period (Y+Rc), s		6.3		6.3		6.3
Max Green Setting (Gmax), s		23.7		33.7		43.7
Max Q Clear Time (g_c+I1), s		14.3		5.6		13.8
Green Ext Time (p_c), s		1.0		0.5		11.3

Intersection Summary	
HCM 6th Ctrl Delay	9.6
HCM 6th LOS	A

Movement	EBL	EBT	EBR	WBL	WBT	WBR	NBL	NBT	NBR	SBL	SBT	SBR
Lane Configurations												
Traffic Volume (veh/h)	85	5	20	10	5	5	35	507	5	5	1266	295
Future Volume (veh/h)	85	5	20	10	5	5	35	507	5	5	1266	295
Initial Q (Qb), veh	0	0	0	0	0	0	0	0	0	0	0	0
Ped-Bike Adj(A_pbT)	1.00		1.00	1.00		1.00	1.00		1.00	1.00		1.00
Parking Bus, Adj	1.00	1.00	1.00	1.00	1.00	1.00	1.00	1.00	1.00	1.00	1.00	1.00
Work Zone On Approach		No			No			No			No	
Adj Sat Flow, veh/h/ln	1885	1885	1885	1900	1900	1900	1826	1826	1826	1856	1856	1856
Adj Flow Rate, veh/h	90	5	21	11	5	5	37	539	5	5	1347	314
Peak Hour Factor	0.94	0.94	0.94	0.94	0.94	0.94	0.94	0.94	0.94	0.94	0.94	0.94
Percent Heavy Veh, %	1	1	1	0	0	0	5	5	5	3	3	3
Cap, veh/h	144	6	23	213	116	116	78	1314	12	580	1327	1125
Arrive On Green	0.09	0.09	0.09	0.01	0.13	0.13	0.02	0.73	0.73	0.00	0.72	0.72
Sat Flow, veh/h	1134	63	265	1810	872	872	1739	1806	17	1767	1856	1572
Grp Volume(v), veh/h	116	0	0	11	0	10	37	0	544	5	1347	314
Grp Sat Flow(s),veh/h/ln	1462	0	0	1810	0	1743	1739	0	1823	1767	1856	1572
Q Serve(g_s), s	11.3	0.0	0.0	0.8	0.0	0.7	0.8	0.0	16.7	0.1	102.9	10.2
Cycle Q Clear(g_c), s	11.3	0.0	0.0	0.8	0.0	0.7	0.8	0.0	16.7	0.1	102.9	10.2
Prop In Lane	0.78		0.18	1.00		0.50	1.00		0.01	1.00		1.00
Lane Grp Cap(c), veh/h	172	0	0	213	0	232	78	0	1326	580	1327	1125
V/C Ratio(X)	0.67	0.00	0.00	0.05	0.00	0.04	0.47	0.00	0.41	0.01	1.02	0.28
Avail Cap(c_a), veh/h	172	0	0	269	0	298	98	0	1326	622	1327	1125
HCM Platoon Ratio	1.00	1.00	1.00	1.00	1.00	1.00	1.00	1.00	1.00	1.00	1.00	1.00
Upstream Filter(I)	1.00	0.00	0.00	1.00	0.00	1.00	1.00	0.00	1.00	1.00	1.00	1.00
Uniform Delay (d), s/veh	65.1	0.0	0.0	57.5	0.0	54.4	42.1	0.0	7.6	6.5	20.5	7.3
Incr Delay (d2), s/veh	10.9	0.0	0.0	0.1	0.0	0.1	4.4	0.0	0.4	0.0	28.5	0.3
Initial Q Delay(d3),s/veh	0.0	0.0	0.0	0.0	0.0	0.0	0.0	0.0	0.0	0.0	0.0	0.0
%ile BackOfQ(50%),veh/ln	4.8	0.0	0.0	0.4	0.0	0.3	1.0	0.0	6.4	0.0	50.1	3.4
Unsig. Movement Delay, s/veh												
LnGrp Delay(d),s/veh	76.0	0.0	0.0	57.6	0.0	54.5	46.5	0.0	8.1	6.5	49.0	7.6
LnGrp LOS	E	A	A	E	A	D	D	A	A	A	F	A
Approach Vol, veh/h		116			21			581			1666	
Approach Delay, s/veh		76.0			56.1			10.5			41.1	
Approach LOS		E			E			B			D	

Timer - Assigned Phs	1	2	3	4	5	6		8
Phs Duration (G+Y+Rc), s	6.0	111.8	6.6	19.5	7.8	110.0		26.1
Change Period (Y+Rc), s	5.5	7.1	5.5	6.9	5.5	7.1		* 6.9
Max Green Setting (Gmax), s	4.0	102.9	5.5	12.6	4.0	102.9		* 25
Max Q Clear Time (g_c+I1), s	2.1	18.7	2.8	13.3	2.8	104.9		2.7
Green Ext Time (p_c), s	0.0	9.1	0.0	0.0	0.0	0.0		0.0

Intersection Summary	
HCM 6th Ctrl Delay	35.4
HCM 6th LOS	D

Notes

* HCM 6th computational engine requires equal clearance times for the phases crossing the barrier.

Movement	EBL	EBT	EBR	WBL	WBT	WBR	NBL	NBT	NBR	SBL	SBT	SBR
Lane Configurations												
Traffic Volume (veh/h)	450	1171	110	5	437	145	85	70	30	550	85	690
Future Volume (veh/h)	450	1171	110	5	437	145	85	70	30	550	85	690
Initial Q (Qb), veh	0	0	0	0	0	0	0	0	0	0	0	0
Ped-Bike Adj(A_pbT)	1.00		1.00	1.00		1.00	1.00		0.99	1.00		0.99
Parking Bus, Adj	1.00	1.00	1.00	1.00	1.00	1.00	1.00	1.00	1.00	1.00	1.00	1.00
Work Zone On Approach		No			No			No			No	
Adj Sat Flow, veh/h/ln	1870	1870	1870	1856	1856	1856	1900	1900	1900	1870	1870	1870
Adj Flow Rate, veh/h	469	1220	115	5	455	151	89	73	31	573	89	719
Peak Hour Factor	0.96	0.96	0.96	0.96	0.96	0.96	0.96	0.96	0.96	0.96	0.96	0.96
Percent Heavy Veh, %	2	2	2	3	3	3	0	0	0	2	2	2
Cap, veh/h	469	1447	645	11	529	235	109	254	108	479	768	1063
Arrive On Green	0.26	0.41	0.41	0.01	0.15	0.15	0.06	0.20	0.20	0.27	0.41	0.41
Sat Flow, veh/h	1781	3554	1583	1767	3526	1567	1810	1259	535	1781	1870	1573
Grp Volume(v), veh/h	469	1220	115	5	455	151	89	0	104	573	89	719
Grp Sat Flow(s),veh/h/ln	1781	1777	1583	1767	1763	1567	1810	0	1794	1781	1870	1573
Q Serve(g_s), s	47.0	55.3	8.3	0.5	22.5	16.2	8.7	0.0	8.8	48.0	5.3	49.0
Cycle Q Clear(g_c), s	47.0	55.3	8.3	0.5	22.5	16.2	8.7	0.0	8.8	48.0	5.3	49.0
Prop In Lane	1.00		1.00	1.00		1.00	1.00		0.30	1.00		1.00
Lane Grp Cap(c), veh/h	469	1447	645	11	529	235	109	0	362	479	768	1063
V/C Ratio(X)	1.00	0.84	0.18	0.46	0.86	0.64	0.82	0.00	0.29	1.20	0.12	0.68
Avail Cap(c_a), veh/h	469	1447	645	50	573	255	284	0	362	479	768	1063
HCM Platoon Ratio	1.00	1.00	1.00	1.00	1.00	1.00	1.00	1.00	1.00	1.00	1.00	1.00
Upstream Filter(I)	1.00	1.00	1.00	1.00	1.00	1.00	1.00	0.00	1.00	1.00	1.00	1.00
Uniform Delay (d), s/veh	65.7	47.7	33.8	88.4	74.0	71.3	82.9	0.0	60.4	65.2	32.6	17.5
Incr Delay (d2), s/veh	41.5	5.2	0.3	27.4	13.4	7.4	13.8	0.0	2.0	107.2	0.3	3.5
Initial Q Delay(d3),s/veh	0.0	0.0	0.0	0.0	0.0	0.0	0.0	0.0	0.0	0.0	0.0	0.0
%ile BackOfQ(50%),veh/ln	26.8	25.6	3.3	0.3	11.2	7.0	4.5	0.0	4.3	36.1	2.5	18.6
Unsig. Movement Delay, s/veh												
LnGrp Delay(d),s/veh	107.3	52.9	34.1	115.8	87.4	78.7	96.8	0.0	62.4	172.4	32.9	20.9
LnGrp LOS	F	D	C	F	F	E	F	A	E	F	C	C
Approach Vol, veh/h		1804			611			193			1381	
Approach Delay, s/veh		65.8			85.5			78.2			84.6	
Approach LOS		E			F			E			F	

Timer - Assigned Phs	1	2	3	4	5	6	7	8
Phs Duration (G+Y+Rc), s	6.1	78.4	15.7	78.3	52.0	32.5	53.0	41.0
Change Period (Y+Rc), s	5.0	5.7	5.0	5.0	5.0	* 5.7	5.0	5.0
Max Green Setting (Gmax), s	5.0	70.3	28.0	56.0	47.0	* 29	48.0	36.0
Max Q Clear Time (g_c+I1), s	2.5	57.3	10.7	51.0	49.0	24.5	50.0	10.8
Green Ext Time (p_c), s	0.0	10.2	0.2	1.7	0.0	2.2	0.0	0.5

Intersection Summary	
HCM 6th Ctrl Delay	75.9
HCM 6th LOS	E

Notes

User approved pedestrian interval to be less than phase max green.

* HCM 6th computational engine requires equal clearance times for the phases crossing the barrier.

Movement	EBT	EBR	WBL	WBT	NBL	NBR
Lane Configurations						
Traffic Volume (veh/h)	1351	1190	525	682	385	380
Future Volume (veh/h)	1351	1190	525	682	385	380
Initial Q (Qb), veh	0	0	0	0	0	0
Ped-Bike Adj(A_pbT)		1.00	1.00		1.00	1.00
Parking Bus, Adj	1.00	1.00	1.00	1.00	1.00	1.00
Work Zone On Approach	No			No	No	
Adj Sat Flow, veh/h/ln	1885	1885	1870	1870	1885	1885
Adj Flow Rate, veh/h	1393	0	541	703	397	392
Peak Hour Factor	0.97	0.97	0.97	0.97	0.97	0.97
Percent Heavy Veh, %	1	1	2	2	1	1
Cap, veh/h	2251		518	2739	527	706
Arrive On Green	0.44	0.00	0.29	0.77	0.15	0.15
Sat Flow, veh/h	5316	1598	1781	3647	3483	1598
Grp Volume(v), veh/h	1393	0	541	703	397	392
Grp Sat Flow(s),veh/h/ln	1716	1598	1781	1777	1742	1598
Q Serve(g_s), s	31.3	0.0	43.6	8.5	16.4	22.7
Cycle Q Clear(g_c), s	31.3	0.0	43.6	8.5	16.4	22.7
Prop In Lane		1.00	1.00		1.00	1.00
Lane Grp Cap(c), veh/h	2251		518	2739	527	706
V/C Ratio(X)	0.62		1.04	0.26	0.75	0.56
Avail Cap(c_a), veh/h	2251		518	2739	527	706
HCM Platoon Ratio	1.00	1.00	1.00	1.00	1.00	1.00
Upstream Filter(I)	1.00	0.00	0.84	0.84	1.00	1.00
Uniform Delay (d), s/veh	32.6	0.0	53.2	4.9	61.0	30.9
Incr Delay (d2), s/veh	1.3	0.0	48.5	0.2	6.5	1.2
Initial Q Delay(d3),s/veh	0.0	0.0	0.0	0.0	0.0	0.0
%ile BackOfQ(50%),veh/ln	13.3	0.0	26.4	3.0	7.7	10.8
Unsig. Movement Delay, s/veh						
LnGrp Delay(d),s/veh	33.8	0.0	101.7	5.1	67.4	32.2
LnGrp LOS	C		F	A	E	C
Approach Vol, veh/h	1393	A		1244	789	
Approach Delay, s/veh	33.8			47.1	49.9	
Approach LOS	C			D	D	

Timer - Assigned Phs	1	2				6	8
Phs Duration (G+Y+Rc), s	50.0	72.0				122.0	28.0
Change Period (Y+Rc), s	6.4	6.4				6.4	5.3
Max Green Setting (Gmax), s	43.6	65.6				115.6	22.7
Max Q Clear Time (g_c+I1), s	45.6	33.3				10.5	24.7
Green Ext Time (p_c), s	0.0	21.5				12.5	0.0

Intersection Summary	
HCM 6th Ctrl Delay	42.4
HCM 6th LOS	D

Notes

User approved pedestrian interval to be less than phase max green.

Unsignalized Delay for [EBR] is excluded from calculations of the approach delay and intersection delay.

Movement	EBL	EBT	EBR	WBL	WBT	WBR	NBL	NBT	NBR	SBL	SBT	SBR
Lane Configurations												
Traffic Volume (vph)	85	1570	0	0	962	335	0	0	710	0	0	670
Future Volume (vph)	85	1570	0	0	962	335	0	0	710	0	0	670
Ideal Flow (vphpl)	1900	1900	1900	1900	1900	1900	1900	1900	1900	1900	1900	1900
Total Lost time (s)	5.0	5.0			5.0	5.0			4.0			5.0
Lane Util. Factor	1.00	0.95			0.95	1.00			1.00			1.00
Frt	1.00	1.00			1.00	0.85			0.86			0.86
Flt Protected	0.95	1.00			1.00	1.00			1.00			1.00
Satd. Flow (prot)	1770	3539			3539	1583			1627			1611
Flt Permitted	0.95	1.00			1.00	1.00			1.00			1.00
Satd. Flow (perm)	1770	3539			3539	1583			1627			1611
Peak-hour factor, PHF	0.97	0.97	0.97	0.97	0.97	0.97	0.97	0.97	0.97	0.97	0.97	0.97
Adj. Flow (vph)	88	1619	0	0	992	345	0	0	732	0	0	691
RTOR Reduction (vph)	0	0	0	0	0	147	0	0	0	0	0	35
Lane Group Flow (vph)	88	1619	0	0	992	198	0	0	732	0	0	656
Heavy Vehicles (%)	2%	2%	2%	2%	2%	2%	1%	1%	1%	2%	2%	2%
Turn Type	Prot	NA			NA	custom			Free			Prot
Protected Phases	3	6 8			6	1						8
Permitted Phases						6			Free			8
Actuated Green, G (s)	61.8	140.0			68.2	68.2			140.0			61.8
Effective Green, g (s)	61.8	140.0			68.2	68.2			140.0			61.8
Actuated g/C Ratio	0.44	1.00			0.49	0.49			1.00			0.44
Clearance Time (s)	5.0				5.0	5.0						5.0
Vehicle Extension (s)	2.0				2.0	2.0						2.0
Lane Grp Cap (vph)	781	3539			1723	771			1627			711
v/s Ratio Prot	0.05	0.46			c0.28	0.13						c0.41
v/s Ratio Perm									0.45			
v/c Ratio	0.11	0.46			0.58	0.26			0.45			0.92
Uniform Delay, d1	23.0	0.0			25.6	21.0			0.0			36.8
Progression Factor	0.68	1.00			1.00	1.00			1.00			1.00
Incremental Delay, d2	0.0	0.0			1.4	0.8			0.9			17.2
Delay (s)	15.5	0.0			27.0	21.9			0.9			54.1
Level of Service	B	A			C	C			A			D
Approach Delay (s)		0.8			25.7			0.9			54.1	
Approach LOS		A			C			A			D	

Intersection Summary			
HCM 2000 Control Delay	16.5	HCM 2000 Level of Service	B
HCM 2000 Volume to Capacity ratio	0.76		
Actuated Cycle Length (s)	140.0	Sum of lost time (s)	13.0
Intersection Capacity Utilization	76.4%	ICU Level of Service	D
Analysis Period (min)	15		
c Critical Lane Group			

Movement	EBL	EBT	EBR	WBL	WBT	WBR	NBL	NBT	NBR	SBL	SBT	SBR
Lane Configurations												
Traffic Volume (vph)	675	510	75	367	260	995	0	0	0	1130	1030	560
Future Volume (vph)	675	510	75	367	260	995	0	0	0	1130	1030	560
Ideal Flow (vphpl)	1900	1900	1900	1900	1900	1900	1900	1900	1900	1900	1900	1900
Total Lost time (s)	5.0	5.0		9.0	9.0	4.0				5.0	5.0	5.0
Lane Util. Factor	0.97	0.95		1.00	0.95	1.00				0.97	0.95	0.95
Frt	1.00	0.98		1.00	1.00	0.85				1.00	1.00	0.85
Flt Protected	0.95	1.00		0.95	1.00	1.00				0.95	1.00	1.00
Satd. Flow (prot)	3467	3505		1770	3539	1583				3433	1770	1504
Flt Permitted	0.95	1.00		0.95	1.00	1.00				0.95	1.00	1.00
Satd. Flow (perm)	3467	3505		1770	3539	1583				3433	1770	1504
Peak-hour factor, PHF	0.98	0.98	0.98	0.98	0.98	0.98	0.98	0.98	0.98	0.98	0.98	0.98
Adj. Flow (vph)	689	520	77	374	265	1015	0	0	0	1153	1051	571
RTOR Reduction (vph)	0	8	0	0	0	4	0	0	0	0	0	0
Lane Group Flow (vph)	689	589	0	374	265	1011	0	0	0	1153	1051	571
Heavy Vehicles (%)	1%	1%	1%	2%	2%	2%	0%	0%	0%	2%	2%	2%
Turn Type	Split	NA		Split	NA	custom				Split	NA	custom
Protected Phases	2	2		3	3	7				4	4	4 5
Permitted Phases						7						
Actuated Green, G (s)	24.0	24.0		25.0	25.0	107.0				72.0	72.0	101.0
Effective Green, g (s)	24.0	24.0		25.0	25.0	107.0				72.0	72.0	101.0
Actuated g/C Ratio	0.17	0.17		0.18	0.18	0.76				0.51	0.51	0.72
Clearance Time (s)	5.0	5.0		9.0	9.0	4.0				5.0	5.0	
Vehicle Extension (s)	4.0	4.0		3.0	3.0	3.0				3.0	3.0	
Lane Grp Cap (vph)	594	600		316	631	1209				1765	910	1085
v/s Ratio Prot	c0.20	0.17		c0.21	0.07	0.64				0.34	c0.59	0.38
v/s Ratio Perm												
v/c Ratio	1.16	0.98		1.18	0.42	0.84				0.65	1.15	0.53
Uniform Delay, d1	58.0	57.8		57.5	51.1	10.8				24.9	34.0	8.8
Progression Factor	1.00	1.00		1.13	1.18	1.16				1.00	1.00	1.00
Incremental Delay, d2	89.6	31.9		103.2	0.3	5.0				1.9	82.2	0.6
Delay (s)	147.6	89.7		168.2	60.3	17.5				26.8	116.2	9.4
Level of Service	F	F		F	E	B				C	F	A
Approach Delay (s)		120.7			58.4			0.0			57.1	
Approach LOS		F			E			A			E	

Intersection Summary			
HCM 2000 Control Delay	71.8	HCM 2000 Level of Service	E
HCM 2000 Volume to Capacity ratio	1.16		
Actuated Cycle Length (s)	140.0	Sum of lost time (s)	19.0
Intersection Capacity Utilization	118.2%	ICU Level of Service	H
Analysis Period (min)	15		
c Critical Lane Group			

Movement	EBL	EBT	EBR	WBL	WBT	WBR	NBL	NBT	NBR	SBL	SBT	SBR
Lane Configurations												
Traffic Volume (veh/h)	305	630	455	960	215	180	60	545	1070	205	1280	130
Future Volume (veh/h)	305	630	455	960	215	180	60	545	1070	205	1280	130
Initial Q (Qb), veh	0	0	0	0	0	0	0	0	0	0	0	0
Ped-Bike Adj(A_pbT)	1.00		1.00	1.00		1.00	1.00		1.00	1.00		1.00
Parking Bus, Adj	1.00	1.00	1.00	1.00	1.00	1.00	1.00	1.00	1.00	1.00	1.00	1.00
Work Zone On Approach		No			No			No			No	
Adj Sat Flow, veh/h/ln	1885	1885	1885	1870	1870	1870	1885	1885	1885	1885	1885	1885
Adj Flow Rate, veh/h	311	643	0	890	345	0	61	556	0	209	1306	0
Peak Hour Factor	0.98	0.98	0.98	0.98	0.98	0.98	0.98	0.98	0.98	0.98	0.98	0.98
Percent Heavy Veh, %	1	1	1	2	2	2	1	1	1	1	1	1
Cap, veh/h	314	660		1115	586		79	1029		261	1593	
Arrive On Green	0.17	0.17	0.00	0.10	0.10	0.00	0.04	0.20	0.00	0.15	0.31	0.00
Sat Flow, veh/h	1795	3770	1598	3563	1870	1585	1795	5147	1598	1795	5147	1598
Grp Volume(v), veh/h	311	643	0	890	345	0	61	556	0	209	1306	0
Grp Sat Flow(s),veh/h/ln	1795	1885	1598	1781	1870	1585	1795	1716	1598	1795	1716	1598
Q Serve(g_s), s	20.7	20.4	0.0	29.3	21.1	0.0	4.0	11.6	0.0	13.5	28.2	0.0
Cycle Q Clear(g_c), s	20.7	20.4	0.0	29.3	21.1	0.0	4.0	11.6	0.0	13.5	28.2	0.0
Prop In Lane	1.00		1.00	1.00		1.00	1.00		1.00	1.00		1.00
Lane Grp Cap(c), veh/h	314	660		1115	586		79	1029		261	1593	
V/C Ratio(X)	0.99	0.97		0.80	0.59		0.77	0.54		0.80	0.82	
Avail Cap(c_a), veh/h	314	660		1128	592		135	1029		269	1593	
HCM Platoon Ratio	1.00	1.00	1.00	0.33	0.33	0.33	1.00	1.00	1.00	1.00	1.00	1.00
Upstream Filter(I)	1.00	1.00	0.00	0.80	0.80	0.00	0.17	0.17	0.00	1.00	1.00	0.00
Uniform Delay (d), s/veh	49.4	49.2	0.0	50.1	46.4	0.0	56.8	43.1	0.0	49.6	38.3	0.0
Incr Delay (d2), s/veh	48.3	29.3	0.0	4.4	2.9	0.0	3.9	0.3	0.0	16.3	4.9	0.0
Initial Q Delay(d3),s/veh	0.0	0.0	0.0	0.0	0.0	0.0	0.0	0.0	0.0	0.0	0.0	0.0
%ile BackOfQ(50%),veh/ln	13.4	12.1	0.0	14.7	11.1	0.0	1.9	5.0	0.0	7.2	12.5	0.0
Unsig. Movement Delay, s/veh												
LnGrp Delay(d),s/veh	97.7	78.6	0.0	54.5	49.3	0.0	60.6	43.4	0.0	65.9	43.2	0.0
LnGrp LOS	F	E		D	D		E	D		E	D	
Approach Vol, veh/h		954	A		1235	A		617	A		1515	A
Approach Delay, s/veh		84.8			53.1			45.1			46.3	
Approach LOS		F			D			D			D	

Timer - Assigned Phs		2	3	4		6	7	8				
Phs Duration (G+Y+Rc), s		42.6	9.3	42.1		26.0	22.4	29.0				
Change Period (Y+Rc), s		5.0	4.0	5.0		5.0	5.0	* 5				
Max Green Setting (Gmax), s		38.0	9.0	33.0		21.0	18.0	* 24				
Max Q Clear Time (g_c+I1), s		31.3	6.0	30.2		22.7	15.5	13.6				
Green Ext Time (p_c), s		6.3	0.0	2.6		0.0	0.2	4.4				

Intersection Summary	
HCM 6th Ctrl Delay	56.6
HCM 6th LOS	E

Notes

User approved volume balancing among the lanes for turning movement.
* HCM 6th computational engine requires equal clearance times for the phases crossing the barrier.
User approved changes to right turn type.

Movement	EBL	EBT	EBR	WBL	WBT	WBR	NBL	NBT	NBR	SBL	SBT	SBR
Lane Configurations												
Traffic Volume (veh/h)	130	1745	25	5	1235	5	20	5	5	10	5	105
Future Volume (veh/h)	130	1745	25	5	1235	5	20	5	5	10	5	105
Initial Q (Qb), veh	0	0	0	0	0	0	0	0	0	0	0	0
Ped-Bike Adj(A_pbT)	1.00		1.00	1.00		1.00	1.00		1.00	1.00		1.00
Parking Bus, Adj	1.00	1.00	1.00	1.00	1.00	1.00	1.00	1.00	1.00	1.00	1.00	1.00
Work Zone On Approach		No			No			No			No	
Adj Sat Flow, veh/h/ln	1885	1885	1885	1870	1870	1870	1900	1900	1900	1870	1870	1870
Adj Flow Rate, veh/h	137	1837	26	5	1300	5	21	5	5	11	5	111
Peak Hour Factor	0.95	0.95	0.95	0.95	0.95	0.95	0.95	0.95	0.95	0.95	0.95	0.95
Percent Heavy Veh, %	1	1	1	2	2	2	0	0	0	2	2	2
Cap, veh/h	166	2843	40	11	2542	10	167	72	72	137	54	143
Arrive On Green	0.12	1.00	1.00	0.01	0.70	0.70	0.09	0.09	0.09	0.09	0.09	0.09
Sat Flow, veh/h	1795	3616	51	1781	3631	14	1180	792	792	958	591	1580
Grp Volume(v), veh/h	137	908	955	5	636	669	21	0	10	16	0	111
Grp Sat Flow(s),veh/h/ln	1795	1791	1876	1781	1777	1868	1180	0	1583	1549	0	1580
Q Serve(g_s), s	8.9	0.0	0.0	0.3	20.1	20.1	1.8	0.0	0.7	0.0	0.0	8.2
Cycle Q Clear(g_c), s	8.9	0.0	0.0	0.3	20.1	20.1	2.8	0.0	0.7	0.9	0.0	8.2
Prop In Lane	1.00		0.03	1.00		0.01	1.00		0.50	0.69		1.00
Lane Grp Cap(c), veh/h	166	1408	1475	11	1244	1308	167	0	144	191	0	143
V/C Ratio(X)	0.82	0.64	0.65	0.44	0.51	0.51	0.13	0.00	0.07	0.08	0.00	0.77
Avail Cap(c_a), veh/h	314	1408	1475	134	1244	1308	265	0	264	307	0	263
HCM Platoon Ratio	1.33	1.33	1.33	1.00	1.00	1.00	1.00	1.00	1.00	1.00	1.00	1.00
Upstream Filter(I)	0.09	0.09	0.09	1.00	1.00	1.00	1.00	0.00	1.00	1.00	0.00	1.00
Uniform Delay (d), s/veh	51.7	0.0	0.0	59.4	8.4	8.4	51.3	0.0	49.9	50.0	0.0	53.4
Incr Delay (d2), s/veh	1.0	0.2	0.2	24.3	1.5	1.4	0.5	0.0	0.3	0.3	0.0	11.9
Initial Q Delay(d3),s/veh	0.0	0.0	0.0	0.0	0.0	0.0	0.0	0.0	0.0	0.0	0.0	0.0
%ile BackOfQ(50%),veh/ln	3.9	0.1	0.1	0.2	7.3	7.7	0.6	0.0	0.3	0.5	0.0	3.8
Unsig. Movement Delay, s/veh												
LnGrp Delay(d),s/veh	52.6	0.2	0.2	83.7	9.9	9.8	51.8	0.0	50.2	50.3	0.0	65.3
LnGrp LOS	D	A	A	F	A	A	D	A	D	D	A	E
Approach Vol, veh/h		2000			1310			31			127	
Approach Delay, s/veh		3.8			10.2			51.3			63.4	
Approach LOS		A			B			D			E	

Timer - Assigned Phs	1	2		4	5	6		8
Phs Duration (G+Y+Rc), s	15.1	89.0		15.9	4.8	99.3		15.9
Change Period (Y+Rc), s	4.0	5.0		5.0	4.0	5.0		5.0
Max Green Setting (Gmax), s	21.0	65.0		20.0	9.0	77.0		20.0
Max Q Clear Time (g_c+I1), s	10.9	22.1		10.2	2.3	2.0		4.8
Green Ext Time (p_c), s	0.3	39.6		0.4	0.0	61.7		0.1

Intersection Summary	
HCM 6th Ctrl Delay	8.8
HCM 6th LOS	A

Movement	EBL	EBT	EBR	WBL	WBT	WBR	NBL	NBT	NBR	SBL	SBT	SBR
Lane Configurations												
Traffic Volume (veh/h)	20	1555	190	70	1120	15	105	15	45	10	20	20
Future Volume (veh/h)	20	1555	190	70	1120	15	105	15	45	10	20	20
Initial Q (Qb), veh	0	0	0	0	0	0	0	0	0	0	0	0
Ped-Bike Adj(A_pbT)	1.00		1.00	1.00		1.00	1.00		0.98	1.00		0.96
Parking Bus, Adj	1.00	1.00	1.00	1.00	1.00	1.00	1.00	1.00	1.00	1.00	1.00	1.00
Work Zone On Approach		No			No			No			No	
Adj Sat Flow, veh/h/ln	1885	1885	1885	1870	1870	1870	1900	1900	1900	1870	1870	1870
Adj Flow Rate, veh/h	21	1637	200	74	1179	16	111	16	47	11	21	21
Peak Hour Factor	0.95	0.95	0.95	0.95	0.95	0.95	0.95	0.95	0.95	0.95	0.95	0.95
Percent Heavy Veh, %	1	1	1	2	2	2	0	0	0	2	2	2
Cap, veh/h	515	2146	258	96	1526	21	156	36	106	63	30	30
Arrive On Green	0.29	0.67	0.67	0.02	0.14	0.14	0.09	0.09	0.09	0.04	0.04	0.04
Sat Flow, veh/h	1795	3219	387	1781	3590	49	1810	420	1233	1781	841	841
Grp Volume(v), veh/h	21	899	938	74	584	611	111	0	63	11	0	42
Grp Sat Flow(s),veh/h/ln	1795	1791	1815	1781	1777	1861	1810	0	1652	1781	0	1682
Q Serve(g_s), s	1.0	40.3	42.8	5.0	38.0	38.0	7.2	0.0	4.3	0.7	0.0	3.0
Cycle Q Clear(g_c), s	1.0	40.3	42.8	5.0	38.0	38.0	7.2	0.0	4.3	0.7	0.0	3.0
Prop In Lane	1.00		0.21	1.00		0.03	1.00		0.75	1.00		0.50
Lane Grp Cap(c), veh/h	515	1194	1210	96	755	791	156	0	142	63	0	59
V/C Ratio(X)	0.04	0.75	0.78	0.77	0.77	0.77	0.71	0.00	0.44	0.18	0.00	0.71
Avail Cap(c_a), veh/h	515	1194	1210	208	755	791	271	0	248	267	0	252
HCM Platoon Ratio	1.00	1.00	1.00	0.33	0.33	0.33	1.00	1.00	1.00	1.00	1.00	1.00
Upstream Filter(I)	1.00	1.00	1.00	0.83	0.83	0.83	1.00	0.00	1.00	1.00	0.00	1.00
Uniform Delay (d), s/veh	30.9	13.4	13.8	58.2	46.0	46.0	53.4	0.0	52.1	56.2	0.0	57.3
Incr Delay (d2), s/veh	0.0	4.4	4.9	10.5	6.3	6.1	8.3	0.0	3.1	1.9	0.0	19.8
Initial Q Delay(d3),s/veh	0.0	0.0	0.0	0.0	0.0	0.0	0.0	0.0	0.0	0.0	0.0	0.0
%ile BackOfQ(50%),veh/ln	0.4	15.9	17.2	2.6	19.4	20.3	3.6	0.0	1.9	0.4	0.0	1.6
Unsig. Movement Delay, s/veh												
LnGrp Delay(d),s/veh	30.9	17.8	18.7	68.7	52.3	52.1	61.7	0.0	55.2	58.1	0.0	77.1
LnGrp LOS	C	B	B	E	D	D	E	A	E	E	A	E
Approach Vol, veh/h		1858			1269			174			53	
Approach Delay, s/veh		18.4			53.2			59.3			73.1	
Approach LOS		B			D			E			E	

Timer - Assigned Phs	1	2		4	5	6		8
Phs Duration (G+Y+Rc), s	39.4	56.0		15.3	10.4	85.0		9.2
Change Period (Y+Rc), s	5.0	* 5		5.0	4.0	5.0		5.0
Max Green Setting (Gmax), s	14.0	* 51		18.0	14.0	51.0		18.0
Max Q Clear Time (g_c+I1), s	3.0	40.0		9.2	7.0	44.8		5.0
Green Ext Time (p_c), s	0.0	9.8		0.5	0.1	6.1		0.1

Intersection Summary	
HCM 6th Ctrl Delay	34.5
HCM 6th LOS	C

Notes

User approved pedestrian interval to be less than phase max green.

* HCM 6th computational engine requires equal clearance times for the phases crossing the barrier.

Movement	EBL	EBT	EBR	WBL	WBT	WBR	NBL	NBT	NBR	SBL	SBT	SBR
Lane Configurations												
Traffic Volume (veh/h)	10	1575	30	35	1040	85	120	15	40	70	15	30
Future Volume (veh/h)	10	1575	30	35	1040	85	120	15	40	70	15	30
Initial Q (Qb), veh	0	0	0	0	0	0	0	0	0	0	0	0
Ped-Bike Adj(A_pbT)	1.00		1.00	1.00		1.00	1.00		1.00	1.00		1.00
Parking Bus, Adj	1.00	1.00	1.00	1.00	1.00	1.00	1.00	1.00	1.00	1.00	1.00	1.00
Work Zone On Approach		No			No			No			No	
Adj Sat Flow, veh/h/ln	1885	1885	1885	1870	1870	1870	1826	1826	1826	1885	1885	1885
Adj Flow Rate, veh/h	11	1750	33	39	1156	94	133	17	44	78	17	33
Peak Hour Factor	0.90	0.90	0.90	0.90	0.90	0.90	0.90	0.90	0.90	0.90	0.90	0.90
Percent Heavy Veh, %	1	1	1	2	2	2	5	5	5	1	1	1
Cap, veh/h	23	2333	44	54	2217	180	191	26	49	281	56	347
Arrive On Green	0.02	0.86	0.86	0.03	0.67	0.67	0.20	0.20	0.20	0.20	0.20	0.20
Sat Flow, veh/h	1795	3596	68	1781	3328	270	689	129	240	1109	275	1598
Grp Volume(v), veh/h	11	870	913	39	617	633	194	0	0	95	0	33
Grp Sat Flow(s),veh/h/ln	1795	1791	1873	1781	1777	1821	1058	0	0	1384	0	1598
Q Serve(g_s), s	0.7	22.5	22.8	2.6	21.3	21.3	15.4	0.0	0.0	0.0	0.0	2.0
Cycle Q Clear(g_c), s	0.7	22.5	22.8	2.6	21.3	21.3	22.3	0.0	0.0	6.9	0.0	2.0
Prop In Lane	1.00		0.04	1.00		0.15	0.69		0.23	0.82		1.00
Lane Grp Cap(c), veh/h	23	1162	1215	54	1184	1214	267	0	0	337	0	347
V/C Ratio(X)	0.48	0.75	0.75	0.72	0.52	0.52	0.73	0.00	0.00	0.28	0.00	0.10
Avail Cap(c_a), veh/h	135	1162	1215	134	1184	1214	307	0	0	379	0	393
HCM Platoon Ratio	1.33	1.33	1.33	1.00	1.00	1.00	1.00	1.00	1.00	1.00	1.00	1.00
Upstream Filter(I)	0.36	0.36	0.36	1.00	1.00	1.00	1.00	0.00	0.00	1.00	0.00	1.00
Uniform Delay (d), s/veh	58.6	4.4	4.5	57.7	10.2	10.2	49.5	0.0	0.0	40.7	0.0	37.6
Incr Delay (d2), s/veh	5.5	1.6	1.6	16.5	1.6	1.6	7.2	0.0	0.0	0.5	0.0	0.1
Initial Q Delay(d3),s/veh	0.0	0.0	0.0	0.0	0.0	0.0	0.0	0.0	0.0	0.0	0.0	0.0
%ile BackOfQ(50%),veh/ln	0.4	4.1	4.3	1.4	8.1	8.3	6.3	0.0	0.0	2.5	0.0	0.8
Unsig. Movement Delay, s/veh												
LnGrp Delay(d),s/veh	64.1	6.1	6.0	74.2	11.9	11.8	56.7	0.0	0.0	41.1	0.0	37.7
LnGrp LOS	E	A	A	E	B	B	E	A	A	D	A	D
Approach Vol, veh/h		1794			1289			194			128	
Approach Delay, s/veh		6.4			13.7			56.7			40.3	
Approach LOS		A			B			E			D	

Timer - Assigned Phs	1	2		4	5	6		8
Phs Duration (G+Y+Rc), s	5.5	85.0		29.5	7.6	82.9		29.5
Change Period (Y+Rc), s	4.0	5.0		5.0	4.0	5.0		5.0
Max Green Setting (Gmax), s	9.0	69.0		28.0	9.0	69.0		28.0
Max Q Clear Time (g_c+I1), s	2.7	23.3		8.9	4.6	24.8		24.3
Green Ext Time (p_c), s	0.0	36.4		0.3	0.0	43.2		0.2

Intersection Summary	
HCM 6th Ctrl Delay	13.3
HCM 6th LOS	B

Notes

User approved pedestrian interval to be less than phase max green.

Movement	EBL	EBT	EBR	WBL	WBT	WBR	NBL	NBT	NBR	SBL	SBT	SBR
Lane Configurations												
Traffic Volume (veh/h)	40	1681	10	10	1157	40	20	0	15	35	0	30
Future Volume (veh/h)	40	1681	10	10	1157	40	20	0	15	35	0	30
Initial Q (Qb), veh	0	0	0	0	0	0	0	0	0	0	0	0
Ped-Bike Adj(A_pbT)	1.00		1.00	1.00		1.00	1.00		1.00	1.00		1.00
Parking Bus, Adj	1.00	1.00	1.00	1.00	1.00	1.00	1.00	1.00	1.00	1.00	1.00	1.00
Work Zone On Approach		No			No			No			No	
Adj Sat Flow, veh/h/ln	1856	1856	1856	1870	1870	1870	1781	1781	1781	1900	1900	1900
Adj Flow Rate, veh/h	42	1751	10	10	1205	42	21	0	16	36	0	31
Peak Hour Factor	0.96	0.96	0.96	0.96	0.96	0.96	0.96	0.96	0.96	0.96	0.96	0.96
Percent Heavy Veh, %	3	3	3	2	2	2	8	8	8	0	0	0
Cap, veh/h	64	2426	1082	22	2360	1053	82	0	149	82	0	159
Arrive On Green	0.04	0.69	0.69	0.01	0.66	0.66	0.10	0.00	0.10	0.10	0.00	0.10
Sat Flow, veh/h	1767	3526	1572	1781	3554	1585	7	0	1510	8	0	1610
Grp Volume(v), veh/h	42	1751	10	10	1205	42	21	0	16	36	0	31
Grp Sat Flow(s),veh/h/ln	1767	1763	1572	1781	1777	1585	7	0	1510	8	0	1610
Q Serve(g_s), s	2.1	27.3	0.2	0.5	15.3	0.8	0.0	0.0	0.9	0.0	0.0	1.6
Cycle Q Clear(g_c), s	2.1	27.3	0.2	0.5	15.3	0.8	8.7	0.0	0.9	8.7	0.0	1.6
Prop In Lane	1.00		1.00	1.00		1.00	1.00		1.00	1.00		1.00
Lane Grp Cap(c), veh/h	64	2426	1082	22	2360	1053	82	0	149	82	0	159
V/C Ratio(X)	0.65	0.72	0.01	0.46	0.51	0.04	0.26	0.00	0.11	0.44	0.00	0.20
Avail Cap(c_a), veh/h	181	2713	1210	101	2570	1146	412	0	528	230	0	327
HCM Platoon Ratio	1.00	1.00	1.00	1.00	1.00	1.00	1.00	1.00	1.00	1.00	1.00	1.00
Upstream Filter(I)	1.00	1.00	1.00	1.00	1.00	1.00	1.00	0.00	1.00	1.00	0.00	1.00
Uniform Delay (d), s/veh	42.2	8.6	4.3	43.5	7.6	5.1	44.3	0.0	36.4	44.3	0.0	36.7
Incr Delay (d2), s/veh	10.7	1.2	0.0	14.1	0.4	0.0	1.6	0.0	0.3	7.7	0.0	1.3
Initial Q Delay(d3),s/veh	0.0	0.0	0.0	0.0	0.0	0.0	0.0	0.0	0.0	0.0	0.0	0.0
%ile BackOfQ(50%),veh/ln	1.1	8.7	0.1	0.3	5.0	0.2	0.5	0.0	0.3	1.0	0.0	0.7
Unsig. Movement Delay, s/veh												
LnGrp Delay(d),s/veh	52.9	9.7	4.3	57.6	7.9	5.2	45.9	0.0	36.7	52.0	0.0	38.0
LnGrp LOS	D	A	A	E	A	A	D	A	D	D	A	D
Approach Vol, veh/h		1803			1257			37			67	
Approach Delay, s/veh		10.7			8.2			41.9			45.5	
Approach LOS		B			A			D			D	

Timer - Assigned Phs	1	2		4	5	6		8
Phs Duration (G+Y+Rc), s	9.6	65.3		13.8	7.5	67.4		13.8
Change Period (Y+Rc), s	6.4	6.4		5.0	6.4	6.4		5.0
Max Green Setting (Gmax), s	9.1	64.1		18.0	5.0	68.2		31.0
Max Q Clear Time (g_c+I1), s	4.1	17.3		10.7	2.5	29.3		10.7
Green Ext Time (p_c), s	0.0	24.4		0.2	0.0	31.8		0.1

Intersection Summary		
HCM 6th Ctrl Delay		10.8
HCM 6th LOS		B

Intersection	
Int Delay, s/veh	1.5

Movement	EBL	EBT	WBT	WBR	SBL	SBR
Lane Configurations						
Traffic Vol, veh/h	39	375	60	10	10	39
Future Vol, veh/h	39	375	60	10	10	39
Conflicting Peds, #/hr	0	0	0	0	0	0
Sign Control	Free	Free	Free	Free	Stop	Stop
RT Channelized	-	None	-	None	-	None
Storage Length	450	-	-	-	0	-
Veh in Median Storage, #	-	0	0	-	0	-
Grade, %	-	0	0	-	0	-
Peak Hour Factor	89	89	89	89	89	89
Heavy Vehicles, %	2	2	2	2	49	49
Mvmt Flow	44	421	67	11	11	44

Major/Minor	Major1		Major2		Minor2	
Conflicting Flow All	78	0	-	0	582	73
Stage 1	-	-	-	-	73	-
Stage 2	-	-	-	-	509	-
Critical Hdwy	4.12	-	-	-	6.89	6.69
Critical Hdwy Stg 1	-	-	-	-	5.89	-
Critical Hdwy Stg 2	-	-	-	-	5.89	-
Follow-up Hdwy	2.218	-	-	-	3.941	3.741
Pot Cap-1 Maneuver	1520	-	-	-	405	873
Stage 1	-	-	-	-	843	-
Stage 2	-	-	-	-	518	-
Platoon blocked, %		-	-	-		
Mov Cap-1 Maneuver	1520	-	-	-	393	873
Mov Cap-2 Maneuver	-	-	-	-	393	-
Stage 1	-	-	-	-	819	-
Stage 2	-	-	-	-	518	-

Approach	EB	WB	SB
HCM Control Delay, s	0.7	0	10.6
HCM LOS			B

Minor Lane/Major Mvmt	EBL	EBT	WBT	WBR	SBLn1
Capacity (veh/h)	1520	-	-	-	699
HCM Lane V/C Ratio	0.029	-	-	-	0.079
HCM Control Delay (s)	7.4	-	-	-	10.6
HCM Lane LOS	A	-	-	-	B
HCM 95th %tile Q(veh)	0.1	-	-	-	0.3

Intersection	
Int Delay, s/veh	6.1

Movement	EBL	EBT	EBR	WBL	WBT	WBR	NBL	NBT	NBR	SBL	SBT	SBR
Lane Configurations												
Traffic Vol, veh/h	0	219	10	5	99	0	90	5	185	5	0	0
Future Vol, veh/h	0	219	10	5	99	0	90	5	185	5	0	0
Conflicting Peds, #/hr	0	0	0	0	0	0	0	0	0	0	0	0
Sign Control	Free	Free	Free	Free	Free	Free	Stop	Stop	Stop	Stop	Stop	Stop
RT Channelized	-	-	None	-	-	None	-	-	None	-	-	None
Storage Length	-	-	-	-	-	-	-	-	-	-	-	-
Veh in Median Storage, #	-	0	-	-	0	-	-	0	-	-	0	-
Grade, %	-	0	-	-	0	-	-	0	-	-	0	-
Peak Hour Factor	89	89	89	89	89	89	89	89	89	89	89	89
Heavy Vehicles, %	4	4	4	30	30	30	1	1	1	0	0	0
Mvmt Flow	0	246	11	6	111	0	101	6	208	6	0	0

Major/Minor	Major1			Major2			Minor1			Minor2		
Conflicting Flow All	111	0	0	257	0	0	375	375	129	249	380	111
Stage 1	-	-	-	-	-	-	252	252	-	123	123	-
Stage 2	-	-	-	-	-	-	123	123	-	126	257	-
Critical Hdwy	4.16	-	-	4.55	-	-	7.315	6.515	6.915	7.3	6.5	6.2
Critical Hdwy Stg 1	-	-	-	-	-	-	6.515	5.515	-	6.1	5.5	-
Critical Hdwy Stg 2	-	-	-	-	-	-	6.115	5.515	-	6.5	5.5	-
Follow-up Hdwy	2.238	-	-	2.485	-	-	3.5095	4.0095	3.3095	3.5	4	3.3
Pot Cap-1 Maneuver	1464	-	-	1143	-	-	572	557	900	699	556	948
Stage 1	-	-	-	-	-	-	733	700	-	886	798	-
Stage 2	-	-	-	-	-	-	883	796	-	870	699	-
Platoon blocked, %		-	-		-	-						
Mov Cap-1 Maneuver	1464	-	-	1143	-	-	569	554	900	531	553	948
Mov Cap-2 Maneuver	-	-	-	-	-	-	569	554	-	531	553	-
Stage 1	-	-	-	-	-	-	733	700	-	886	793	-
Stage 2	-	-	-	-	-	-	878	791	-	664	699	-

Approach	EB	WB	NB	SB
HCM Control Delay, s	0	0.4	13.2	11.9
HCM LOS			B	B

Minor Lane/Major Mvmt	NBLn1	EBL	EBT	EBR	WBL	WBT	WBR	SBLn1
Capacity (veh/h)	751	1464	-	-	1143	-	-	531
HCM Lane V/C Ratio	0.419	-	-	-	0.005	-	-	0.011
HCM Control Delay (s)	13.2	0	-	-	8.2	0	-	11.9
HCM Lane LOS	B	A	-	-	A	A	-	B
HCM 95th %tile Q(veh)	2.1	0	-	-	0	-	-	0

Movement	WBL	WBR	NBT	NBR	SBL	SBT
Lane Configurations						
Traffic Volume (veh/h)	32	152	950	191	58	320
Future Volume (veh/h)	32	152	950	191	58	320
Initial Q (Qb), veh	0	0	0	0	0	0
Ped-Bike Adj(A_pbT)	1.00	1.00		1.00	1.00	
Parking Bus, Adj	1.00	1.00	1.00	1.00	1.00	1.00
Work Zone On Approach	No		No			No
Adj Sat Flow, veh/h/ln	1618	1618	1856	1856	1826	1826
Adj Flow Rate, veh/h	34	163	1022	205	62	344
Peak Hour Factor	0.93	0.93	0.93	0.93	0.93	0.93
Percent Heavy Veh, %	19	19	3	3	5	5
Cap, veh/h	37	177	1022	205	103	1368
Arrive On Green	0.15	0.15	0.68	0.68	0.03	0.75
Sat Flow, veh/h	240	1152	1500	301	1739	1826
Grp Volume(v), veh/h	198	0	0	1227	62	344
Grp Sat Flow(s),veh/h/ln	1399	0	0	1801	1739	1826
Q Serve(g_s), s	20.7	0.0	0.0	101.2	1.5	8.6
Cycle Q Clear(g_c), s	20.7	0.0	0.0	101.2	1.5	8.6
Prop In Lane	0.17	0.82		0.17	1.00	
Lane Grp Cap(c), veh/h	215	0	0	1228	103	1368
V/C Ratio(X)	0.92	0.00	0.00	1.00	0.60	0.25
Avail Cap(c_a), veh/h	231	0	0	1228	111	1368
HCM Platoon Ratio	1.00	1.00	1.00	1.00	1.00	1.00
Upstream Filter(I)	1.00	0.00	0.00	1.00	1.00	1.00
Uniform Delay (d), s/veh	62.0	0.0	0.0	23.7	41.7	5.7
Incr Delay (d2), s/veh	37.2	0.0	0.0	25.6	9.8	0.1
Initial Q Delay(d3),s/veh	0.0	0.0	0.0	0.0	0.0	0.0
%ile BackOfQ(50%),veh/ln	9.6	0.0	0.0	48.3	1.9	3.2
Unsig. Movement Delay, s/veh						
LnGrp Delay(d),s/veh	99.2	0.0	0.0	49.2	51.5	5.9
LnGrp LOS	F	A	A	D	D	A
Approach Vol, veh/h	198		1227			406
Approach Delay, s/veh	99.2		49.2			12.9
Approach LOS	F		D			B

Timer - Assigned Phs	1	2				6	8
Phs Duration (G+Y+Rc), s	10.1	109.4				119.5	29.1
Change Period (Y+Rc), s	5.5	* 8.1				* 8.1	6.3
Max Green Setting (Gmax), s	5.3	* 1E2				* 1.1E2	24.5
Max Q Clear Time (g_c+I1), s	3.5	103.2				10.6	22.7
Green Ext Time (p_c), s	0.0	0.0				3.5	0.1

Intersection Summary	
HCM 6th Ctrl Delay	46.6
HCM 6th LOS	D

Notes

User approved pedestrian interval to be less than phase max green.

User approved volume balancing among the lanes for turning movement.

* HCM 6th computational engine requires equal clearance times for the phases crossing the barrier.

Movement	EBL	EBR	NBL	NBT	SBT	SBR
Lane Configurations						
Traffic Volume (vph)	75	55	80	1305	160	45
Future Volume (vph)	75	55	80	1305	160	45
Ideal Flow (vphpl)	1900	1900	1900	1900	1900	1900
Total Lost time (s)	5.0	5.0	6.5	6.5	6.5	6.5
Lane Util. Factor	1.00	1.00	1.00	1.00	1.00	1.00
Frt	1.00	0.85	1.00	1.00	1.00	0.85
Flt Protected	0.95	1.00	0.95	1.00	1.00	1.00
Satd. Flow (prot)	1641	1468	1752	1845	1743	1482
Flt Permitted	0.95	1.00	0.56	1.00	1.00	1.00
Satd. Flow (perm)	1641	1468	1039	1845	1743	1482
Peak-hour factor, PHF	0.92	0.92	0.92	0.92	0.92	0.92
Adj. Flow (vph)	82	60	87	1418	174	49
RTOR Reduction (vph)	0	54	0	0	0	20
Lane Group Flow (vph)	82	6	87	1418	174	29
Heavy Vehicles (%)	10%	10%	3%	3%	9%	9%
Turn Type	custom	custom	pm+pt	NA	NA	Perm
Protected Phases	3	3	5	2	6	
Permitted Phases	4	4	2			6
Actuated Green, G (s)	6.7	6.7	54.4	54.4	43.4	43.4
Effective Green, g (s)	6.7	6.7	54.4	54.4	43.4	43.4
Actuated g/C Ratio	0.09	0.09	0.75	0.75	0.60	0.60
Clearance Time (s)	5.0	5.0	6.5	6.5	6.5	6.5
Vehicle Extension (s)	2.0	2.0	2.0	5.0	5.0	5.0
Lane Grp Cap (vph)	151	135	822	1382	1041	885
v/s Ratio Prot	c0.05	0.00	0.01	c0.77	0.10	
v/s Ratio Perm			0.07			0.02
v/c Ratio	0.54	0.04	0.11	1.03	0.17	0.03
Uniform Delay, d1	31.5	30.0	2.7	9.1	6.5	6.0
Progression Factor	1.00	1.00	1.00	1.00	1.00	1.00
Incremental Delay, d2	2.1	0.0	0.0	31.1	0.2	0.0
Delay (s)	33.6	30.1	2.7	40.2	6.7	6.0
Level of Service	C	C	A	D	A	A
Approach Delay (s)	32.1			38.0	6.5	
Approach LOS	C			D	A	

Intersection Summary			
HCM 2000 Control Delay	33.8	HCM 2000 Level of Service	C
HCM 2000 Volume to Capacity ratio	1.15		
Actuated Cycle Length (s)	72.6	Sum of lost time (s)	21.0
Intersection Capacity Utilization	82.4%	ICU Level of Service	E
Analysis Period (min)	15		
c Critical Lane Group			

Movement	EBL	EBR	NBL	NBT	SBT	SBR
Lane Configurations						
Traffic Volume (vph)	315	5	20	1020	130	45
Future Volume (vph)	315	5	20	1020	130	45
Ideal Flow (vphpl)	1900	1900	1900	1900	1900	1900
Total Lost time (s)	5.0	5.0	6.0	6.0	6.0	5.0
Lane Util. Factor	1.00	1.00	1.00	1.00	1.00	1.00
Frt	1.00	0.85	1.00	1.00	1.00	0.85
Flt Protected	0.95	1.00	0.95	1.00	1.00	1.00
Satd. Flow (prot)	1770	1583	1752	1845	1810	1538
Flt Permitted	0.95	1.00	0.63	1.00	1.00	1.00
Satd. Flow (perm)	1770	1583	1169	1845	1810	1538
Peak-hour factor, PHF	0.91	0.91	0.91	0.91	0.91	0.91
Adj. Flow (vph)	346	5	22	1121	143	49
RTOR Reduction (vph)	0	4	0	0	0	6
Lane Group Flow (vph)	346	1	22	1121	143	43
Heavy Vehicles (%)	2%	2%	3%	3%	5%	5%
Turn Type	custom	custom	pm+pt	NA	NA	pm+ov
Protected Phases	3	3	5	2	6	3
Permitted Phases	4	4	2			6
Actuated Green, G (s)	40.7	40.7	128.3	128.3	118.9	159.6
Effective Green, g (s)	40.7	40.7	128.3	128.3	118.9	159.6
Actuated g/C Ratio	0.23	0.23	0.71	0.71	0.66	0.89
Clearance Time (s)	5.0	5.0	6.0	6.0	6.0	5.0
Vehicle Extension (s)	2.0	2.0	2.0	2.0	2.0	2.0
Lane Grp Cap (vph)	400	357	844	1315	1195	1363
v/s Ratio Prot	c0.20	0.00	0.00	c0.61	0.08	0.01
v/s Ratio Perm			0.02			0.02
v/c Ratio	0.86	0.00	0.03	0.85	0.12	0.03
Uniform Delay, d1	67.0	53.9	7.6	18.9	11.3	1.2
Progression Factor	1.00	1.00	1.00	1.00	1.00	1.00
Incremental Delay, d2	16.9	0.0	0.0	7.1	0.2	0.0
Delay (s)	83.9	53.9	7.6	26.1	11.5	1.2
Level of Service	F	D	A	C	B	A
Approach Delay (s)	83.5			25.7	8.8	
Approach LOS	F			C	A	

Intersection Summary			
HCM 2000 Control Delay	35.8	HCM 2000 Level of Service	D
HCM 2000 Volume to Capacity ratio	0.90		
Actuated Cycle Length (s)	180.0	Sum of lost time (s)	20.0
Intersection Capacity Utilization	80.3%	ICU Level of Service	D
Analysis Period (min)	15		
c Critical Lane Group			

Intersection	
Int Delay, s/veh	0.7

Movement	EBL	EBT	EBR	WBL	WBT	WBR	NBL	NBT	NBR	SBL	SBT	SBR
Lane Configurations												
Traffic Vol, veh/h	0	0	0	15	0	10	10	950	0	0	45	90
Future Vol, veh/h	0	0	0	15	0	10	10	950	0	0	45	90
Conflicting Peds, #/hr	0	0	0	0	0	0	0	0	0	0	0	0
Sign Control	Stop	Stop	Stop	Stop	Stop	Stop	Free	Free	Free	Free	Free	Free
RT Channelized	-	-	None	-	-	None	-	-	None	-	-	None
Storage Length	-	-	-	-	-	500	175	-	-	-	-	375
Veh in Median Storage, #	-	1	-	-	0	-	-	0	-	-	0	-
Grade, %	-	0	-	-	0	-	-	0	-	-	0	-
Peak Hour Factor	83	83	83	83	83	83	83	83	83	83	83	83
Heavy Vehicles, %	0	0	0	19	19	19	3	3	3	4	4	4
Mvmt Flow	0	0	0	18	0	12	12	1145	0	0	54	108

Major/Minor	Minor1			Major1			Major2		
Conflicting Flow All	1277	1331	1145	162	0	-	-	-	0
Stage 1	1169	1169	-	-	-	-	-	-	-
Stage 2	108	162	-	-	-	-	-	-	-
Critical Hdwy	6.59	6.69	6.39	4.13	-	-	-	-	-
Critical Hdwy Stg 1	5.59	5.69	-	-	-	-	-	-	-
Critical Hdwy Stg 2	5.59	5.69	-	-	-	-	-	-	-
Follow-up Hdwy	3.671	4.171	3.471	2.227	-	-	-	-	-
Pot Cap-1 Maneuver	169	143	224	1411	-	0	0	-	-
Stage 1	273	248	-	-	-	0	0	-	-
Stage 2	876	733	-	-	-	0	0	-	-
Platoon blocked, %					-			-	-
Mov Cap-1 Maneuver	167	0	224	1411	-	-	-	-	-
Mov Cap-2 Maneuver	167	0	-	-	-	-	-	-	-
Stage 1	271	0	-	-	-	-	-	-	-
Stage 2	876	0	-	-	-	-	-	-	-

Approach	WB	NB	SB
HCM Control Delay, s	26.3	0.1	0
HCM LOS	D		

Minor Lane/Major Mvmt	NBL	NBT	WBLn1	WBLn2	SBT	SBR
Capacity (veh/h)	1411	-	167	224	-	-
HCM Lane V/C Ratio	0.009	-	0.108	0.054	-	-
HCM Control Delay (s)	7.6	-	29.2	22	-	-
HCM Lane LOS	A	-	D	C	-	-
HCM 95th %tile Q(veh)	0	-	0.4	0.2	-	-

Movement	EBL	EBR	NBL	NBT	SBT	SBR
Lane Configurations						
Traffic Volume (veh/h)	605	10	80	345	60	5
Future Volume (veh/h)	605	10	80	345	60	5
Initial Q (Qb), veh	0	0	0	0	0	0
Ped-Bike Adj(A_pbT)	1.00	1.00	1.00			1.00
Parking Bus, Adj	1.00	1.00	1.00	1.00	1.00	1.00
Work Zone On Approach	No			No	No	
Adj Sat Flow, veh/h/ln	1856	1856	1870	1870	1811	1811
Adj Flow Rate, veh/h	738	12	98	421	73	6
Peak Hour Factor	0.82	0.82	0.82	0.82	0.82	0.82
Percent Heavy Veh, %	3	3	2	2	6	6
Cap, veh/h	800	712	158	571	632	52
Arrive On Green	0.45	0.45	0.38	0.38	0.38	0.38
Sat Flow, veh/h	1767	1572	266	1493	1651	136
Grp Volume(v), veh/h	738	12	519	0	0	79
Grp Sat Flow(s),veh/h/ln	1767	1572	1759	0	0	1787
Q Serve(g_s), s	30.0	0.3	14.1	0.0	0.0	2.2
Cycle Q Clear(g_c), s	30.0	0.3	19.6	0.0	0.0	2.2
Prop In Lane	1.00	1.00	0.19			0.08
Lane Grp Cap(c), veh/h	800	712	729	0	0	684
V/C Ratio(X)	0.92	0.02	0.71	0.00	0.00	0.12
Avail Cap(c_a), veh/h	1125	1001	1396	0	0	787
HCM Platoon Ratio	1.00	1.00	1.00	1.00	1.00	1.00
Upstream Filter(I)	1.00	1.00	1.00	0.00	0.00	1.00
Uniform Delay (d), s/veh	19.7	11.5	20.5	0.0	0.0	15.3
Incr Delay (d2), s/veh	9.7	0.0	2.8	0.0	0.0	0.2
Initial Q Delay(d3),s/veh	0.0	0.0	0.0	0.0	0.0	0.0
%ile BackOfQ(50%),veh/ln	13.2	0.1	8.1	0.0	0.0	0.9
Unsig. Movement Delay, s/veh						
LnGrp Delay(d),s/veh	29.3	11.6	23.3	0.0	0.0	15.4
LnGrp LOS	C	B	C	A	A	B
Approach Vol, veh/h	750			519	79	
Approach Delay, s/veh	29.1			23.3	15.4	
Approach LOS	C			C	B	

Timer - Assigned Phs		2		4		6
Phs Duration (G+Y+Rc), s		35.6		40.9		35.6
Change Period (Y+Rc), s		6.3		6.3		6.3
Max Green Setting (Gmax), s		58.7		48.7		33.7
Max Q Clear Time (g_c+I1), s		21.6		32.0		4.2
Green Ext Time (p_c), s		7.7		2.6		0.7

Intersection Summary	
HCM 6th Ctrl Delay	26.0
HCM 6th LOS	C

Movement	EBL	EBT	EBR	WBL	WBT	WBR	NBL	NBT	NBR	SBL	SBT	SBR
Lane Configurations												
Traffic Volume (veh/h)	160	10	20	5	0	5	5	1082	0	5	373	65
Future Volume (veh/h)	160	10	20	5	0	5	5	1082	0	5	373	65
Initial Q (Qb), veh	0	0	0	0	0	0	0	0	0	0	0	0
Ped-Bike Adj(A_pbT)	1.00		0.98	1.00		1.00	1.00		1.00	1.00		1.00
Parking Bus, Adj	1.00	1.00	1.00	1.00	1.00	1.00	1.00	1.00	1.00	1.00	1.00	1.00
Work Zone On Approach		No			No			No			No	
Adj Sat Flow, veh/h/ln	1885	1885	1885	1693	1693	1693	1752	1752	1752	1648	1648	1648
Adj Flow Rate, veh/h	174	11	22	5	0	5	5	1176	0	5	405	71
Peak Hour Factor	0.92	0.92	0.92	0.92	0.92	0.92	0.92	0.92	0.92	0.92	0.92	0.92
Percent Heavy Veh, %	1	1	1	14	14	14	10	10	10	17	17	17
Cap, veh/h	211	10	21	268	0	253	553	1191	0	68	1120	949
Arrive On Green	0.13	0.13	0.13	0.00	0.00	0.18	0.00	0.68	0.00	0.00	0.68	0.68
Sat Flow, veh/h	1223	77	155	1612	0	1434	1668	1752	0	1570	1648	1397
Grp Volume(v), veh/h	207	0	0	5	0	5	5	1176	0	5	405	71
Grp Sat Flow(s),veh/h/ln	1455	0	0	1612	0	1434	1668	1752	0	1570	1648	1397
Q Serve(g_s), s	18.6	0.0	0.0	0.4	0.0	0.4	0.1	91.2	0.0	0.1	14.5	2.4
Cycle Q Clear(g_c), s	18.6	0.0	0.0	0.4	0.0	0.4	0.1	91.2	0.0	0.1	14.5	2.4
Prop In Lane	0.84		0.11	1.00		1.00	1.00		0.00	1.00		1.00
Lane Grp Cap(c), veh/h	242	0	0	268	0	253	553	1191	0	68	1120	949
V/C Ratio(X)	0.86	0.00	0.00	0.02	0.00	0.02	0.01	0.99	0.00	0.07	0.36	0.07
Avail Cap(c_a), veh/h	242	0	0	349	0	335	594	1192	0	107	1122	951
HCM Platoon Ratio	1.00	1.00	1.00	1.00	1.00	1.00	1.00	1.00	1.00	1.00	1.00	1.00
Upstream Filter(I)	1.00	0.00	0.00	1.00	0.00	1.00	1.00	1.00	0.00	1.00	1.00	1.00
Uniform Delay (d), s/veh	61.0	0.0	0.0	50.3	0.0	47.4	7.8	21.8	0.0	37.2	9.5	7.5
Incr Delay (d2), s/veh	25.5	0.0	0.0	0.0	0.0	0.0	0.0	23.1	0.0	0.4	0.4	0.1
Initial Q Delay(d3),s/veh	0.0	0.0	0.0	0.0	0.0	0.0	0.0	0.0	0.0	0.0	0.0	0.0
%ile BackOfQ(50%),veh/ln	9.1	0.0	0.0	0.2	0.0	0.1	0.0	41.7	0.0	0.1	5.2	0.7
Unsig. Movement Delay, s/veh												
LnGrp Delay(d),s/veh	86.5	0.0	0.0	50.4	0.0	47.5	7.8	44.9	0.0	37.6	9.9	7.6
LnGrp LOS	F	A	A	D	A	D	A	D	A	D	A	A
Approach Vol, veh/h		207			10			1181			481	
Approach Delay, s/veh		86.5			48.9			44.7			9.9	
Approach LOS		F			D			D			A	

Timer - Assigned Phs	1	2	3	4	5	6		8
Phs Duration (G+Y+Rc), s	6.0	101.9	6.0	25.5	6.0	101.9		31.5
Change Period (Y+Rc), s	5.5	7.1	5.5	6.9	5.5	7.1		* 6.9
Max Green Setting (Gmax), s	4.0	94.9	7.5	18.6	4.0	94.9		* 33
Max Q Clear Time (g_c+I1), s	2.1	93.2	2.4	20.6	2.1	16.5		2.4
Green Ext Time (p_c), s	0.0	1.6	0.0	0.0	0.0	6.8		0.0

Intersection Summary	
HCM 6th Ctrl Delay	40.4
HCM 6th LOS	D

Notes

* HCM 6th computational engine requires equal clearance times for the phases crossing the barrier.

Intersection	
Int Delay, s/veh	2.7

Movement	EBL	EBT	WBT	WBR	SBL	SBR
Lane Configurations						
Traffic Vol, veh/h	42	100	105	10	5	39
Future Vol, veh/h	42	100	105	10	5	39
Conflicting Peds, #/hr	0	0	0	0	0	0
Sign Control	Free	Free	Free	Free	Stop	Stop
RT Channelized	-	None	-	None	-	None
Storage Length	450	-	-	-	0	-
Veh in Median Storage, #	-	0	0	-	0	-
Grade, %	-	0	0	-	0	-
Peak Hour Factor	82	82	82	82	82	82
Heavy Vehicles, %	86	86	77	77	54	54
Mvmt Flow	51	122	128	12	6	48

Major/Minor	Major1		Major2		Minor2	
Conflicting Flow All	140	0	-	0	358	134
Stage 1	-	-	-	-	134	-
Stage 2	-	-	-	-	224	-
Critical Hdwy	4.96	-	-	-	6.94	6.74
Critical Hdwy Stg 1	-	-	-	-	5.94	-
Critical Hdwy Stg 2	-	-	-	-	5.94	-
Follow-up Hdwy	2.974	-	-	-	3.986	3.786
Pot Cap-1 Maneuver	1057	-	-	-	549	793
Stage 1	-	-	-	-	779	-
Stage 2	-	-	-	-	705	-
Platoon blocked, %		-	-	-		
Mov Cap-1 Maneuver	1057	-	-	-	523	793
Mov Cap-2 Maneuver	-	-	-	-	523	-
Stage 1	-	-	-	-	742	-
Stage 2	-	-	-	-	705	-

Approach	EB	WB	SB
HCM Control Delay, s	2.5	0	10.2
HCM LOS			B

Minor Lane/Major Mvmt	EBL	EBT	WBT	WBR	SBLn1
Capacity (veh/h)	1057	-	-	-	749
HCM Lane V/C Ratio	0.048	-	-	-	0.072
HCM Control Delay (s)	8.6	-	-	-	10.2
HCM Lane LOS	A	-	-	-	B
HCM 95th %tile Q(veh)	0.2	-	-	-	0.2

Intersection	
Int Delay, s/veh	4.3

Movement	EBL	EBT	EBR	WBL	WBT	WBR	NBL	NBT	NBR	SBL	SBT	SBR
Lane Configurations												
Traffic Vol, veh/h	35	132	40	15	124	5	50	0	10	5	10	35
Future Vol, veh/h	35	132	40	15	124	5	50	0	10	5	10	35
Conflicting Peds, #/hr	0	0	0	0	0	0	0	0	0	0	0	0
Sign Control	Free	Free	Free	Free	Free	Free	Stop	Stop	Stop	Stop	Stop	Stop
RT Channelized	-	-	None	-	-	None	-	-	None	-	-	None
Storage Length	-	-	-	-	-	-	-	-	-	-	-	-
Veh in Median Storage, #	-	0	-	-	0	-	-	0	-	-	0	-
Grade, %	-	0	-	-	0	-	-	0	-	-	0	-
Peak Hour Factor	82	82	82	82	82	82	82	82	82	82	82	82
Heavy Vehicles, %	36	36	36	30	30	30	35	35	35	91	91	91
Mvmt Flow	43	161	49	18	151	6	61	0	12	6	12	43

Major/Minor	Major1			Major2			Minor1			Minor2		
Conflicting Flow All	157	0	0	210	0	0	490	465	105	357	486	154
Stage 1	-	-	-	-	-	-	272	272	-	190	190	-
Stage 2	-	-	-	-	-	-	218	193	-	167	296	-
Critical Hdwy	4.64	-	-	4.55	-	-	7.825	7.025	7.425	8.665	7.865	7.565
Critical Hdwy Stg 1	-	-	-	-	-	-	7.025	6.025	-	7.465	6.865	-
Critical Hdwy Stg 2	-	-	-	-	-	-	6.625	6.025	-	7.865	6.865	-
Follow-up Hdwy	2.542	-	-	2.485	-	-	3.8325	4.3325	3.6325	4.3645	4.8645	4.1645
Pot Cap-1 Maneuver	1222	-	-	1193	-	-	416	438	841	430	349	683
Stage 1	-	-	-	-	-	-	636	618	-	623	584	-
Stage 2	-	-	-	-	-	-	705	674	-	633	511	-
Platoon blocked, %		-	-		-	-						
Mov Cap-1 Maneuver	1222	-	-	1193	-	-	363	413	841	405	329	683
Mov Cap-2 Maneuver	-	-	-	-	-	-	363	413	-	405	329	-
Stage 1	-	-	-	-	-	-	611	593	-	598	574	-
Stage 2	-	-	-	-	-	-	636	663	-	599	491	-

Approach	EB	WB	NB	SB
HCM Control Delay, s	1.4	0.8	16	12.6
HCM LOS			C	B

Minor Lane/Major Mvmt	NBLn1	EBL	EBT	EBR	WBL	WBT	WBR	SBLn1
Capacity (veh/h)	401	1222	-	-	1193	-	-	532
HCM Lane V/C Ratio	0.182	0.035	-	-	0.015	-	-	0.115
HCM Control Delay (s)	16	8.1	0.1	-	8.1	0	-	12.6
HCM Lane LOS	C	A	A	-	A	A	-	B
HCM 95th %tile Q(veh)	0.7	0.1	-	-	0	-	-	0.4

Movement	WBL	WBR	NBT	NBR	SBL	SBT
Lane Configurations						
Traffic Volume (veh/h)	77	137	430	102	120	440
Future Volume (veh/h)	77	137	430	102	120	440
Initial Q (Qb), veh	0	0	0	0	0	0
Ped-Bike Adj(A_pbT)	1.00	1.00		1.00	1.00	
Parking Bus, Adj	1.00	1.00	1.00	1.00	1.00	1.00
Work Zone On Approach	No		No			No
Adj Sat Flow, veh/h/ln	1233	1233	1796	1796	1678	1678
Adj Flow Rate, veh/h	84	149	467	111	130	478
Peak Hour Factor	0.92	0.92	0.92	0.92	0.92	0.92
Percent Heavy Veh, %	45	45	7	7	15	15
Cap, veh/h	95	168	528	125	274	894
Arrive On Green	0.24	0.24	0.38	0.38	0.07	0.53
Sat Flow, veh/h	391	693	1403	333	1598	1678
Grp Volume(v), veh/h	234	0	0	578	130	478
Grp Sat Flow(s),veh/h/ln	1089	0	0	1736	1598	1678
Q Serve(g_s), s	13.3	0.0	0.0	19.9	3.0	11.9
Cycle Q Clear(g_c), s	13.3	0.0	0.0	19.9	3.0	11.9
Prop In Lane	0.36	0.64		0.19	1.00	
Lane Grp Cap(c), veh/h	264	0	0	653	274	894
V/C Ratio(X)	0.89	0.00	0.00	0.88	0.48	0.53
Avail Cap(c_a), veh/h	403	0	0	732	289	967
HCM Platoon Ratio	1.00	1.00	1.00	1.00	1.00	1.00
Upstream Filter(I)	1.00	0.00	0.00	1.00	1.00	1.00
Uniform Delay (d), s/veh	23.4	0.0	0.0	18.7	14.0	9.8
Incr Delay (d2), s/veh	14.2	0.0	0.0	12.1	1.8	0.7
Initial Q Delay(d3),s/veh	0.0	0.0	0.0	0.0	0.0	0.0
%ile BackOfQ(50%),veh/ln	4.2	0.0	0.0	9.3	1.0	3.8
Unsig. Movement Delay, s/veh						
LnGrp Delay(d),s/veh	37.6	0.0	0.0	30.8	15.9	10.5
LnGrp LOS	D	A	A	C	B	B
Approach Vol, veh/h	234		578			608
Approach Delay, s/veh	37.6		30.8			11.6
Approach LOS	D		C			B

Timer - Assigned Phs	1	2				6	8
Phs Duration (G+Y+Rc), s	10.0	32.2				42.2	21.8
Change Period (Y+Rc), s	5.5	* 8.1				* 8.1	6.3
Max Green Setting (Gmax), s	5.1	* 27				* 37	23.7
Max Q Clear Time (g_c+I1), s	5.0	21.9				13.9	15.3
Green Ext Time (p_c), s	0.0	2.2				4.5	0.5

Intersection Summary	
HCM 6th Ctrl Delay	23.7
HCM 6th LOS	C

Notes

User approved pedestrian interval to be less than phase max green.

User approved volume balancing among the lanes for turning movement.

* HCM 6th computational engine requires equal clearance times for the phases crossing the barrier.

Movement	EBL	EBR	NBL	NBT	SBT	SBR
Lane Configurations						
Traffic Volume (vph)	70	70	90	435	375	90
Future Volume (vph)	70	70	90	435	375	90
Ideal Flow (vphpl)	1900	1900	1900	1900	1900	1900
Total Lost time (s)	5.0	5.0	6.5	6.5	6.5	6.5
Lane Util. Factor	1.00	1.00	1.00	1.00	1.00	1.00
Frt	1.00	0.85	1.00	1.00	1.00	0.85
Flt Protected	0.95	1.00	0.95	1.00	1.00	1.00
Satd. Flow (prot)	1671	1495	1719	1810	1792	1524
Flt Permitted	0.95	1.00	0.39	1.00	1.00	1.00
Satd. Flow (perm)	1671	1495	698	1810	1792	1524
Peak-hour factor, PHF	0.96	0.96	0.96	0.96	0.96	0.96
Adj. Flow (vph)	73	73	94	453	391	94
RTOR Reduction (vph)	0	65	0	0	0	44
Lane Group Flow (vph)	73	8	94	453	391	50
Heavy Vehicles (%)	8%	8%	5%	5%	6%	6%
Turn Type	custom	custom	pm+pt	NA	NA	Perm
Protected Phases	3	3	5	2	6	
Permitted Phases	4	4	2			6
Actuated Green, G (s)	5.5	5.5	34.9	34.9	22.9	22.9
Effective Green, g (s)	5.5	5.5	34.9	34.9	22.9	22.9
Actuated g/C Ratio	0.11	0.11	0.67	0.67	0.44	0.44
Clearance Time (s)	5.0	5.0	6.5	6.5	6.5	6.5
Vehicle Extension (s)	2.0	2.0	2.0	5.0	5.0	5.0
Lane Grp Cap (vph)	177	158	577	1217	790	672
v/s Ratio Prot	c0.04	0.01	0.02	c0.25	c0.22	
v/s Ratio Perm			0.09			0.03
v/c Ratio	0.41	0.05	0.16	0.37	0.49	0.08
Uniform Delay, d1	21.7	20.8	3.6	3.7	10.4	8.4
Progression Factor	1.00	1.00	1.00	1.00	1.00	1.00
Incremental Delay, d2	0.6	0.0	0.0	0.4	1.0	0.1
Delay (s)	22.3	20.9	3.7	4.1	11.4	8.5
Level of Service	C	C	A	A	B	A
Approach Delay (s)	21.6			4.0	10.8	
Approach LOS	C			A	B	

Intersection Summary			
HCM 2000 Control Delay	9.0	HCM 2000 Level of Service	A
HCM 2000 Volume to Capacity ratio	0.55		
Actuated Cycle Length (s)	51.9	Sum of lost time (s)	21.0
Intersection Capacity Utilization	43.9%	ICU Level of Service	A
Analysis Period (min)	15		
c Critical Lane Group			

Movement	EBL	EBR	NBL	NBT	SBT	SBR
Lane Configurations						
Traffic Volume (vph)	145	10	10	340	290	115
Future Volume (vph)	145	10	10	340	290	115
Ideal Flow (vphpl)	1900	1900	1900	1900	1900	1900
Total Lost time (s)	5.0	5.0	6.0	6.0	6.0	5.0
Lane Util. Factor	1.00	1.00	1.00	1.00	1.00	1.00
Frpb, ped/bikes	1.00	1.00	1.00	1.00	1.00	0.99
Flpb, ped/bikes	1.00	1.00	1.00	1.00	1.00	1.00
Frt	1.00	0.85	1.00	1.00	1.00	0.85
Flt Protected	0.95	1.00	0.95	1.00	1.00	1.00
Satd. Flow (prot)	1671	1495	1736	1827	1792	1505
Flt Permitted	0.95	1.00	0.40	1.00	1.00	1.00
Satd. Flow (perm)	1671	1495	723	1827	1792	1505
Peak-hour factor, PHF	0.95	0.95	0.95	0.95	0.95	0.95
Adj. Flow (vph)	153	11	11	358	305	121
RTOR Reduction (vph)	0	9	0	0	0	54
Lane Group Flow (vph)	153	2	11	358	305	67
Confl. Bikes (#/hr)						1
Heavy Vehicles (%)	8%	8%	4%	4%	6%	6%
Turn Type	custom	custom	pm+pt	NA	NA	pm+ov
Protected Phases	3	3	5	2	6	3
Permitted Phases	4	4	2			6
Actuated Green, G (s)	8.9	8.9	20.0	20.0	13.3	22.2
Effective Green, g (s)	8.9	8.9	20.0	20.0	13.3	22.2
Actuated g/C Ratio	0.22	0.22	0.50	0.50	0.33	0.56
Clearance Time (s)	5.0	5.0	6.0	6.0	6.0	5.0
Vehicle Extension (s)	2.0	2.0	2.0	2.0	2.0	2.0
Lane Grp Cap (vph)	372	333	380	915	597	837
v/s Ratio Prot	c0.09	0.00	0.00	c0.20	c0.17	0.02
v/s Ratio Perm			0.01			0.03
v/c Ratio	0.41	0.01	0.03	0.39	0.51	0.08
Uniform Delay, d1	13.3	12.1	5.5	6.2	10.7	4.1
Progression Factor	1.00	1.00	1.00	1.00	1.00	1.00
Incremental Delay, d2	0.3	0.0	0.0	0.1	0.3	0.0
Delay (s)	13.5	12.1	5.5	6.3	11.0	4.1
Level of Service	B	B	A	A	B	A
Approach Delay (s)	13.4			6.3	9.0	
Approach LOS	B			A	A	

Intersection Summary			
HCM 2000 Control Delay	8.7	HCM 2000 Level of Service	A
HCM 2000 Volume to Capacity ratio	0.61		
Actuated Cycle Length (s)	39.9	Sum of lost time (s)	20.0
Intersection Capacity Utilization	35.1%	ICU Level of Service	A
Analysis Period (min)	15		

c Critical Lane Group

Intersection	
Int Delay, s/veh	1.1

Movement	EBL	EBT	EBR	WBL	WBT	WBR	NBL	NBT	NBR	SBL	SBT	SBR
Lane Configurations												
Traffic Vol, veh/h	0	0	0	25	0	15	20	230	0	0	100	165
Future Vol, veh/h	0	0	0	25	0	15	20	230	0	0	100	165
Conflicting Peds, #/hr	0	0	0	0	0	0	0	0	0	0	0	0
Sign Control	Stop	Stop	Stop	Stop	Stop	Stop	Free	Free	Free	Free	Free	Free
RT Channelized	-	-	None	-	-	None	-	-	None	-	-	None
Storage Length	-	-	-	-	-	500	175	-	-	-	-	375
Veh in Median Storage, #	-	1	-	-	0	-	-	0	-	-	0	-
Grade, %	-	0	-	-	0	-	-	0	-	-	0	-
Peak Hour Factor	92	92	92	92	92	92	92	92	92	92	92	92
Heavy Vehicles, %	0	0	0	7	7	7	6	6	6	4	4	4
Mvmt Flow	0	0	0	27	0	16	22	250	0	0	109	179

Major/Minor	Minor1		Major1		Major2				
Conflicting Flow All	493	582	250	288	0	-	-	-	0
Stage 1	294	294	-	-	-	-	-	-	-
Stage 2	199	288	-	-	-	-	-	-	-
Critical Hdwy	6.47	6.57	6.27	4.16	-	-	-	-	-
Critical Hdwy Stg 1	5.47	5.57	-	-	-	-	-	-	-
Critical Hdwy Stg 2	5.47	5.57	-	-	-	-	-	-	-
Follow-up Hdwy	3.563	4.063	3.363	2.254	-	-	-	-	-
Pot Cap-1 Maneuver	526	418	777	1251	-	0	0	-	-
Stage 1	745	661	-	-	-	0	0	-	-
Stage 2	823	665	-	-	-	0	0	-	-
Platoon blocked, %					-			-	-
Mov Cap-1 Maneuver	517	0	777	1251	-	-	-	-	-
Mov Cap-2 Maneuver	517	0	-	-	-	-	-	-	-
Stage 1	732	0	-	-	-	-	-	-	-
Stage 2	823	0	-	-	-	-	-	-	-

Approach	WB	NB	SB
HCM Control Delay, s	11.3	0.6	0
HCM LOS	B		

Minor Lane/Major Mvmt	NBL	NBT	WBLn1	WBLn2	SBT	SBR
Capacity (veh/h)	1251	-	517	777	-	-
HCM Lane V/C Ratio	0.017	-	0.053	0.021	-	-
HCM Control Delay (s)	7.9	-	12.3	9.7	-	-
HCM Lane LOS	A	-	B	A	-	-
HCM 95th %tile Q(veh)	0.1	-	0.2	0.1	-	-

Movement	EBL	EBR	NBL	NBT	SBT	SBR
Lane Configurations						
Traffic Volume (veh/h)	160	10	25	110	115	15
Future Volume (veh/h)	160	10	25	110	115	15
Initial Q (Qb), veh	0	0	0	0	0	0
Ped-Bike Adj(A_pbT)	1.00	1.00	1.00			0.98
Parking Bus, Adj	1.00	1.00	1.00	1.00	1.00	1.00
Work Zone On Approach	No			No	No	
Adj Sat Flow, veh/h/ln	1841	1841	1811	1811	1752	1752
Adj Flow Rate, veh/h	184	11	29	126	132	17
Peak Hour Factor	0.87	0.87	0.87	0.87	0.87	0.87
Percent Heavy Veh, %	4	4	6	6	10	10
Cap, veh/h	391	348	234	259	297	38
Arrive On Green	0.22	0.22	0.20	0.20	0.20	0.20
Sat Flow, veh/h	1753	1560	188	1325	1516	195
Grp Volume(v), veh/h	184	11	155	0	0	149
Grp Sat Flow(s),veh/h/ln	1753	1560	1513	0	0	1712
Q Serve(g_s), s	2.0	0.1	0.5	0.0	0.0	1.7
Cycle Q Clear(g_c), s	2.0	0.1	2.2	0.0	0.0	1.7
Prop In Lane	1.00	1.00	0.19			0.11
Lane Grp Cap(c), veh/h	391	348	493	0	0	335
V/C Ratio(X)	0.47	0.03	0.31	0.00	0.00	0.44
Avail Cap(c_a), veh/h	3937	3503	4645	0	0	2660
HCM Platoon Ratio	1.00	1.00	1.00	1.00	1.00	1.00
Upstream Filter(I)	1.00	1.00	1.00	0.00	0.00	1.00
Uniform Delay (d), s/veh	7.3	6.6	7.8	0.0	0.0	7.7
Incr Delay (d2), s/veh	0.9	0.0	0.8	0.0	0.0	2.0
Initial Q Delay(d3),s/veh	0.0	0.0	0.0	0.0	0.0	0.0
%ile BackOfQ(50%),veh/ln	0.5	0.0	0.4	0.0	0.0	0.5
Unsig. Movement Delay, s/veh						
LnGrp Delay(d),s/veh	8.2	6.6	8.6	0.0	0.0	9.6
LnGrp LOS	A	A	A	A	A	A
Approach Vol, veh/h	195			155	149	
Approach Delay, s/veh	8.1			8.6	9.6	
Approach LOS	A			A	A	

Timer - Assigned Phs		2		4		6
Phs Duration (G+Y+Rc), s		10.5		11.1		10.5
Change Period (Y+Rc), s		6.3		6.3		6.3
Max Green Setting (Gmax), s		58.7		48.7		33.7
Max Q Clear Time (g_c+I1), s		4.2		4.0		3.7
Green Ext Time (p_c), s		2.0		0.6		1.6

Intersection Summary	
HCM 6th Ctrl Delay	8.7
HCM 6th LOS	A

Movement	EBL	EBT	EBR	WBL	WBT	WBR	NBL	NBT	NBR	SBL	SBT	SBR
Lane Configurations												
Traffic Volume (veh/h)	90	10	15	5	0	10	15	557	10	15	525	85
Future Volume (veh/h)	90	10	15	5	0	10	15	557	10	15	525	85
Initial Q (Qb), veh	0	0	0	0	0	0	0	0	0	0	0	0
Ped-Bike Adj(A_pbT)	1.00		0.98	1.00		1.00	1.00		0.98	1.00		1.00
Parking Bus, Adj	1.00	1.00	1.00	1.00	1.00	1.00	1.00	1.00	1.00	1.00	1.00	1.00
Work Zone On Approach		No			No			No			No	
Adj Sat Flow, veh/h/ln	1856	1856	1856	1559	1559	1559	1663	1663	1663	1678	1678	1678
Adj Flow Rate, veh/h	95	11	16	5	0	11	16	586	11	16	553	89
Peak Hour Factor	0.95	0.95	0.95	0.95	0.95	0.95	0.95	0.95	0.95	0.95	0.95	0.95
Percent Heavy Veh, %	3	3	3	23	23	23	16	16	16	15	15	15
Cap, veh/h	223	17	21	298	0	266	286	775	15	267	800	678
Arrive On Green	0.11	0.11	0.11	0.00	0.00	0.20	0.01	0.48	0.48	0.01	0.48	0.48
Sat Flow, veh/h	1103	156	190	1485	0	1321	1584	1626	31	1598	1678	1422
Grp Volume(v), veh/h	122	0	0	5	0	11	16	0	597	16	553	89
Grp Sat Flow(s),veh/h/ln	1449	0	0	1485	0	1321	1584	0	1657	1598	1678	1422
Q Serve(g_s), s	5.0	0.0	0.0	0.2	0.0	0.4	0.3	0.0	18.5	0.3	16.2	2.2
Cycle Q Clear(g_c), s	5.1	0.0	0.0	0.2	0.0	0.4	0.3	0.0	18.5	0.3	16.2	2.2
Prop In Lane	0.78		0.13	1.00		1.00	1.00		0.02	1.00		1.00
Lane Grp Cap(c), veh/h	261	0	0	298	0	266	286	0	789	267	800	678
V/C Ratio(X)	0.47	0.00	0.00	0.02	0.00	0.04	0.06	0.00	0.76	0.06	0.69	0.13
Avail Cap(c_a), veh/h	518	0	0	635	0	927	885	0	1526	744	1412	1196
HCM Platoon Ratio	1.00	1.00	1.00	1.00	1.00	1.00	1.00	1.00	1.00	1.00	1.00	1.00
Upstream Filter(I)	1.00	0.00	0.00	1.00	0.00	1.00	1.00	0.00	1.00	1.00	1.00	1.00
Uniform Delay (d), s/veh	27.2	0.0	0.0	23.0	0.0	20.2	10.4	0.0	13.5	11.1	12.8	9.2
Incr Delay (d2), s/veh	1.8	0.0	0.0	0.0	0.0	0.1	0.1	0.0	3.2	0.1	2.3	0.2
Initial Q Delay(d3),s/veh	0.0	0.0	0.0	0.0	0.0	0.0	0.0	0.0	0.0	0.0	0.0	0.0
%ile BackOfQ(50%),veh/ln	1.8	0.0	0.0	0.1	0.0	0.1	0.1	0.0	6.6	0.1	5.7	0.6
Unsig. Movement Delay, s/veh												
LnGrp Delay(d),s/veh	29.0	0.0	0.0	23.0	0.0	20.3	10.5	0.0	16.6	11.2	15.1	9.4
LnGrp LOS	C	A	A	C	A	C	B	A	B	B	B	A
Approach Vol, veh/h		122			16			613			658	
Approach Delay, s/veh		29.0			21.1			16.5			14.3	
Approach LOS		C			C			B			B	

Timer - Assigned Phs	1	2	3	4	5	6		8
Phs Duration (G+Y+Rc), s	6.2	37.1	5.8	13.8	6.2	37.1		19.6
Change Period (Y+Rc), s	5.5	7.1	5.5	6.9	5.5	7.1		* 6.9
Max Green Setting (Gmax), s	19.5	57.9	14.5	18.1	24.5	52.9		* 44
Max Q Clear Time (g_c+I1), s	2.3	20.5	2.2	7.1	2.3	18.2		2.4
Green Ext Time (p_c), s	0.0	9.4	0.0	0.5	0.0	9.1		0.0

Intersection Summary	
HCM 6th Ctrl Delay	16.6
HCM 6th LOS	B

Notes

* HCM 6th computational engine requires equal clearance times for the phases crossing the barrier.

Intersection	
Int Delay, s/veh	2.7

Movement	EBL	EBT	WBT	WBR	SBL	SBR
Lane Configurations						
Traffic Vol, veh/h	22	115	190	5	16	70
Future Vol, veh/h	22	115	190	5	16	70
Conflicting Peds, #/hr	0	0	0	0	0	0
Sign Control	Free	Free	Free	Free	Stop	Stop
RT Channelized	-	None	-	None	-	None
Storage Length	450	-	-	-	0	-
Veh in Median Storage, #	-	0	0	-	0	-
Grade, %	-	0	0	-	0	-
Peak Hour Factor	82	82	82	82	82	82
Heavy Vehicles, %	8	8	2	2	15	15
Mvmt Flow	27	140	232	6	20	85

Major/Minor	Major1		Major2		Minor2	
Conflicting Flow All	238	0	-	0	429	235
Stage 1	-	-	-	-	235	-
Stage 2	-	-	-	-	194	-
Critical Hdwy	4.18	-	-	-	6.55	6.35
Critical Hdwy Stg 1	-	-	-	-	5.55	-
Critical Hdwy Stg 2	-	-	-	-	5.55	-
Follow-up Hdwy	2.272	-	-	-	3.635	3.435
Pot Cap-1 Maneuver	1294	-	-	-	559	773
Stage 1	-	-	-	-	774	-
Stage 2	-	-	-	-	809	-
Platoon blocked, %		-	-	-		
Mov Cap-1 Maneuver	1294	-	-	-	547	773
Mov Cap-2 Maneuver	-	-	-	-	547	-
Stage 1	-	-	-	-	758	-
Stage 2	-	-	-	-	809	-

Approach	EB	WB	SB
HCM Control Delay, s	1.3	0	10.9
HCM LOS			B

Minor Lane/Major Mvmt	EBL	EBT	WBT	WBR	SBLn1
Capacity (veh/h)	1294	-	-	-	718
HCM Lane V/C Ratio	0.021	-	-	-	0.146
HCM Control Delay (s)	7.8	-	-	-	10.9
HCM Lane LOS	A	-	-	-	B
HCM 95th %tile Q(veh)	0.1	-	-	-	0.5

Intersection	
Int Delay, s/veh	2.6

Movement	EBL	EBT	EBR	WBL	WBT	WBR	NBL	NBT	NBR	SBL	SBT	SBR
Lane Configurations												
Traffic Vol, veh/h	5	122	70	80	185	5	20	0	10	5	5	10
Future Vol, veh/h	5	122	70	80	185	5	20	0	10	5	5	10
Conflicting Peds, #/hr	0	0	0	0	0	0	0	0	0	0	0	0
Sign Control	Free	Free	Free	Free	Free	Free	Stop	Stop	Stop	Stop	Stop	Stop
RT Channelized	-	-	None	-	-	None	-	-	None	-	-	None
Storage Length	-	-	-	-	-	-	-	-	-	-	-	-
Veh in Median Storage, #	-	0	-	-	0	-	-	0	-	-	0	-
Grade, %	-	0	-	-	0	-	-	0	-	-	0	-
Peak Hour Factor	89	89	89	89	89	89	89	89	89	89	89	89
Heavy Vehicles, %	9	9	9	7	7	7	0	0	0	53	53	53
Mvmt Flow	6	137	79	90	208	6	22	0	11	6	6	11

Major/Minor	Major1			Major2			Minor1			Minor2		
Conflicting Flow All	214	0	0	216	0	0	589	583	108	472	619	211
Stage 1	-	-	-	-	-	-	189	189	-	391	391	-
Stage 2	-	-	-	-	-	-	400	394	-	81	228	-
Critical Hdwy	4.235	-	-	4.205	-	-	7.3	6.5	6.9	8.095	7.295	6.995
Critical Hdwy Stg 1	-	-	-	-	-	-	6.5	5.5	-	6.895	6.295	-
Critical Hdwy Stg 2	-	-	-	-	-	-	6.1	5.5	-	7.295	6.295	-
Follow-up Hdwy	2.2855	-	-	2.2665	-	-	3.5	4	3.3	4.0035	4.5035	3.8035
Pot Cap-1 Maneuver	1310	-	-	1320	-	-	409	427	932	400	328	701
Stage 1	-	-	-	-	-	-	800	748	-	524	510	-
Stage 2	-	-	-	-	-	-	630	609	-	798	617	-
Platoon blocked, %		-	-		-	-						
Mov Cap-1 Maneuver	1310	-	-	1320	-	-	372	392	932	370	301	701
Mov Cap-2 Maneuver	-	-	-	-	-	-	372	392	-	370	301	-
Stage 1	-	-	-	-	-	-	796	744	-	521	471	-
Stage 2	-	-	-	-	-	-	565	562	-	784	614	-

Approach	EB	WB	NB	SB
HCM Control Delay, s	0.2	2.3	13.3	13.4
HCM LOS			B	B

Minor Lane/Major Mvmt	NBLn1	EBL	EBT	EBR	WBL	WBT	WBR	SBLn1
Capacity (veh/h)	465	1310	-	-	1320	-	-	451
HCM Lane V/C Ratio	0.072	0.004	-	-	0.068	-	-	0.05
HCM Control Delay (s)	13.3	7.8	0	-	7.9	0	-	13.4
HCM Lane LOS	B	A	A	-	A	A	-	B
HCM 95th %tile Q(veh)	0.2	0	-	-	0.2	-	-	0.2

Movement	WBL	WBR	NBT	NBR	SBL	SBT
Lane Configurations						
Traffic Volume (veh/h)	108	102	425	66	146	1185
Future Volume (veh/h)	108	102	425	66	146	1185
Initial Q (Qb), veh	0	0	0	0	0	0
Ped-Bike Adj(A_pbT)	1.00	1.00		1.00	1.00	
Parking Bus, Adj	1.00	1.00	1.00	1.00	1.00	1.00
Work Zone On Approach	No		No			No
Adj Sat Flow, veh/h/ln	1781	1781	1826	1826	1885	1885
Adj Flow Rate, veh/h	116	110	457	71	157	1274
Peak Hour Factor	0.93	0.93	0.93	0.93	0.93	0.93
Percent Heavy Veh, %	8	8	5	5	1	1
Cap, veh/h	128	122	992	154	571	1377
Arrive On Green	0.16	0.16	0.64	0.64	0.04	0.73
Sat Flow, veh/h	818	776	1543	240	1795	1885
Grp Volume(v), veh/h	227	0	0	528	157	1274
Grp Sat Flow(s),veh/h/ln	1601	0	0	1783	1795	1885
Q Serve(g_s), s	17.8	0.0	0.0	19.2	3.6	71.9
Cycle Q Clear(g_c), s	17.8	0.0	0.0	19.2	3.6	71.9
Prop In Lane	0.51	0.48		0.13	1.00	
Lane Grp Cap(c), veh/h	251	0	0	1147	571	1377
V/C Ratio(X)	0.90	0.00	0.00	0.46	0.27	0.92
Avail Cap(c_a), veh/h	300	0	0	1256	588	1496
HCM Platoon Ratio	1.00	1.00	1.00	1.00	1.00	1.00
Upstream Filter(I)	1.00	0.00	0.00	1.00	1.00	1.00
Uniform Delay (d), s/veh	53.0	0.0	0.0	11.6	8.3	14.3
Incr Delay (d2), s/veh	26.0	0.0	0.0	0.4	0.4	9.9
Initial Q Delay(d3),s/veh	0.0	0.0	0.0	0.0	0.0	0.0
%ile BackOfQ(50%),veh/ln	9.0	0.0	0.0	7.5	1.4	30.1
Unsig. Movement Delay, s/veh						
LnGrp Delay(d),s/veh	79.0	0.0	0.0	12.0	8.7	24.2
LnGrp LOS	E	A	A	B	A	C
Approach Vol, veh/h	227		528			1431
Approach Delay, s/veh	79.0		12.0			22.5
Approach LOS	E		B			C

Timer - Assigned Phs	1	2				6	8
Phs Duration (G+Y+Rc), s	11.2	90.4				101.6	26.4
Change Period (Y+Rc), s	5.5	* 8.1				* 8.1	6.3
Max Green Setting (Gmax), s	6.9	* 90				* 1E2	24.0
Max Q Clear Time (g_c+I1), s	5.6	21.2				73.9	19.8
Green Ext Time (p_c), s	0.1	6.2				19.6	0.3

Intersection Summary	
HCM 6th Ctrl Delay	25.8
HCM 6th LOS	C

Notes

User approved pedestrian interval to be less than phase max green.

User approved volume balancing among the lanes for turning movement.

* HCM 6th computational engine requires equal clearance times for the phases crossing the barrier.

Movement	EBL	EBR	NBL	NBT	SBT	SBR
Lane Configurations						
Traffic Volume (vph)	55	280	80	331	1285	90
Future Volume (vph)	55	280	80	331	1285	90
Ideal Flow (vphpl)	1900	1900	1900	1900	1900	1900
Total Lost time (s)	5.0	5.0	6.5	6.5	6.5	6.5
Lane Util. Factor	1.00	1.00	1.00	1.00	1.00	1.00
Frt	1.00	0.85	1.00	1.00	1.00	0.85
Flt Protected	0.95	1.00	0.95	1.00	1.00	1.00
Satd. Flow (prot)	1752	1568	1787	1881	1881	1599
Flt Permitted	0.95	1.00	0.02	1.00	1.00	1.00
Satd. Flow (perm)	1752	1568	42	1881	1881	1599
Peak-hour factor, PHF	0.94	0.94	0.94	0.94	0.94	0.94
Adj. Flow (vph)	59	298	85	352	1367	96
RTOR Reduction (vph)	0	91	0	0	0	6
Lane Group Flow (vph)	59	207	85	352	1367	90
Heavy Vehicles (%)	3%	3%	1%	1%	1%	1%
Turn Type	custom	custom	pm+pt	NA	NA	Perm
Protected Phases	3	3	5	2	6	
Permitted Phases	4	4	2			6
Actuated Green, G (s)	35.7	35.7	192.8	192.8	173.8	173.8
Effective Green, g (s)	35.7	35.7	192.8	192.8	173.8	173.8
Actuated g/C Ratio	0.15	0.15	0.80	0.80	0.72	0.72
Clearance Time (s)	5.0	5.0	6.5	6.5	6.5	6.5
Vehicle Extension (s)	2.0	2.0	2.0	5.0	5.0	5.0
Lane Grp Cap (vph)	260	233	124	1511	1362	1157
v/s Ratio Prot	0.03	c0.13	c0.04	0.19	c0.73	
v/s Ratio Perm			0.52			0.06
v/c Ratio	0.23	0.89	0.69	0.23	1.00	0.08
Uniform Delay, d1	90.0	100.2	91.7	5.7	33.1	9.7
Progression Factor	1.00	1.00	0.97	1.65	1.00	1.00
Incremental Delay, d2	0.2	30.1	11.5	0.4	25.3	0.1
Delay (s)	90.2	130.3	100.1	9.8	58.4	9.8
Level of Service	F	F	F	A	E	A
Approach Delay (s)	123.6			27.3	55.2	
Approach LOS	F			C	E	

Intersection Summary			
HCM 2000 Control Delay	60.6	HCM 2000 Level of Service	E
HCM 2000 Volume to Capacity ratio	0.98		
Actuated Cycle Length (s)	240.0	Sum of lost time (s)	21.0
Intersection Capacity Utilization	94.6%	ICU Level of Service	F
Analysis Period (min)	15		
c Critical Lane Group			

Movement	EBL	EBR	NBL	NBT	SBT	SBR
Lane Configurations						
Traffic Volume (vph)	121	20	10	270	1225	245
Future Volume (vph)	121	20	10	270	1225	245
Ideal Flow (vphpl)	1900	1900	1900	1900	1900	1900
Total Lost time (s)	5.0	5.0	6.0	6.0	6.0	5.0
Lane Util. Factor	1.00	1.00	1.00	1.00	1.00	1.00
Frt	1.00	0.85	1.00	1.00	1.00	0.85
Flt Protected	0.95	1.00	0.95	1.00	1.00	1.00
Satd. Flow (prot)	1787	1599	1787	1881	1881	1599
Flt Permitted	0.95	1.00	0.04	1.00	1.00	1.00
Satd. Flow (perm)	1787	1599	79	1881	1881	1599
Peak-hour factor, PHF	0.91	0.91	0.91	0.91	0.91	0.91
Adj. Flow (vph)	133	22	11	297	1346	269
RTOR Reduction (vph)	0	20	0	0	0	22
Lane Group Flow (vph)	133	2	11	297	1346	247
Heavy Vehicles (%)	1%	1%	1%	1%	1%	1%
Turn Type	custom	custom	pm+pt	NA	NA	pm+ov
Protected Phases	3	3	5	2	6	3
Permitted Phases	4	4	2			6
Actuated Green, G (s)	13.3	13.3	95.7	95.7	88.7	102.0
Effective Green, g (s)	13.3	13.3	95.7	95.7	88.7	102.0
Actuated g/C Ratio	0.11	0.11	0.80	0.80	0.74	0.85
Clearance Time (s)	5.0	5.0	6.0	6.0	6.0	5.0
Vehicle Extension (s)	2.0	2.0	2.0	2.0	2.0	2.0
Lane Grp Cap (vph)	198	177	77	1500	1390	1359
v/s Ratio Prot	c0.07	0.00	0.00	c0.16	c0.72	0.02
v/s Ratio Perm			0.11			0.13
v/c Ratio	0.67	0.01	0.14	0.20	0.97	0.18
Uniform Delay, d1	51.3	47.5	37.0	2.9	14.4	1.6
Progression Factor	1.00	1.00	1.00	1.00	1.48	1.11
Incremental Delay, d2	6.9	0.0	0.3	0.3	7.7	0.0
Delay (s)	58.1	47.5	37.3	3.2	29.0	1.8
Level of Service	E	D	D	A	C	A
Approach Delay (s)	56.6			4.4	24.5	
Approach LOS	E			A	C	

Intersection Summary			
HCM 2000 Control Delay	23.9	HCM 2000 Level of Service	C
HCM 2000 Volume to Capacity ratio	0.96		
Actuated Cycle Length (s)	120.0	Sum of lost time (s)	20.0
Intersection Capacity Utilization	80.3%	ICU Level of Service	D
Analysis Period (min)	15		
c Critical Lane Group			

Intersection	
Int Delay, s/veh	8.7

Movement	EBL	EBT	EBR	WBL	WBT	WBR	NBL	NBT	NBR	SBL	SBT	SBR
Lane Configurations												
Traffic Vol, veh/h	0	0	0	180	0	15	20	250	0	0	500	675
Future Vol, veh/h	0	0	0	180	0	15	20	250	0	0	500	675
Conflicting Peds, #/hr	0	0	0	0	0	0	0	0	0	0	0	0
Sign Control	Stop	Stop	Stop	Stop	Stop	Stop	Free	Free	Free	Free	Free	Free
RT Channelized	-	-	None	-	-	None	-	-	None	-	-	None
Storage Length	-	-	-	-	-	500	175	-	-	-	-	375
Veh in Median Storage, #	-	1	-	-	0	-	-	0	-	-	0	-
Grade, %	-	0	-	-	0	-	-	0	-	-	0	-
Peak Hour Factor	98	98	98	98	98	98	98	98	98	98	98	98
Heavy Vehicles, %	0	0	0	1	1	1	1	1	1	1	1	1
Mvmt Flow	0	0	0	184	0	15	20	255	0	0	510	689

Major/Minor	Minor1			Major1			Major2		
Conflicting Flow All	1150	1494	255	1199	0	-	-	-	0
Stage 1	295	295	-	-	-	-	-	-	-
Stage 2	855	1199	-	-	-	-	-	-	-
Critical Hdwy	6.41	6.51	6.21	4.11	-	-	-	-	-
Critical Hdwy Stg 1	5.41	5.51	-	-	-	-	-	-	-
Critical Hdwy Stg 2	5.41	5.51	-	-	-	-	-	-	-
Follow-up Hdwy	3.509	4.009	3.309	2.209	-	-	-	-	-
Pot Cap-1 Maneuver	220	124	786	586	-	0	0	-	-
Stage 1	758	671	-	-	-	0	0	-	-
Stage 2	418	260	-	-	-	0	0	-	-
Platoon blocked, %					-			-	-
Mov Cap-1 Maneuver	213	0	786	586	-	-	-	-	-
Mov Cap-2 Maneuver	213	0	-	-	-	-	-	-	-
Stage 1	732	0	-	-	-	-	-	-	-
Stage 2	418	0	-	-	-	-	-	-	-

Approach	WB	NB	SB
HCM Control Delay, s	72.4	0.8	0
HCM LOS	F		

Minor Lane/Major Mvmt	NBL	NBT	WBLn1	WBLn2	SBT	SBR
Capacity (veh/h)	586	-	213	786	-	-
HCM Lane V/C Ratio	0.035	-	0.862	0.019	-	-
HCM Control Delay (s)	11.4	-	77.6	9.7	-	-
HCM Lane LOS	B	-	F	A	-	-
HCM 95th %tile Q(veh)	0.1	-	6.7	0.1	-	-

Movement	EBL	EBR	NBL	NBT	SBT	SBR
Lane Configurations						
Traffic Volume (veh/h)	150	20	30	120	685	15
Future Volume (veh/h)	150	20	30	120	685	15
Initial Q (Qb), veh	0	0	0	0	0	0
Ped-Bike Adj(A_pbT)	1.00	1.00	1.00			1.00
Parking Bus, Adj	1.00	1.00	1.00	1.00	1.00	1.00
Work Zone On Approach	No			No	No	
Adj Sat Flow, veh/h/ln	1885	1885	1885	1885	1900	1900
Adj Flow Rate, veh/h	156	21	31	125	714	16
Peak Hour Factor	0.96	0.96	0.96	0.96	0.96	0.96
Percent Heavy Veh, %	1	1	1	1	0	0
Cap, veh/h	253	225	185	674	1059	24
Arrive On Green	0.14	0.14	0.57	0.57	0.57	0.57
Sat Flow, veh/h	1795	1598	151	1178	1851	41
Grp Volume(v), veh/h	156	21	156	0	0	730
Grp Sat Flow(s),veh/h/ln	1795	1598	1329	0	0	1893
Q Serve(g_s), s	3.6	0.5	0.5	0.0	0.0	11.8
Cycle Q Clear(g_c), s	3.6	0.5	12.3	0.0	0.0	11.8
Prop In Lane	1.00	1.00	0.20			0.02
Lane Grp Cap(c), veh/h	253	225	858	0	0	1083
V/C Ratio(X)	0.62	0.09	0.18	0.00	0.00	0.67
Avail Cap(c_a), veh/h	1378	1226	858	0	0	1883
HCM Platoon Ratio	1.00	1.00	1.00	1.00	1.00	1.00
Upstream Filter(I)	1.00	1.00	1.00	0.00	0.00	1.00
Uniform Delay (d), s/veh	17.7	16.4	4.6	0.0	0.0	6.5
Incr Delay (d2), s/veh	2.4	0.2	0.2	0.0	0.0	1.6
Initial Q Delay(d3),s/veh	0.0	0.0	0.0	0.0	0.0	0.0
%ile BackOfQ(50%),veh/ln	1.5	0.2	0.4	0.0	0.0	3.2
Unsig. Movement Delay, s/veh						
LnGrp Delay(d),s/veh	20.2	16.6	4.8	0.0	0.0	8.1
LnGrp LOS	C	B	A	A	A	A
Approach Vol, veh/h	177			156	730	
Approach Delay, s/veh	19.7			4.8	8.1	
Approach LOS	B			A	A	

Timer - Assigned Phs		2		4		6
Phs Duration (G+Y+Rc), s		31.4		12.5		31.4
Change Period (Y+Rc), s		6.3		6.3		6.3
Max Green Setting (Gmax), s		23.7		33.7		43.7
Max Q Clear Time (g_c+I1), s		14.3		5.6		13.8
Green Ext Time (p_c), s		1.0		0.5		11.3

Intersection Summary	
HCM 6th Ctrl Delay	9.6
HCM 6th LOS	A

Movement	EBL	EBT	EBR	WBL	WBT	WBR	NBL	NBT	NBR	SBL	SBT	SBR
Lane Configurations												
Traffic Volume (veh/h)	85	5	20	10	5	5	35	507	5	5	1266	295
Future Volume (veh/h)	85	5	20	10	5	5	35	507	5	5	1266	295
Initial Q (Qb), veh	0	0	0	0	0	0	0	0	0	0	0	0
Ped-Bike Adj(A_pbT)	1.00		1.00	1.00		1.00	1.00		1.00	1.00		1.00
Parking Bus, Adj	1.00	1.00	1.00	1.00	1.00	1.00	1.00	1.00	1.00	1.00	1.00	1.00
Work Zone On Approach		No			No			No			No	
Adj Sat Flow, veh/h/ln	1885	1885	1885	1900	1900	1900	1826	1826	1826	1856	1856	1856
Adj Flow Rate, veh/h	90	5	21	11	5	5	37	539	5	5	1347	314
Peak Hour Factor	0.94	0.94	0.94	0.94	0.94	0.94	0.94	0.94	0.94	0.94	0.94	0.94
Percent Heavy Veh, %	1	1	1	0	0	0	5	5	5	3	3	3
Cap, veh/h	144	6	23	213	116	116	78	1314	12	580	1327	1125
Arrive On Green	0.09	0.09	0.09	0.01	0.13	0.13	0.02	0.73	0.73	0.00	0.72	0.72
Sat Flow, veh/h	1134	63	265	1810	872	872	1739	1806	17	1767	1856	1572
Grp Volume(v), veh/h	116	0	0	11	0	10	37	0	544	5	1347	314
Grp Sat Flow(s),veh/h/ln	1462	0	0	1810	0	1743	1739	0	1823	1767	1856	1572
Q Serve(g_s), s	11.3	0.0	0.0	0.8	0.0	0.7	0.8	0.0	16.7	0.1	102.9	10.2
Cycle Q Clear(g_c), s	11.3	0.0	0.0	0.8	0.0	0.7	0.8	0.0	16.7	0.1	102.9	10.2
Prop In Lane	0.78		0.18	1.00		0.50	1.00		0.01	1.00		1.00
Lane Grp Cap(c), veh/h	172	0	0	213	0	232	78	0	1326	580	1327	1125
V/C Ratio(X)	0.67	0.00	0.00	0.05	0.00	0.04	0.47	0.00	0.41	0.01	1.02	0.28
Avail Cap(c_a), veh/h	172	0	0	269	0	298	98	0	1326	622	1327	1125
HCM Platoon Ratio	1.00	1.00	1.00	1.00	1.00	1.00	1.00	1.00	1.00	1.00	1.00	1.00
Upstream Filter(I)	1.00	0.00	0.00	1.00	0.00	1.00	1.00	0.00	1.00	1.00	1.00	1.00
Uniform Delay (d), s/veh	65.1	0.0	0.0	57.5	0.0	54.4	42.1	0.0	7.6	6.5	20.5	7.3
Incr Delay (d2), s/veh	10.9	0.0	0.0	0.1	0.0	0.1	4.4	0.0	0.4	0.0	28.5	0.3
Initial Q Delay(d3),s/veh	0.0	0.0	0.0	0.0	0.0	0.0	0.0	0.0	0.0	0.0	0.0	0.0
%ile BackOfQ(50%),veh/ln	4.8	0.0	0.0	0.4	0.0	0.3	1.0	0.0	6.4	0.0	50.1	3.4
Unsig. Movement Delay, s/veh												
LnGrp Delay(d),s/veh	76.0	0.0	0.0	57.6	0.0	54.5	46.5	0.0	8.1	6.5	49.0	7.6
LnGrp LOS	E	A	A	E	A	D	D	A	A	A	F	A
Approach Vol, veh/h		116			21			581			1666	
Approach Delay, s/veh		76.0			56.1			10.5			41.1	
Approach LOS		E			E			B			D	

Timer - Assigned Phs	1	2	3	4	5	6		8
Phs Duration (G+Y+Rc), s	6.0	111.8	6.6	19.5	7.8	110.0		26.1
Change Period (Y+Rc), s	5.5	7.1	5.5	6.9	5.5	7.1		* 6.9
Max Green Setting (Gmax), s	4.0	102.9	5.5	12.6	4.0	102.9		* 25
Max Q Clear Time (g_c+I1), s	2.1	18.7	2.8	13.3	2.8	104.9		2.7
Green Ext Time (p_c), s	0.0	9.1	0.0	0.0	0.0	0.0		0.0

Intersection Summary	
HCM 6th Ctrl Delay	35.4
HCM 6th LOS	D

Notes

* HCM 6th computational engine requires equal clearance times for the phases crossing the barrier.

Intersection	
Int Delay, s/veh	1.3

Movement	EBL	EBT	WBT	WBR	SBL	SBR
Lane Configurations						
Traffic Vol, veh/h	34	375	60	9	9	34
Future Vol, veh/h	34	375	60	9	9	34
Conflicting Peds, #/hr	0	0	0	0	0	0
Sign Control	Free	Free	Free	Free	Stop	Stop
RT Channelized	-	None	-	None	-	None
Storage Length	450	-	-	-	0	-
Veh in Median Storage, #	-	0	0	-	0	-
Grade, %	-	0	0	-	0	-
Peak Hour Factor	88	88	88	88	88	88
Heavy Vehicles, %	2	2	2	2	49	49
Mvmt Flow	39	426	68	10	10	39

Major/Minor	Major1		Major2		Minor2	
Conflicting Flow All	78	0	-	0	577	73
Stage 1	-	-	-	-	73	-
Stage 2	-	-	-	-	504	-
Critical Hdwy	4.12	-	-	-	6.89	6.69
Critical Hdwy Stg 1	-	-	-	-	5.89	-
Critical Hdwy Stg 2	-	-	-	-	5.89	-
Follow-up Hdwy	2.218	-	-	-	3.941	3.741
Pot Cap-1 Maneuver	1520	-	-	-	408	873
Stage 1	-	-	-	-	843	-
Stage 2	-	-	-	-	521	-
Platoon blocked, %		-	-	-		
Mov Cap-1 Maneuver	1520	-	-	-	397	873
Mov Cap-2 Maneuver	-	-	-	-	397	-
Stage 1	-	-	-	-	821	-
Stage 2	-	-	-	-	521	-

Approach	EB	WB	SB
HCM Control Delay, s	0.6	0	10.5
HCM LOS			B

Minor Lane/Major Mvmt	EBL	EBT	WBT	WBR	SBLn1
Capacity (veh/h)	1520	-	-	-	698
HCM Lane V/C Ratio	0.025	-	-	-	0.07
HCM Control Delay (s)	7.4	-	-	-	10.5
HCM Lane LOS	A	-	-	-	B
HCM 95th %tile Q(veh)	0.1	-	-	-	0.2

Intersection	
Int Delay, s/veh	6.3

Movement	EBL	EBT	EBR	WBL	WBT	WBR	NBL	NBT	NBR	SBL	SBT	SBR
Lane Configurations												
Traffic Vol, veh/h	0	214	10	5	94	0	90	5	185	5	0	0
Future Vol, veh/h	0	214	10	5	94	0	90	5	185	5	0	0
Conflicting Peds, #/hr	0	0	0	0	0	0	0	0	0	0	0	0
Sign Control	Free	Free	Free	Free	Free	Free	Stop	Stop	Stop	Stop	Stop	Stop
RT Channelized	-	-	None	-	-	None	-	-	None	-	-	None
Storage Length	-	-	-	-	-	-	-	-	-	-	-	-
Veh in Median Storage, #	-	0	-	-	0	-	-	0	-	-	0	-
Grade, %	-	0	-	-	0	-	-	0	-	-	0	-
Peak Hour Factor	87	87	87	87	87	87	87	87	87	87	87	87
Heavy Vehicles, %	4	4	4	30	30	30	1	1	1	0	0	0
Mvmt Flow	0	246	11	6	108	0	103	6	213	6	0	0

Major/Minor	Major1			Major2			Minor1			Minor2		
Conflicting Flow All	108	0	0	257	0	0	372	372	129	246	377	108
Stage 1	-	-	-	-	-	-	252	252	-	120	120	-
Stage 2	-	-	-	-	-	-	120	120	-	126	257	-
Critical Hdwy	4.16	-	-	4.55	-	-	7.315	6.515	6.915	7.3	6.5	6.2
Critical Hdwy Stg 1	-	-	-	-	-	-	6.515	5.515	-	6.1	5.5	-
Critical Hdwy Stg 2	-	-	-	-	-	-	6.115	5.515	-	6.5	5.5	-
Follow-up Hdwy	2.238	-	-	2.485	-	-	3.5095	4.0095	3.3095	3.5	4	3.3
Pot Cap-1 Maneuver	1468	-	-	1143	-	-	574	559	900	702	558	951
Stage 1	-	-	-	-	-	-	733	700	-	889	800	-
Stage 2	-	-	-	-	-	-	887	798	-	870	699	-
Platoon blocked, %		-	-		-	-						
Mov Cap-1 Maneuver	1468	-	-	1143	-	-	571	556	900	529	555	951
Mov Cap-2 Maneuver	-	-	-	-	-	-	571	556	-	529	555	-
Stage 1	-	-	-	-	-	-	733	700	-	889	795	-
Stage 2	-	-	-	-	-	-	882	793	-	659	699	-

Approach	EB	WB	NB	SB
HCM Control Delay, s	0	0.4	13.3	11.9
HCM LOS			B	B

Minor Lane/Major Mvmt	NBLn1	EBL	EBT	EBR	WBL	WBT	WBR	SBLn1
Capacity (veh/h)	752	1468	-	-	1143	-	-	529
HCM Lane V/C Ratio	0.428	-	-	-	0.005	-	-	0.011
HCM Control Delay (s)	13.3	0	-	-	8.2	0	-	11.9
HCM Lane LOS	B	A	-	-	A	A	-	B
HCM 95th %tile Q(veh)	2.2	0	-	-	0	-	-	0

Movement	WBL	WBR	NBT	NBR	SBL	SBT
Lane Configurations						
Traffic Volume (veh/h)	29	150	951	188	56	321
Future Volume (veh/h)	29	150	951	188	56	321
Initial Q (Qb), veh	0	0	0	0	0	0
Ped-Bike Adj(A_pbT)	1.00	1.00		1.00	1.00	
Parking Bus, Adj	1.00	1.00	1.00	1.00	1.00	1.00
Work Zone On Approach	No		No			No
Adj Sat Flow, veh/h/ln	1618	1618	1856	1856	1826	1826
Adj Flow Rate, veh/h	31	161	1023	202	60	345
Peak Hour Factor	0.93	0.93	0.93	0.93	0.93	0.93
Percent Heavy Veh, %	19	19	3	3	5	5
Cap, veh/h	34	177	1008	199	110	1356
Arrive On Green	0.15	0.15	0.67	0.67	0.03	0.74
Sat Flow, veh/h	224	1166	1505	297	1739	1826
Grp Volume(v), veh/h	193	0	0	1225	60	345
Grp Sat Flow(s),veh/h/ln	1397	0	0	1802	1739	1826
Q Serve(g_s), s	18.6	0.0	0.0	91.5	1.4	8.2
Cycle Q Clear(g_c), s	18.6	0.0	0.0	91.5	1.4	8.2
Prop In Lane	0.16	0.83		0.16	1.00	
Lane Grp Cap(c), veh/h	212	0	0	1207	110	1356
V/C Ratio(X)	0.91	0.00	0.00	1.02	0.55	0.25
Avail Cap(c_a), veh/h	248	0	0	1207	120	1356
HCM Platoon Ratio	1.00	1.00	1.00	1.00	1.00	1.00
Upstream Filter(I)	1.00	0.00	0.00	1.00	1.00	1.00
Uniform Delay (d), s/veh	57.0	0.0	0.0	22.6	37.7	5.6
Incr Delay (d2), s/veh	31.2	0.0	0.0	29.7	5.9	0.1
Initial Q Delay(d3),s/veh	0.0	0.0	0.0	0.0	0.0	0.0
%ile BackOfQ(50%),veh/ln	8.4	0.0	0.0	45.3	1.6	3.0
Unsig. Movement Delay, s/veh						
LnGrp Delay(d),s/veh	88.3	0.0	0.0	52.3	43.6	5.7
LnGrp LOS	F	A	A	F	D	A
Approach Vol, veh/h	193		1225			405
Approach Delay, s/veh	88.3		52.3			11.3
Approach LOS	F		D			B

Timer - Assigned Phs	1	2				6	8
Phs Duration (G+Y+Rc), s	10.0	99.6				109.6	27.1
Change Period (Y+Rc), s	5.5	* 8.1				* 8.1	6.3
Max Green Setting (Gmax), s	5.3	* 92				* 1E2	24.3
Max Q Clear Time (g_c+I1), s	3.4	93.5				10.2	20.6
Green Ext Time (p_c), s	0.0	0.0				3.5	0.2

Intersection Summary	
HCM 6th Ctrl Delay	47.0
HCM 6th LOS	D

Notes

User approved pedestrian interval to be less than phase max green.

User approved volume balancing among the lanes for turning movement.

* HCM 6th computational engine requires equal clearance times for the phases crossing the barrier.

Movement	EBL	EBR	NBL	NBT	SBT	SBR
Lane Configurations						
Traffic Volume (vph)	75	55	80	1304	159	45
Future Volume (vph)	75	55	80	1304	159	45
Ideal Flow (vphpl)	1900	1900	1900	1900	1900	1900
Total Lost time (s)	5.0	5.0	6.5	6.5	6.5	6.5
Lane Util. Factor	1.00	1.00	1.00	1.00	1.00	1.00
Frt	1.00	0.85	1.00	1.00	1.00	0.85
Flt Protected	0.95	1.00	0.95	1.00	1.00	1.00
Satd. Flow (prot)	1641	1468	1752	1845	1743	1482
Flt Permitted	0.95	1.00	0.56	1.00	1.00	1.00
Satd. Flow (perm)	1641	1468	1040	1845	1743	1482
Peak-hour factor, PHF	0.92	0.92	0.92	0.92	0.92	0.92
Adj. Flow (vph)	82	60	87	1417	173	49
RTOR Reduction (vph)	0	54	0	0	0	20
Lane Group Flow (vph)	82	6	87	1417	173	29
Heavy Vehicles (%)	10%	10%	3%	3%	9%	9%
Turn Type	custom	custom	pm+pt	NA	NA	Perm
Protected Phases	3	3	5	2	6	
Permitted Phases	4	4	2			6
Actuated Green, G (s)	6.7	6.7	54.4	54.4	43.4	43.4
Effective Green, g (s)	6.7	6.7	54.4	54.4	43.4	43.4
Actuated g/C Ratio	0.09	0.09	0.75	0.75	0.60	0.60
Clearance Time (s)	5.0	5.0	6.5	6.5	6.5	6.5
Vehicle Extension (s)	2.0	2.0	2.0	5.0	5.0	5.0
Lane Grp Cap (vph)	151	135	823	1382	1041	885
v/s Ratio Prot	c0.05	0.00	0.01	c0.77	0.10	
v/s Ratio Perm			0.07			0.02
v/c Ratio	0.54	0.04	0.11	1.03	0.17	0.03
Uniform Delay, d1	31.5	30.0	2.7	9.1	6.5	6.0
Progression Factor	1.00	1.00	1.00	1.00	1.00	1.00
Incremental Delay, d2	2.1	0.0	0.0	30.9	0.2	0.0
Delay (s)	33.6	30.1	2.7	40.0	6.7	6.0
Level of Service	C	C	A	D	A	A
Approach Delay (s)	32.1			37.8	6.5	
Approach LOS	C			D	A	

Intersection Summary			
HCM 2000 Control Delay	33.7	HCM 2000 Level of Service	C
HCM 2000 Volume to Capacity ratio	1.15		
Actuated Cycle Length (s)	72.6	Sum of lost time (s)	21.0
Intersection Capacity Utilization	82.4%	ICU Level of Service	E
Analysis Period (min)	15		
c Critical Lane Group			

Movement	EBL	EBR	NBL	NBT	SBT	SBR
Lane Configurations						
Traffic Volume (vph)	314	5	20	1020	130	44
Future Volume (vph)	314	5	20	1020	130	44
Ideal Flow (vphpl)	1900	1900	1900	1900	1900	1900
Total Lost time (s)	5.0	5.0	6.0	6.0	6.0	5.0
Lane Util. Factor	1.00	1.00	1.00	1.00	1.00	1.00
Frt	1.00	0.85	1.00	1.00	1.00	0.85
Flt Protected	0.95	1.00	0.95	1.00	1.00	1.00
Satd. Flow (prot)	1770	1583	1752	1845	1810	1538
Flt Permitted	0.95	1.00	0.63	1.00	1.00	1.00
Satd. Flow (perm)	1770	1583	1169	1845	1810	1538
Peak-hour factor, PHF	0.91	0.91	0.91	0.91	0.91	0.91
Adj. Flow (vph)	345	5	22	1121	143	48
RTOR Reduction (vph)	0	4	0	0	0	5
Lane Group Flow (vph)	345	1	22	1121	143	43
Heavy Vehicles (%)	2%	2%	3%	3%	5%	5%
Turn Type	custom	custom	pm+pt	NA	NA	pm+ov
Protected Phases	3	3	5	2	6	3
Permitted Phases	4	4	2			6
Actuated Green, G (s)	40.6	40.6	128.4	128.4	119.0	159.6
Effective Green, g (s)	40.6	40.6	128.4	128.4	119.0	159.6
Actuated g/C Ratio	0.23	0.23	0.71	0.71	0.66	0.89
Clearance Time (s)	5.0	5.0	6.0	6.0	6.0	5.0
Vehicle Extension (s)	2.0	2.0	2.0	2.0	2.0	2.0
Lane Grp Cap (vph)	399	357	844	1316	1196	1363
v/s Ratio Prot	c0.19	0.00	0.00	c0.61	0.08	0.01
v/s Ratio Perm			0.02			0.02
v/c Ratio	0.86	0.00	0.03	0.85	0.12	0.03
Uniform Delay, d1	67.1	54.0	7.6	18.8	11.2	1.2
Progression Factor	1.00	1.00	1.00	1.00	1.00	1.00
Incremental Delay, d2	16.9	0.0	0.0	7.1	0.2	0.0
Delay (s)	83.9	54.0	7.6	26.0	11.4	1.2
Level of Service	F	D	A	C	B	A
Approach Delay (s)	83.5			25.6	8.9	
Approach LOS	F			C	A	

Intersection Summary			
HCM 2000 Control Delay	35.7	HCM 2000 Level of Service	D
HCM 2000 Volume to Capacity ratio	0.90		
Actuated Cycle Length (s)	180.0	Sum of lost time (s)	20.0
Intersection Capacity Utilization	80.2%	ICU Level of Service	D
Analysis Period (min)	15		
c Critical Lane Group			

Intersection	
Int Delay, s/veh	0.7

Movement	EBL	EBT	EBR	WBL	WBT	WBR	NBL	NBT	NBR	SBL	SBT	SBR
Lane Configurations												
Traffic Vol, veh/h	0	0	0	15	0	10	10	950	0	0	45	90
Future Vol, veh/h	0	0	0	15	0	10	10	950	0	0	45	90
Conflicting Peds, #/hr	0	0	0	0	0	0	0	0	0	0	0	0
Sign Control	Stop	Stop	Stop	Stop	Stop	Stop	Free	Free	Free	Free	Free	Free
RT Channelized	-	-	None	-	-	None	-	-	None	-	-	None
Storage Length	-	-	-	-	-	500	175	-	-	-	-	375
Veh in Median Storage, #	-	1	-	-	0	-	-	0	-	-	0	-
Grade, %	-	0	-	-	0	-	-	0	-	-	0	-
Peak Hour Factor	83	83	83	83	83	83	83	83	83	83	83	83
Heavy Vehicles, %	0	0	0	19	19	19	3	3	3	4	4	4
Mvmt Flow	0	0	0	18	0	12	12	1145	0	0	54	108

Major/Minor	Minor1		Major1			Major2			
Conflicting Flow All	1277	1331	1145	162	0	-	-	-	0
Stage 1	1169	1169	-	-	-	-	-	-	-
Stage 2	108	162	-	-	-	-	-	-	-
Critical Hdwy	6.59	6.69	6.39	4.13	-	-	-	-	-
Critical Hdwy Stg 1	5.59	5.69	-	-	-	-	-	-	-
Critical Hdwy Stg 2	5.59	5.69	-	-	-	-	-	-	-
Follow-up Hdwy	3.671	4.171	3.471	2.227	-	-	-	-	-
Pot Cap-1 Maneuver	169	143	224	1411	-	0	0	-	-
Stage 1	273	248	-	-	-	0	0	-	-
Stage 2	876	733	-	-	-	0	0	-	-
Platoon blocked, %					-			-	-
Mov Cap-1 Maneuver	167	0	224	1411	-	-	-	-	-
Mov Cap-2 Maneuver	167	0	-	-	-	-	-	-	-
Stage 1	271	0	-	-	-	-	-	-	-
Stage 2	876	0	-	-	-	-	-	-	-

Approach	WB	NB	SB
HCM Control Delay, s	26.3	0.1	0
HCM LOS	D		

Minor Lane/Major Mvmt	NBL	NBT	WBLn1	WBLn2	SBT	SBR
Capacity (veh/h)	1411	-	167	224	-	-
HCM Lane V/C Ratio	0.009	-	0.108	0.054	-	-
HCM Control Delay (s)	7.6	-	29.2	22	-	-
HCM Lane LOS	A	-	D	C	-	-
HCM 95th %tile Q(veh)	0	-	0.4	0.2	-	-

Movement	EBL	EBR	NBL	NBT	SBT	SBR
Lane Configurations						
Traffic Volume (veh/h)	605	10	80	345	60	5
Future Volume (veh/h)	605	10	80	345	60	5
Initial Q (Qb), veh	0	0	0	0	0	0
Ped-Bike Adj(A_pbT)	1.00	1.00	1.00			1.00
Parking Bus, Adj	1.00	1.00	1.00	1.00	1.00	1.00
Work Zone On Approach	No			No	No	
Adj Sat Flow, veh/h/ln	1856	1856	1870	1870	1811	1811
Adj Flow Rate, veh/h	738	12	98	421	73	6
Peak Hour Factor	0.82	0.82	0.82	0.82	0.82	0.82
Percent Heavy Veh, %	3	3	2	2	6	6
Cap, veh/h	800	712	158	571	632	52
Arrive On Green	0.45	0.45	0.38	0.38	0.38	0.38
Sat Flow, veh/h	1767	1572	266	1493	1651	136
Grp Volume(v), veh/h	738	12	519	0	0	79
Grp Sat Flow(s),veh/h/ln	1767	1572	1759	0	0	1787
Q Serve(g_s), s	30.0	0.3	14.1	0.0	0.0	2.2
Cycle Q Clear(g_c), s	30.0	0.3	19.6	0.0	0.0	2.2
Prop In Lane	1.00	1.00	0.19			0.08
Lane Grp Cap(c), veh/h	800	712	729	0	0	684
V/C Ratio(X)	0.92	0.02	0.71	0.00	0.00	0.12
Avail Cap(c_a), veh/h	1125	1001	1396	0	0	787
HCM Platoon Ratio	1.00	1.00	1.00	1.00	1.00	1.00
Upstream Filter(I)	1.00	1.00	1.00	0.00	0.00	1.00
Uniform Delay (d), s/veh	19.7	11.5	20.5	0.0	0.0	15.3
Incr Delay (d2), s/veh	9.7	0.0	2.8	0.0	0.0	0.2
Initial Q Delay(d3),s/veh	0.0	0.0	0.0	0.0	0.0	0.0
%ile BackOfQ(50%),veh/ln	13.2	0.1	8.1	0.0	0.0	0.9
Unsig. Movement Delay, s/veh						
LnGrp Delay(d),s/veh	29.3	11.6	23.3	0.0	0.0	15.4
LnGrp LOS	C	B	C	A	A	B
Approach Vol, veh/h	750			519	79	
Approach Delay, s/veh	29.1			23.3	15.4	
Approach LOS	C			C	B	

Timer - Assigned Phs		2		4		6
Phs Duration (G+Y+Rc), s		35.6		40.9		35.6
Change Period (Y+Rc), s		6.3		6.3		6.3
Max Green Setting (Gmax), s		58.7		48.7		33.7
Max Q Clear Time (g_c+I1), s		21.6		32.0		4.2
Green Ext Time (p_c), s		7.7		2.6		0.7

Intersection Summary	
HCM 6th Ctrl Delay	26.0
HCM 6th LOS	C

Movement	EBL	EBT	EBR	WBL	WBT	WBR	NBL	NBT	NBR	SBL	SBT	SBR
Lane Configurations												
Traffic Volume (veh/h)	160	10	20	5	0	5	5	1081	0	5	372	65
Future Volume (veh/h)	160	10	20	5	0	5	5	1081	0	5	372	65
Initial Q (Qb), veh	0	0	0	0	0	0	0	0	0	0	0	0
Ped-Bike Adj(A_pbT)	1.00		0.98	1.00		1.00	1.00		1.00	1.00		1.00
Parking Bus, Adj	1.00	1.00	1.00	1.00	1.00	1.00	1.00	1.00	1.00	1.00	1.00	1.00
Work Zone On Approach		No			No			No			No	
Adj Sat Flow, veh/h/ln	1885	1885	1885	1693	1693	1693	1752	1752	1752	1648	1648	1648
Adj Flow Rate, veh/h	174	11	22	5	0	5	5	1175	0	5	404	71
Peak Hour Factor	0.92	0.92	0.92	0.92	0.92	0.92	0.92	0.92	0.92	0.92	0.92	0.92
Percent Heavy Veh, %	1	1	1	14	14	14	10	10	10	17	17	17
Cap, veh/h	211	10	21	268	0	253	553	1191	0	69	1120	949
Arrive On Green	0.13	0.13	0.13	0.00	0.00	0.18	0.00	0.68	0.00	0.00	0.68	0.68
Sat Flow, veh/h	1223	77	155	1612	0	1434	1668	1752	0	1570	1648	1397
Grp Volume(v), veh/h	207	0	0	5	0	5	5	1175	0	5	404	71
Grp Sat Flow(s),veh/h/ln	1455	0	0	1612	0	1434	1668	1752	0	1570	1648	1397
Q Serve(g_s), s	18.6	0.0	0.0	0.4	0.0	0.4	0.1	91.0	0.0	0.1	14.5	2.4
Cycle Q Clear(g_c), s	18.6	0.0	0.0	0.4	0.0	0.4	0.1	91.0	0.0	0.1	14.5	2.4
Prop In Lane	0.84		0.11	1.00		1.00	1.00		0.00	1.00		1.00
Lane Grp Cap(c), veh/h	242	0	0	268	0	253	553	1191	0	69	1120	949
V/C Ratio(X)	0.86	0.00	0.00	0.02	0.00	0.02	0.01	0.99	0.00	0.07	0.36	0.07
Avail Cap(c_a), veh/h	242	0	0	349	0	335	595	1193	0	108	1122	951
HCM Platoon Ratio	1.00	1.00	1.00	1.00	1.00	1.00	1.00	1.00	1.00	1.00	1.00	1.00
Upstream Filter(I)	1.00	0.00	0.00	1.00	0.00	1.00	1.00	1.00	0.00	1.00	1.00	1.00
Uniform Delay (d), s/veh	61.0	0.0	0.0	50.3	0.0	47.4	7.8	21.7	0.0	37.0	9.5	7.5
Incr Delay (d2), s/veh	25.5	0.0	0.0	0.0	0.0	0.0	0.0	22.9	0.0	0.4	0.4	0.1
Initial Q Delay(d3),s/veh	0.0	0.0	0.0	0.0	0.0	0.0	0.0	0.0	0.0	0.0	0.0	0.0
%ile BackOfQ(50%),veh/ln	9.1	0.0	0.0	0.2	0.0	0.1	0.0	41.6	0.0	0.1	5.2	0.7
Unsig. Movement Delay, s/veh												
LnGrp Delay(d),s/veh	86.5	0.0	0.0	50.4	0.0	47.5	7.8	44.7	0.0	37.5	9.9	7.6
LnGrp LOS	F	A	A	D	A	D	A	D	A	D	A	A
Approach Vol, veh/h		207			10			1180			480	
Approach Delay, s/veh		86.5			48.9			44.5			9.8	
Approach LOS		F			D			D			A	

Timer - Assigned Phs	1	2	3	4	5	6		8
Phs Duration (G+Y+Rc), s	6.0	101.8	6.0	25.5	6.0	101.8		31.5
Change Period (Y+Rc), s	5.5	7.1	5.5	6.9	5.5	7.1		* 6.9
Max Green Setting (Gmax), s	4.0	94.9	7.5	18.6	4.0	94.9		* 33
Max Q Clear Time (g_c+I1), s	2.1	93.0	2.4	20.6	2.1	16.5		2.4
Green Ext Time (p_c), s	0.0	1.8	0.0	0.0	0.0	6.8		0.0

Intersection Summary	
HCM 6th Ctrl Delay	40.3
HCM 6th LOS	D

Notes

* HCM 6th computational engine requires equal clearance times for the phases crossing the barrier.

Movement	EBL	EBT	EBR	WBL	WBT	WBR	NBL	NBT	NBR	SBL	SBT	SBR
Lane Configurations												
Traffic Volume (vph)	620	322	85	5	991	545	105	100	10	100	25	275
Future Volume (vph)	620	322	85	5	991	545	105	100	10	100	25	275
Ideal Flow (vphpl)	1900	1900	1900	1900	1900	1900	1900	1900	1900	1900	1900	1900
Total Lost time (s)	6.4	6.4	6.4	6.4	6.4	6.4	5.0	5.0		5.0	5.0	5.0
Lane Util. Factor	1.00	0.95	1.00	1.00	0.95	1.00	1.00	1.00		1.00	1.00	1.00
Frpb, ped/bikes	1.00	1.00	1.00	1.00	1.00	1.00	1.00	1.00		1.00	1.00	0.98
Flpb, ped/bikes	1.00	1.00	1.00	1.00	1.00	1.00	0.99	1.00		1.00	1.00	1.00
Frt	1.00	1.00	0.85	1.00	1.00	0.85	1.00	0.99		1.00	1.00	0.85
Flt Protected	0.95	1.00	1.00	0.95	1.00	1.00	0.95	1.00		0.95	1.00	1.00
Satd. Flow (prot)	1687	3374	1509	1687	3374	1509	1774	1854		1736	1827	1517
Flt Permitted	0.95	1.00	1.00	0.95	1.00	1.00	0.70	1.00		0.54	1.00	1.00
Satd. Flow (perm)	1687	3374	1509	1687	3374	1509	1303	1854		985	1827	1517
Peak-hour factor, PHF	0.95	0.95	0.95	0.95	0.95	0.95	0.95	0.95	0.95	0.95	0.95	0.95
Adj. Flow (vph)	653	339	89	5	1043	574	111	105	11	105	26	289
RTOR Reduction (vph)	0	0	27	0	0	237	0	3	0	0	0	258
Lane Group Flow (vph)	653	339	62	5	1043	337	111	113	0	105	26	31
Confl. Peds. (#/hr)							9					9
Heavy Vehicles (%)	7%	7%	7%	7%	7%	7%	1%	1%	1%	4%	4%	4%
Turn Type	Prot	NA	Perm	Prot	NA	Perm	pm+pt	NA		pm+pt	NA	Perm
Protected Phases	5 15	2		1	6		3	8		7	4	
Permitted Phases			2			6	8			4		4
Actuated Green, G (s)	51.8	106.7	106.7	1.3	49.8	49.8	24.3	17.3		22.3	16.3	16.3
Effective Green, g (s)	51.8	106.7	106.7	1.3	49.8	49.8	24.3	17.3		22.3	16.3	16.3
Actuated g/C Ratio	0.34	0.69	0.69	0.01	0.32	0.32	0.16	0.11		0.14	0.11	0.11
Clearance Time (s)		6.4	6.4	6.4	6.4	6.4	5.0	5.0		5.0	5.0	5.0
Vehicle Extension (s)		5.0	5.0	3.0	5.0	5.0	3.0	3.0		3.0	3.0	3.0
Lane Grp Cap (vph)	567	2336	1044	14	1090	487	226	208		171	193	160
v/s Ratio Prot	c0.39	0.10		0.00	c0.31		0.02	0.06		c0.02	0.01	
v/s Ratio Perm			0.04			0.22	0.05			c0.06		0.02
v/c Ratio	1.15	0.15	0.06	0.36	0.96	0.69	0.49	0.54		0.61	0.13	0.19
Uniform Delay, d1	51.1	8.1	7.6	76.0	51.1	45.5	58.5	64.7		61.1	62.5	62.9
Progression Factor	1.00	1.00	1.00	1.00	1.00	1.00	1.00	1.00		1.00	1.00	1.00
Incremental Delay, d2	87.1	0.1	0.0	14.9	18.0	5.3	1.7	2.9		6.4	0.3	0.6
Delay (s)	138.3	8.2	7.7	90.9	69.1	50.8	60.2	67.6		67.5	62.8	63.5
Level of Service	F	A	A	F	E	D	E	E		E	E	E
Approach Delay (s)		86.7			62.7			64.0			64.4	
Approach LOS		F			E			E			E	

Intersection Summary			
HCM 2000 Control Delay	70.8	HCM 2000 Level of Service	E
HCM 2000 Volume to Capacity ratio	0.97		
Actuated Cycle Length (s)	154.1	Sum of lost time (s)	29.2
Intersection Capacity Utilization	93.6%	ICU Level of Service	F
Analysis Period (min)	15		

c Critical Lane Group

Movement	EBT	EBR	WBL	WBT	NBL	NBR
Lane Configurations						
Traffic Volume (veh/h)	392	221	330	1036	1011	630
Future Volume (veh/h)	392	221	330	1036	1011	630
Initial Q (Qb), veh	0	0	0	0	0	0
Ped-Bike Adj(A_pbT)		1.00	1.00		1.00	1.00
Parking Bus, Adj	1.00	1.00	1.00	1.00	1.00	1.00
Work Zone On Approach	No			No	No	
Adj Sat Flow, veh/h/ln	1678	1678	1781	1781	1885	1885
Adj Flow Rate, veh/h	426	0	359	1126	1099	685
Peak Hour Factor	0.92	0.92	0.92	0.92	0.92	0.92
Percent Heavy Veh, %	15	15	8	8	1	1
Cap, veh/h	1129		381	1760	1358	623
Arrive On Green	0.25	0.00	0.22	0.52	0.39	0.39
Sat Flow, veh/h	4731	1422	1697	3474	3483	1598
Grp Volume(v), veh/h	426	0	359	1126	1099	685
Grp Sat Flow(s),veh/h/ln	1527	1422	1697	1692	1742	1598
Q Serve(g_s), s	10.0	0.0	27.1	31.1	36.6	50.7
Cycle Q Clear(g_c), s	10.0	0.0	27.1	31.1	36.6	50.7
Prop In Lane		1.00	1.00		1.00	1.00
Lane Grp Cap(c), veh/h	1129		381	1760	1358	623
V/C Ratio(X)	0.38		0.94	0.64	0.81	1.10
Avail Cap(c_a), veh/h	1129		386	1760	1358	623
HCM Platoon Ratio	1.00	1.00	1.00	1.00	1.00	1.00
Upstream Filter(I)	1.00	0.00	0.81	0.81	1.00	1.00
Uniform Delay (d), s/veh	40.7	0.0	49.6	22.4	35.3	39.7
Incr Delay (d2), s/veh	1.0	0.0	27.5	1.5	5.3	66.3
Initial Q Delay(d3),s/veh	0.0	0.0	0.0	0.0	0.0	0.0
%ile BackOfQ(50%),veh/ln	3.9	0.0	14.3	12.5	16.4	31.0
Unsig. Movement Delay, s/veh						
LnGrp Delay(d),s/veh	41.7	0.0	77.1	23.9	40.6	105.9
LnGrp LOS	D		E	C	D	F
Approach Vol, veh/h	426	A		1485	1784	
Approach Delay, s/veh	41.7			36.8	65.7	
Approach LOS	D			D	E	

Timer - Assigned Phs	1	2				6	8
Phs Duration (G+Y+Rc), s	35.6	38.4				74.0	56.0
Change Period (Y+Rc), s	6.4	6.4				6.4	5.3
Max Green Setting (Gmax), s	29.6	31.6				67.6	50.7
Max Q Clear Time (g_c+I1), s	29.1	12.0				33.1	52.7
Green Ext Time (p_c), s	0.1	4.8				18.7	0.0

Intersection Summary	
HCM 6th Ctrl Delay	51.3
HCM 6th LOS	D

Notes

Unsignalized Delay for [EBR] is excluded from calculations of the approach delay and intersection delay.

Movement	EBL	EBT	EBR	WBL	WBT	WBR	NBL	NBT	NBR	SBL	SBT	SBR
Lane Configurations												
Traffic Volume (vph)	25	537	0	0	1830	521	0	0	385	0	0	673
Future Volume (vph)	25	537	0	0	1830	521	0	0	385	0	0	673
Ideal Flow (vphpl)	1900	1900	1900	1900	1900	1900	1900	1900	1900	1900	1900	1900
Total Lost time (s)	5.0	5.0			5.0	5.0			4.0			5.0
Lane Util. Factor	1.00	0.95			0.91	1.00			1.00			1.00
Frt	1.00	1.00			1.00	0.85			0.86			0.86
Flt Protected	0.95	1.00			1.00	1.00			1.00			1.00
Satd. Flow (prot)	1556	3112			4988	1553			1405			1522
Flt Permitted	0.95	1.00			1.00	1.00			1.00			1.00
Satd. Flow (perm)	1556	3112			4988	1553			1405			1522
Peak-hour factor, PHF	0.98	0.98	0.98	0.98	0.98	0.98	0.98	0.98	0.98	0.98	0.98	0.98
Adj. Flow (vph)	26	548	0	0	1867	532	0	0	393	0	0	687
RTOR Reduction (vph)	0	0	0	0	0	190	0	0	0	0	0	68
Lane Group Flow (vph)	26	548	0	0	1867	342	0	0	393	0	0	619
Heavy Vehicles (%)	16%	16%	16%	4%	4%	4%	17%	17%	17%	8%	8%	8%
Turn Type	Prot	NA			NA	custom			Free			pt+ov
Protected Phases	1	1 6 8			6	4 5 13						1 8
Permitted Phases						6			Free			8 1
Actuated Green, G (s)	24.3	96.0			57.0	70.7			110.0			34.0
Effective Green, g (s)	24.3	96.0			57.0	70.7			110.0			34.0
Actuated g/C Ratio	0.22	0.87			0.52	0.64			1.00			0.31
Clearance Time (s)	5.0				5.0							
Vehicle Extension (s)	2.0				2.0							
Lane Grp Cap (vph)	343	2715			2584	1068			1405			470
v/s Ratio Prot	0.02	0.18			c0.37	0.12						c0.41
v/s Ratio Perm						0.10			c0.28			
v/c Ratio	0.08	0.20			0.72	0.32			0.28			1.32
Uniform Delay, d1	34.0	1.1			20.4	8.8			0.0			38.0
Progression Factor	0.86	0.64			1.00	1.00			1.00			1.00
Incremental Delay, d2	0.0	0.0			1.8	0.1			0.5			156.7
Delay (s)	29.3	0.7			22.2	8.9			0.5			194.7
Level of Service	C	A			C	A			A			F
Approach Delay (s)		2.0			19.2			0.5			194.7	
Approach LOS		A			B			A			F	

Intersection Summary			
HCM 2000 Control Delay	44.7	HCM 2000 Level of Service	D
HCM 2000 Volume to Capacity ratio	0.98		
Actuated Cycle Length (s)	110.0	Sum of lost time (s)	20.0
Intersection Capacity Utilization	85.4%	ICU Level of Service	E
Analysis Period (min)	15		
c Critical Lane Group			

Movement	EBL	EBT	EBR	WBL	WBT	WBR	NBL	NBT	NBR	SBL	SBT	SBR
Lane Configurations												
Traffic Volume (vph)	445	195	80	710	555	1239	0	0	0	372	933	515
Future Volume (vph)	445	195	80	710	555	1239	0	0	0	372	933	515
Ideal Flow (vphpl)	1900	1900	1900	1900	1900	1900	1900	1900	1900	1900	1900	1900
Total Lost time (s)	5.0	5.0		5.0	5.0	4.0				5.0	5.0	5.0
Lane Util. Factor	0.97	0.95		1.00	0.95	1.00				0.97	0.95	0.95
Frpb, ped/bikes	1.00	0.99		1.00	1.00	1.00				1.00	1.00	1.00
Flpb, ped/bikes	1.00	1.00		1.00	1.00	1.00				1.00	1.00	1.00
Frt	1.00	0.96		1.00	1.00	0.85				1.00	1.00	0.85
Flt Protected	0.95	1.00		0.95	1.00	1.00				0.95	1.00	1.00
Satd. Flow (prot)	3335	3261		1719	3438	1538				3335	1719	1461
Flt Permitted	0.95	1.00		0.95	1.00	1.00				0.95	1.00	1.00
Satd. Flow (perm)	3335	3261		1719	3438	1538				3335	1719	1461
Peak-hour factor, PHF	0.97	0.97	0.97	0.97	0.97	0.97	0.97	0.97	0.97	0.97	0.97	0.97
Adj. Flow (vph)	459	201	82	732	572	1277	0	0	0	384	962	531
RTOR Reduction (vph)	0	40	0	0	0	4	0	0	0	0	0	0
Lane Group Flow (vph)	459	243	0	732	572	1273	0	0	0	384	962	531
Confl. Peds. (#/hr)			2	2								
Heavy Vehicles (%)	5%	5%	5%	5%	5%	5%	0%	0%	0%	5%	5%	5%
Turn Type	Split	NA		Split	NA	custom				Split	NA	custom
Protected Phases	2	2		3	3	7				4	4	4 5
Permitted Phases						7						
Actuated Green, G (s)	12.0	12.0		38.0	38.0	89.0				45.0	45.0	62.0
Effective Green, g (s)	12.0	12.0		38.0	38.0	89.0				45.0	45.0	62.0
Actuated g/C Ratio	0.11	0.11		0.35	0.35	0.81				0.41	0.41	0.56
Clearance Time (s)	5.0	5.0		5.0	5.0	4.0				5.0	5.0	
Vehicle Extension (s)	3.0	3.0		3.0	3.0	3.0				3.0	3.0	
Lane Grp Cap (vph)	363	355		593	1187	1244				1364	703	823
v/s Ratio Prot	c0.14	0.07		c0.43	0.17	0.83				0.12	c0.56	0.36
v/s Ratio Perm												
v/c Ratio	1.26	0.68		1.23	0.48	1.02				0.28	1.37	0.65
Uniform Delay, d1	49.0	47.2		36.0	28.3	10.5				21.7	32.5	16.5
Progression Factor	1.00	1.00		0.70	0.64	1.46				1.00	1.00	1.00
Incremental Delay, d2	139.3	5.4		114.0	0.8	25.6				0.1	174.8	1.7
Delay (s)	188.3	52.6		139.3	18.9	40.9				21.8	207.3	18.2
Level of Service	F	D		F	B	D				C	F	B
Approach Delay (s)		136.5			64.0			0.0			115.9	
Approach LOS		F			E			A			F	

Intersection Summary			
HCM 2000 Control Delay	93.0	HCM 2000 Level of Service	F
HCM 2000 Volume to Capacity ratio	1.30		
Actuated Cycle Length (s)	110.0	Sum of lost time (s)	15.0
Intersection Capacity Utilization	119.5%	ICU Level of Service	H
Analysis Period (min)	15		

c Critical Lane Group

Movement	EBL	EBT	EBR	WBL	WBT	WBR	NBL	NBT	NBR	SBL	SBT	SBR
Lane Configurations												
Traffic Volume (veh/h)	490	450	125	849	590	176	120	855	714	91	846	180
Future Volume (veh/h)	490	450	125	849	590	176	120	855	714	91	846	180
Initial Q (Qb), veh	0	0	0	0	0	0	0	0	0	0	0	0
Ped-Bike Adj(A_pbT)	1.00		1.00	1.00		1.00	1.00		1.00	1.00		1.00
Parking Bus, Adj	1.00	1.00	1.00	1.00	1.00	1.00	1.00	1.00	1.00	1.00	1.00	1.00
Work Zone On Approach		No			No			No			No	
Adj Sat Flow, veh/h/ln	1841	1841	1841	1856	1856	1856	1826	1826	1826	1811	1811	1811
Adj Flow Rate, veh/h	541	414	0	875	608	0	124	881	0	94	872	0
Peak Hour Factor	0.97	0.97	0.97	0.97	0.97	0.97	0.97	0.97	0.97	0.97	0.97	0.97
Percent Heavy Veh, %	4	4	4	3	3	3	5	5	5	6	6	6
Cap, veh/h	755	396		1278	671		149	997		119	945	
Arrive On Green	0.22	0.22	0.00	0.36	0.36	0.00	0.09	0.20	0.00	0.07	0.19	0.00
Sat Flow, veh/h	3506	1841	1560	3534	1856	1572	1739	4985	1547	1725	4944	1535
Grp Volume(v), veh/h	541	414	0	875	608	0	124	881	0	94	872	0
Grp Sat Flow(s),veh/h/ln	1753	1841	1560	1767	1856	1572	1739	1662	1547	1725	1648	1535
Q Serve(g_s), s	18.6	28.0	0.0	27.3	40.5	0.0	9.1	22.3	0.0	7.0	22.5	0.0
Cycle Q Clear(g_c), s	18.6	28.0	0.0	27.3	40.5	0.0	9.1	22.3	0.0	7.0	22.5	0.0
Prop In Lane	1.00		1.00	1.00		1.00	1.00		1.00	1.00		1.00
Lane Grp Cap(c), veh/h	755	396		1278	671		149	997		119	945	
V/C Ratio(X)	0.72	1.04		0.68	0.91		0.83	0.88		0.79	0.92	
Avail Cap(c_a), veh/h	755	396		1278	671		227	997		133	945	
HCM Platoon Ratio	1.00	1.00	1.00	1.00	1.00	1.00	1.00	1.00	1.00	1.00	1.00	1.00
Upstream Filter(I)	1.00	1.00	0.00	0.68	0.68	0.00	0.09	0.09	0.00	1.00	1.00	0.00
Uniform Delay (d), s/veh	47.3	51.0	0.0	35.2	39.4	0.0	58.5	50.5	0.0	59.6	51.6	0.0
Incr Delay (d2), s/veh	5.8	57.2	0.0	2.1	13.4	0.0	1.5	1.2	0.0	26.1	15.7	0.0
Initial Q Delay(d3),s/veh	0.0	0.0	0.0	0.0	0.0	0.0	0.0	0.0	0.0	0.0	0.0	0.0
%ile BackOfQ(50%),veh/ln	8.7	19.0	0.0	12.0	20.5	0.0	4.1	9.4	0.0	3.9	10.7	0.0
Unsig. Movement Delay, s/veh												
LnGrp Delay(d),s/veh	53.1	108.2	0.0	37.3	52.8	0.0	60.0	51.7	0.0	85.7	67.3	0.0
LnGrp LOS	D	F		D	D		E	D		F	E	
Approach Vol, veh/h		955	A		1483	A		1005	A		966	A
Approach Delay, s/veh		77.0			43.6			52.8			69.1	
Approach LOS		E			D			D			E	

Timer - Assigned Phs		2	3	4		6	7	8				
Phs Duration (G+Y+Rc), s		52.0	15.2	29.8		33.0	14.0	31.0				
Change Period (Y+Rc), s		5.0	4.0	5.0		5.0	5.0	* 5				
Max Green Setting (Gmax), s		47.0	17.0	19.0		28.0	10.0	* 26				
Max Q Clear Time (g_c+I1), s		42.5	11.1	24.5		30.0	9.0	24.3				
Green Ext Time (p_c), s		4.4	0.2	0.0		0.0	0.0	1.3				

Intersection Summary	
HCM 6th Ctrl Delay	58.5
HCM 6th LOS	E

Notes

User approved volume balancing among the lanes for turning movement.
* HCM 6th computational engine requires equal clearance times for the phases crossing the barrier.
User approved changes to right turn type.

Movement	EBL	EBT	EBR	WBL	WBT	WBR	NBL	NBT	NBR	SBL	SBT	SBR
Lane Configurations												
Traffic Volume (veh/h)	85	1165	5	5	1445	5	30	5	10	5	5	135
Future Volume (veh/h)	85	1165	5	5	1445	5	30	5	10	5	5	135
Initial Q (Qb), veh	0	0	0	0	0	0	0	0	0	0	0	0
Ped-Bike Adj(A_pbT)	1.00		1.00	1.00		1.00	1.00		1.00	1.00		1.00
Parking Bus, Adj	1.00	1.00	1.00	1.00	1.00	1.00	1.00	1.00	1.00	1.00	1.00	1.00
Work Zone On Approach		No			No			No			No	
Adj Sat Flow, veh/h/ln	1856	1856	1856	1856	1856	1856	1900	1900	1900	1885	1885	1885
Adj Flow Rate, veh/h	91	1253	5	5	1554	5	32	5	11	5	5	145
Peak Hour Factor	0.93	0.93	0.93	0.93	0.93	0.93	0.93	0.93	0.93	0.93	0.93	0.93
Percent Heavy Veh, %	3	3	3	3	3	3	0	0	0	1	1	1
Cap, veh/h	112	2692	11	11	2488	8	183	56	123	115	102	170
Arrive On Green	0.13	1.00	1.00	0.01	0.69	0.69	0.11	0.11	0.11	0.11	0.11	0.11
Sat Flow, veh/h	1767	3601	14	1767	3605	12	1257	528	1162	690	961	1598
Grp Volume(v), veh/h	91	613	645	5	760	799	32	0	16	10	0	145
Grp Sat Flow(s),veh/h/ln	1767	1763	1853	1767	1763	1853	1257	0	1691	1651	0	1598
Q Serve(g_s), s	6.5	0.0	0.0	0.4	30.5	30.5	3.1	0.0	1.1	0.0	0.0	11.6
Cycle Q Clear(g_c), s	6.5	0.0	0.0	0.4	30.5	30.5	3.7	0.0	1.1	0.6	0.0	11.6
Prop In Lane	1.00		0.01	1.00		0.01	1.00		0.69	0.50		1.00
Lane Grp Cap(c), veh/h	112	1318	1385	11	1217	1280	183	0	180	217	0	170
V/C Ratio(X)	0.81	0.47	0.47	0.45	0.62	0.62	0.17	0.00	0.09	0.05	0.00	0.85
Avail Cap(c_a), veh/h	155	1318	1385	155	1217	1280	359	0	416	257	0	209
HCM Platoon Ratio	2.00	2.00	2.00	1.00	1.00	1.00	1.00	1.00	1.00	1.00	1.00	1.00
Upstream Filter(I)	0.48	0.48	0.48	1.00	1.00	1.00	1.00	0.00	1.00	1.00	0.00	1.00
Uniform Delay (d), s/veh	56.0	0.0	0.0	64.4	11.0	11.0	53.9	0.0	52.4	52.2	0.0	57.1
Incr Delay (d2), s/veh	10.4	0.3	0.3	25.3	2.4	2.3	0.6	0.0	0.3	0.1	0.0	25.8
Initial Q Delay(d3),s/veh	0.0	0.0	0.0	0.0	0.0	0.0	0.0	0.0	0.0	0.0	0.0	0.0
%ile BackOfQ(50%),veh/ln	3.1	0.1	0.1	0.2	11.6	12.2	1.0	0.0	0.5	0.3	0.0	5.9
Unsig. Movement Delay, s/veh												
LnGrp Delay(d),s/veh	66.4	0.3	0.3	89.6	13.4	13.3	54.5	0.0	52.7	52.3	0.0	82.9
LnGrp LOS	E	A	A	F	B	B	D	A	D	D	A	F
Approach Vol, veh/h		1349			1564			48			155	
Approach Delay, s/veh		4.7			13.6			53.9			80.9	
Approach LOS		A			B			D			F	

Timer - Assigned Phs	1	2		4	5	6		8
Phs Duration (G+Y+Rc), s	14.9	96.3		18.8	7.4	103.8		18.8
Change Period (Y+Rc), s	6.6	6.6		5.0	6.6	6.6		5.0
Max Green Setting (Gmax), s	11.4	68.4		32.0	11.4	68.4		17.0
Max Q Clear Time (g_c+I1), s	8.5	32.5		5.7	2.4	2.0		13.6
Green Ext Time (p_c), s	0.1	35.6		0.2	0.0	32.8		0.2

Intersection Summary		
HCM 6th Ctrl Delay		13.7
HCM 6th LOS		B

Movement	EBL	EBT	EBR	WBL	WBT	WBR	NBL	NBT	NBR	SBL	SBT	SBR
Lane Configurations												
Traffic Volume (veh/h)	25	1100	55	30	1270	25	160	15	85	45	10	25
Future Volume (veh/h)	25	1100	55	30	1270	25	160	15	85	45	10	25
Initial Q (Qb), veh	0	0	0	0	0	0	0	0	0	0	0	0
Ped-Bike Adj(A_pbT)	1.00		0.99	1.00		0.99	1.00		0.98	1.00		0.94
Parking Bus, Adj	1.00	1.00	1.00	1.00	1.00	1.00	1.00	1.00	1.00	1.00	1.00	1.00
Work Zone On Approach		No			No			No			No	
Adj Sat Flow, veh/h/ln	1796	1796	1796	1856	1856	1856	1870	1870	1870	1826	1826	1826
Adj Flow Rate, veh/h	26	1122	56	31	1296	26	163	15	87	46	10	26
Peak Hour Factor	0.98	0.98	0.98	0.98	0.98	0.98	0.98	0.98	0.98	0.98	0.98	0.98
Percent Heavy Veh, %	7	7	7	3	3	3	2	2	2	5	5	5
Cap, veh/h	40	2229	111	46	2391	48	201	26	153	71	18	46
Arrive On Green	0.02	0.67	0.67	0.05	1.00	1.00	0.11	0.11	0.11	0.04	0.04	0.04
Sat Flow, veh/h	1711	3307	165	1767	3534	71	1781	234	1357	1739	429	1115
Grp Volume(v), veh/h	26	579	599	31	646	676	163	0	102	46	0	36
Grp Sat Flow(s),veh/h/ln	1711	1706	1766	1767	1763	1842	1781	0	1591	1739	0	1544
Q Serve(g_s), s	2.0	21.8	21.8	2.2	0.0	0.0	11.6	0.0	7.9	3.4	0.0	3.0
Cycle Q Clear(g_c), s	2.0	21.8	21.8	2.2	0.0	0.0	11.6	0.0	7.9	3.4	0.0	3.0
Prop In Lane	1.00		0.09	1.00		0.04	1.00		0.85	1.00		0.72
Lane Grp Cap(c), veh/h	40	1150	1190	46	1192	1246	201	0	180	71	0	63
V/C Ratio(X)	0.65	0.50	0.50	0.68	0.54	0.54	0.81	0.00	0.57	0.64	0.00	0.57
Avail Cap(c_a), veh/h	184	1150	1190	190	1192	1246	247	0	220	241	0	214
HCM Platoon Ratio	1.00	1.00	1.00	2.00	2.00	2.00	1.00	1.00	1.00	1.00	1.00	1.00
Upstream Filter(I)	1.00	1.00	1.00	0.82	0.82	0.82	1.00	0.00	1.00	1.00	0.00	1.00
Uniform Delay (d), s/veh	62.9	10.5	10.5	61.1	0.0	0.0	56.3	0.0	54.7	61.4	0.0	61.2
Incr Delay (d2), s/veh	16.3	1.6	1.5	13.4	1.5	1.4	16.9	0.0	4.0	12.9	0.0	10.8
Initial Q Delay(d3),s/veh	0.0	0.0	0.0	0.0	0.0	0.0	0.0	0.0	0.0	0.0	0.0	0.0
%ile BackOfQ(50%),veh/ln	1.0	8.1	8.4	1.2	0.5	0.5	6.2	0.0	3.4	1.8	0.0	1.4
Unsig. Movement Delay, s/veh												
LnGrp Delay(d),s/veh	79.2	12.0	12.0	74.5	1.5	1.4	73.3	0.0	58.6	74.3	0.0	72.0
LnGrp LOS	E	B	B	E	A	A	E	A	E	E	A	E
Approach Vol, veh/h		1204			1353			265			82	
Approach Delay, s/veh		13.5			3.1			67.6			73.3	
Approach LOS		B			A			E			E	

Timer - Assigned Phs	1	2		4	5	6		8				
Phs Duration (G+Y+Rc), s	7.0	92.9		19.7	7.4	92.6		10.3				
Change Period (Y+Rc), s	4.0	5.0		5.0	4.0	5.0		5.0				
Max Green Setting (Gmax), s	14.0	61.0		18.0	14.0	61.0		18.0				
Max Q Clear Time (g_c+I1), s	4.0	2.0		13.6	4.2	23.8		5.4				
Green Ext Time (p_c), s	0.0	45.7		0.5	0.0	27.4		0.2				

Intersection Summary	
HCM 6th Ctrl Delay	15.3
HCM 6th LOS	B

Notes

User approved pedestrian interval to be less than phase max green.

Movement	EBL	EBT	EBR	WBL	WBT	WBR	NBL	NBT	NBR	SBL	SBT	SBR
Lane Configurations												
Traffic Volume (veh/h)	20	1130	85	20	1250	95	65	10	26	60	5	10
Future Volume (veh/h)	20	1130	85	20	1250	95	65	10	26	60	5	10
Initial Q (Qb), veh	0	0	0	0	0	0	0	0	0	0	0	0
Ped-Bike Adj(A_pbT)	1.00		1.00	1.00		1.00	1.00		1.00	1.00		1.00
Parking Bus, Adj	1.00	1.00	1.00	1.00	1.00	1.00	1.00	1.00	1.00	1.00	1.00	1.00
Work Zone On Approach		No			No			No			No	
Adj Sat Flow, veh/h/ln	1841	1841	1841	1870	1870	1870	1307	1307	1307	1826	1826	1826
Adj Flow Rate, veh/h	21	1165	88	21	1289	98	67	10	27	62	5	10
Peak Hour Factor	0.97	0.97	0.97	0.97	0.97	0.97	0.97	0.97	0.97	0.97	0.97	0.97
Percent Heavy Veh, %	4	4	4	2	2	2	40	40	40	5	5	5
Cap, veh/h	36	2365	178	36	2402	182	116	18	31	228	16	270
Arrive On Green	0.04	1.00	1.00	0.02	0.72	0.72	0.15	0.15	0.15	0.15	0.15	0.15
Sat Flow, veh/h	1753	3296	249	1781	3347	254	455	119	201	1130	106	1544
Grp Volume(v), veh/h	21	618	635	21	683	704	104	0	0	67	0	10
Grp Sat Flow(s),veh/h/ln	1753	1749	1796	1781	1777	1824	775	0	0	1236	0	1544
Q Serve(g_s), s	1.5	0.0	0.0	1.5	22.9	23.1	11.5	0.0	0.0	0.0	0.0	0.7
Cycle Q Clear(g_c), s	1.5	0.0	0.0	1.5	22.9	23.1	17.9	0.0	0.0	6.3	0.0	0.7
Prop In Lane	1.00		0.14	1.00		0.14	0.64		0.26	0.93		1.00
Lane Grp Cap(c), veh/h	36	1255	1288	36	1275	1309	165	0	0	244	0	270
V/C Ratio(X)	0.59	0.49	0.49	0.58	0.54	0.54	0.63	0.00	0.00	0.27	0.00	0.04
Avail Cap(c_a), veh/h	94	1255	1288	69	1275	1309	196	0	0	285	0	317
HCM Platoon Ratio	2.00	2.00	2.00	1.00	1.00	1.00	1.00	1.00	1.00	1.00	1.00	1.00
Upstream Filter(I)	0.80	0.80	0.80	1.00	1.00	1.00	1.00	0.00	0.00	1.00	0.00	1.00
Uniform Delay (d), s/veh	61.8	0.0	0.0	63.1	8.4	8.5	56.0	0.0	0.0	49.1	0.0	44.5
Incr Delay (d2), s/veh	11.6	1.1	1.1	13.6	1.6	1.6	4.7	0.0	0.0	0.6	0.0	0.1
Initial Q Delay(d3),s/veh	0.0	0.0	0.0	0.0	0.0	0.0	0.0	0.0	0.0	0.0	0.0	0.0
%ile BackOfQ(50%),veh/ln	0.8	0.4	0.4	0.8	8.4	8.7	3.6	0.0	0.0	2.0	0.0	0.3
Unsig. Movement Delay, s/veh												
LnGrp Delay(d),s/veh	73.4	1.1	1.1	76.7	10.0	10.0	60.7	0.0	0.0	49.7	0.0	44.6
LnGrp LOS	E	A	A	E	B	B	E	A	A	D	A	D
Approach Vol, veh/h		1274			1408			104			77	
Approach Delay, s/veh		2.3			11.0			60.7			49.1	
Approach LOS		A			B			E			D	

Timer - Assigned Phs	1	2		4	5	6		8
Phs Duration (G+Y+Rc), s	6.7	98.3		25.1	6.7	98.3		25.1
Change Period (Y+Rc), s	4.0	5.0		5.0	4.0	5.0		5.0
Max Green Setting (Gmax), s	7.0	85.0		24.0	5.0	87.0		24.0
Max Q Clear Time (g_c+I1), s	3.5	25.1		8.3	3.5	2.0		19.9
Green Ext Time (p_c), s	0.0	49.5		0.1	0.0	65.4		0.1

Intersection Summary	
HCM 6th Ctrl Delay	10.0
HCM 6th LOS	A

Notes

User approved pedestrian interval to be less than phase max green.

Movement	EBL	EBT	EBR	WBL	WBT	WBR	NBL	NBT	NBR	SBL	SBT	SBR
Lane Configurations												
Traffic Volume (veh/h)	10	1007	5	5	1351	10	10	0	5	10	0	5
Future Volume (veh/h)	10	1007	5	5	1351	10	10	0	5	10	0	5
Initial Q (Qb), veh	0	0	0	0	0	0	0	0	0	0	0	0
Ped-Bike Adj(A_pbT)	1.00		1.00	1.00		1.00	1.00		1.00	1.00		1.00
Parking Bus, Adj	1.00	1.00	1.00	1.00	1.00	1.00	1.00	1.00	1.00	1.00	1.00	1.00
Work Zone On Approach		No			No			No			No	
Adj Sat Flow, veh/h/ln	1796	1796	1796	1781	1781	1781	1796	1796	1796	1633	1633	1633
Adj Flow Rate, veh/h	11	1131	6	6	1518	11	11	0	6	11	0	6
Peak Hour Factor	0.89	0.89	0.89	0.89	0.89	0.89	0.89	0.89	0.89	0.89	0.89	0.89
Percent Heavy Veh, %	7	7	7	8	8	8	7	7	7	18	18	18
Cap, veh/h	24	2344	1046	13	2305	1028	110	0	49	110	0	45
Arrive On Green	0.01	0.69	0.69	0.01	0.68	0.68	0.03	0.00	0.03	0.03	0.00	0.03
Sat Flow, veh/h	1711	3413	1522	1697	3385	1510	0	0	1522	0	0	1384
Grp Volume(v), veh/h	11	1131	6	6	1518	11	11	0	6	11	0	6
Grp Sat Flow(s),veh/h/ln	1711	1706	1522	1697	1692	1510	0	0	1522	0	0	1384
Q Serve(g_s), s	0.4	10.1	0.1	0.2	16.9	0.2	0.0	0.0	0.2	0.0	0.0	0.3
Cycle Q Clear(g_c), s	0.4	10.1	0.1	0.2	16.9	0.2	2.1	0.0	0.2	2.1	0.0	0.3
Prop In Lane	1.00		1.00	1.00		1.00	1.00		1.00	1.00		1.00
Lane Grp Cap(c), veh/h	24	2344	1046	13	2305	1028	110	0	49	110	0	45
V/C Ratio(X)	0.46	0.48	0.01	0.45	0.66	0.01	0.10	0.00	0.12	0.10	0.00	0.13
Avail Cap(c_a), veh/h	131	2782	1241	130	2759	1231	709	0	723	410	0	382
HCM Platoon Ratio	1.00	1.00	1.00	1.00	1.00	1.00	1.00	1.00	1.00	1.00	1.00	1.00
Upstream Filter(I)	1.00	1.00	1.00	1.00	1.00	1.00	1.00	0.00	1.00	1.00	0.00	1.00
Uniform Delay (d), s/veh	31.9	4.8	3.2	32.2	6.0	3.3	32.6	0.0	30.7	32.6	0.0	30.7
Incr Delay (d2), s/veh	13.5	0.3	0.0	21.7	0.8	0.0	0.4	0.0	1.1	0.8	0.0	2.8
Initial Q Delay(d3),s/veh	0.0	0.0	0.0	0.0	0.0	0.0	0.0	0.0	0.0	0.0	0.0	0.0
%ile BackOfQ(50%),veh/ln	0.3	2.5	0.0	0.2	4.3	0.0	0.2	0.0	0.1	0.2	0.0	0.1
Unsig. Movement Delay, s/veh												
LnGrp Delay(d),s/veh	45.4	5.1	3.2	53.9	6.8	3.4	33.0	0.0	31.7	33.5	0.0	33.5
LnGrp LOS	D	A	A	D	A	A	C	A	C	C	A	C
Approach Vol, veh/h		1148			1535			17			17	
Approach Delay, s/veh		5.5			7.0			32.6			33.5	
Approach LOS		A			A			C			C	

Timer - Assigned Phs	1	2		4	5	6		8
Phs Duration (G+Y+Rc), s	7.3	50.8		7.1	6.9	51.2		7.1
Change Period (Y+Rc), s	6.4	6.4		5.0	6.4	6.4		5.0
Max Green Setting (Gmax), s	5.0	53.2		18.0	5.0	53.2		31.0
Max Q Clear Time (g_c+I1), s	2.4	18.9		4.1	2.2	12.1		4.1
Green Ext Time (p_c), s	0.0	25.5		0.0	0.0	20.7		0.0

Intersection Summary	
HCM 6th Ctrl Delay	6.7
HCM 6th LOS	A

Intersection	
Int Delay, s/veh	2.2

Movement	EBL	EBT	WBT	WBR	SBL	SBR
Lane Configurations						
Traffic Vol, veh/h	31	100	105	9	4	32
Future Vol, veh/h	31	100	105	9	4	32
Conflicting Peds, #/hr	0	0	0	0	0	0
Sign Control	Free	Free	Free	Free	Stop	Stop
RT Channelized	-	None	-	None	-	None
Storage Length	450	-	-	-	0	-
Veh in Median Storage, #	-	0	0	-	0	-
Grade, %	-	0	0	-	0	-
Peak Hour Factor	78	78	78	78	78	78
Heavy Vehicles, %	86	86	77	77	54	54
Mvmt Flow	40	128	135	12	5	41

Major/Minor	Major1		Major2		Minor2	
Conflicting Flow All	147	0	-	0	349	141
Stage 1	-	-	-	-	141	-
Stage 2	-	-	-	-	208	-
Critical Hdwy	4.96	-	-	-	6.94	6.74
Critical Hdwy Stg 1	-	-	-	-	5.94	-
Critical Hdwy Stg 2	-	-	-	-	5.94	-
Follow-up Hdwy	2.974	-	-	-	3.986	3.786
Pot Cap-1 Maneuver	1050	-	-	-	556	786
Stage 1	-	-	-	-	773	-
Stage 2	-	-	-	-	717	-
Platoon blocked, %		-	-	-		
Mov Cap-1 Maneuver	1050	-	-	-	535	786
Mov Cap-2 Maneuver	-	-	-	-	535	-
Stage 1	-	-	-	-	744	-
Stage 2	-	-	-	-	717	-

Approach	EB	WB	SB
HCM Control Delay, s	2	0	10.1
HCM LOS			B

Minor Lane/Major Mvmt	EBL	EBT	WBT	WBR	SBLn1
Capacity (veh/h)	1050	-	-	-	747
HCM Lane V/C Ratio	0.038	-	-	-	0.062
HCM Control Delay (s)	8.6	-	-	-	10.1
HCM Lane LOS	A	-	-	-	B
HCM 95th %tile Q(veh)	0.1	-	-	-	0.2

Intersection	
Int Delay, s/veh	4.5

Movement	EBL	EBT	EBR	WBL	WBT	WBR	NBL	NBT	NBR	SBL	SBT	SBR
Lane Configurations												
Traffic Vol, veh/h	35	121	40	15	117	5	50	0	10	5	10	35
Future Vol, veh/h	35	121	40	15	117	5	50	0	10	5	10	35
Conflicting Peds, #/hr	0	0	0	0	0	0	0	0	0	0	0	0
Sign Control	Free	Free	Free	Free	Free	Free	Stop	Stop	Stop	Stop	Stop	Stop
RT Channelized	-	-	None	-	-	None	-	-	None	-	-	None
Storage Length	-	-	-	-	-	-	-	-	-	-	-	-
Veh in Median Storage, #	-	0	-	-	0	-	-	0	-	-	0	-
Grade, %	-	0	-	-	0	-	-	0	-	-	0	-
Peak Hour Factor	81	81	81	81	81	81	81	81	81	81	81	81
Heavy Vehicles, %	36	36	36	30	30	30	35	35	35	91	91	91
Mvmt Flow	43	149	49	19	144	6	62	0	12	6	12	43

Major/Minor	Major1			Major2			Minor1			Minor2		
Conflicting Flow All	150	0	0	198	0	0	473	448	99	346	469	147
Stage 1	-	-	-	-	-	-	260	260	-	185	185	-
Stage 2	-	-	-	-	-	-	213	188	-	161	284	-
Critical Hdwy	4.64	-	-	4.55	-	-	7.825	7.025	7.425	8.665	7.865	7.565
Critical Hdwy Stg 1	-	-	-	-	-	-	7.025	6.025	-	7.465	6.865	-
Critical Hdwy Stg 2	-	-	-	-	-	-	6.625	6.025	-	7.865	6.865	-
Follow-up Hdwy	2.542	-	-	2.485	-	-	3.8325	4.3325	3.6325	4.3645	4.8645	4.1645
Pot Cap-1 Maneuver	1230	-	-	1207	-	-	428	448	849	439	359	690
Stage 1	-	-	-	-	-	-	647	626	-	627	588	-
Stage 2	-	-	-	-	-	-	709	678	-	639	518	-
Platoon blocked, %		-	-		-	-						
Mov Cap-1 Maneuver	1230	-	-	1207	-	-	373	423	849	414	339	690
Mov Cap-2 Maneuver	-	-	-	-	-	-	373	423	-	414	339	-
Stage 1	-	-	-	-	-	-	621	601	-	602	578	-
Stage 2	-	-	-	-	-	-	639	666	-	605	497	-

Approach	EB	WB	NB	SB
HCM Control Delay, s	1.5	0.9	15.7	12.5
HCM LOS			C	B

Minor Lane/Major Mvmt	NBLn1	EBL	EBT	EBR	WBL	WBT	WBR	SBLn1
Capacity (veh/h)	411	1230	-	-	1207	-	-	542
HCM Lane V/C Ratio	0.18	0.035	-	-	0.015	-	-	0.114
HCM Control Delay (s)	15.7	8	0.1	-	8	0	-	12.5
HCM Lane LOS	C	A	A	-	A	A	-	B
HCM 95th %tile Q(veh)	0.7	0.1	-	-	0	-	-	0.4

Movement	WBL	WBR	NBT	NBR	SBL	SBT
Lane Configurations						
Traffic Volume (veh/h)	72	134	432	96	115	441
Future Volume (veh/h)	72	134	432	96	115	441
Initial Q (Qb), veh	0	0	0	0	0	0
Ped-Bike Adj(A_pbT)	1.00	1.00		1.00	1.00	
Parking Bus, Adj	1.00	1.00	1.00	1.00	1.00	1.00
Work Zone On Approach	No		No			No
Adj Sat Flow, veh/h/ln	1233	1233	1796	1796	1678	1678
Adj Flow Rate, veh/h	78	146	470	104	125	479
Peak Hour Factor	0.92	0.92	0.92	0.92	0.92	0.92
Percent Heavy Veh, %	45	45	7	7	15	15
Cap, veh/h	88	166	537	119	281	898
Arrive On Green	0.23	0.23	0.38	0.38	0.07	0.54
Sat Flow, veh/h	377	706	1424	315	1598	1678
Grp Volume(v), veh/h	225	0	0	574	125	479
Grp Sat Flow(s),veh/h/ln	1087	0	0	1740	1598	1678
Q Serve(g_s), s	12.5	0.0	0.0	19.2	2.8	11.6
Cycle Q Clear(g_c), s	12.5	0.0	0.0	19.2	2.8	11.6
Prop In Lane	0.35	0.65		0.18	1.00	
Lane Grp Cap(c), veh/h	255	0	0	656	281	898
V/C Ratio(X)	0.88	0.00	0.00	0.88	0.45	0.53
Avail Cap(c_a), veh/h	411	0	0	749	298	988
HCM Platoon Ratio	1.00	1.00	1.00	1.00	1.00	1.00
Upstream Filter(I)	1.00	0.00	0.00	1.00	1.00	1.00
Uniform Delay (d), s/veh	23.1	0.0	0.0	18.2	13.5	9.5
Incr Delay (d2), s/veh	12.3	0.0	0.0	10.9	1.6	0.7
Initial Q Delay(d3),s/veh	0.0	0.0	0.0	0.0	0.0	0.0
%ile BackOfQ(50%),veh/ln	3.8	0.0	0.0	8.8	1.0	3.7
Unsig. Movement Delay, s/veh						
LnGrp Delay(d),s/veh	35.5	0.0	0.0	29.1	15.1	10.2
LnGrp LOS	D	A	A	C	B	B
Approach Vol, veh/h	225		574			604
Approach Delay, s/veh	35.5		29.1			11.2
Approach LOS	D		C			B

Timer - Assigned Phs	1	2				6	8
Phs Duration (G+Y+Rc), s	9.9	31.7				41.7	21.0
Change Period (Y+Rc), s	5.5	* 8.1				* 8.1	6.3
Max Green Setting (Gmax), s	5.1	* 27				* 37	23.7
Max Q Clear Time (g_c+I1), s	4.8	21.2				13.6	14.5
Green Ext Time (p_c), s	0.0	2.4				4.5	0.5

Intersection Summary	
HCM 6th Ctrl Delay	22.4
HCM 6th LOS	C

Notes

User approved pedestrian interval to be less than phase max green.

User approved volume balancing among the lanes for turning movement.

* HCM 6th computational engine requires equal clearance times for the phases crossing the barrier.

Movement	EBL	EBR	NBL	NBT	SBT	SBR
Lane Configurations						
Traffic Volume (vph)	70	70	90	434	374	90
Future Volume (vph)	70	70	90	434	374	90
Ideal Flow (vphpl)	1900	1900	1900	1900	1900	1900
Total Lost time (s)	5.0	5.0	6.5	6.5	6.5	6.5
Lane Util. Factor	1.00	1.00	1.00	1.00	1.00	1.00
Frt	1.00	0.85	1.00	1.00	1.00	0.85
Flt Protected	0.95	1.00	0.95	1.00	1.00	1.00
Satd. Flow (prot)	1671	1495	1719	1810	1792	1524
Flt Permitted	0.95	1.00	0.39	1.00	1.00	1.00
Satd. Flow (perm)	1671	1495	699	1810	1792	1524
Peak-hour factor, PHF	0.96	0.96	0.96	0.96	0.96	0.96
Adj. Flow (vph)	73	73	94	452	390	94
RTOR Reduction (vph)	0	65	0	0	0	44
Lane Group Flow (vph)	73	8	94	452	390	50
Heavy Vehicles (%)	8%	8%	5%	5%	6%	6%
Turn Type	custom	custom	pm+pt	NA	NA	Perm
Protected Phases	3	3	5	2	6	
Permitted Phases	4	4	2			6
Actuated Green, G (s)	5.5	5.5	34.9	34.9	22.9	22.9
Effective Green, g (s)	5.5	5.5	34.9	34.9	22.9	22.9
Actuated g/C Ratio	0.11	0.11	0.67	0.67	0.44	0.44
Clearance Time (s)	5.0	5.0	6.5	6.5	6.5	6.5
Vehicle Extension (s)	2.0	2.0	2.0	5.0	5.0	5.0
Lane Grp Cap (vph)	177	158	578	1217	790	672
v/s Ratio Prot	c0.04	0.01	0.02	c0.25	c0.22	
v/s Ratio Perm			0.09			0.03
v/c Ratio	0.41	0.05	0.16	0.37	0.49	0.08
Uniform Delay, d1	21.7	20.8	3.6	3.7	10.4	8.4
Progression Factor	1.00	1.00	1.00	1.00	1.00	1.00
Incremental Delay, d2	0.6	0.0	0.0	0.4	1.0	0.1
Delay (s)	22.3	20.9	3.7	4.1	11.4	8.5
Level of Service	C	C	A	A	B	A
Approach Delay (s)	21.6			4.0	10.8	
Approach LOS	C			A	B	

Intersection Summary			
HCM 2000 Control Delay	9.0	HCM 2000 Level of Service	A
HCM 2000 Volume to Capacity ratio	0.55		
Actuated Cycle Length (s)	51.9	Sum of lost time (s)	21.0
Intersection Capacity Utilization	43.8%	ICU Level of Service	A
Analysis Period (min)	15		
c Critical Lane Group			

Movement	EBL	EBR	NBL	NBT	SBT	SBR
Lane Configurations						
Traffic Volume (vph)	144	10	10	340	290	114
Future Volume (vph)	144	10	10	340	290	114
Ideal Flow (vphpl)	1900	1900	1900	1900	1900	1900
Total Lost time (s)	5.0	5.0	6.0	6.0	6.0	5.0
Lane Util. Factor	1.00	1.00	1.00	1.00	1.00	1.00
Frpb, ped/bikes	1.00	1.00	1.00	1.00	1.00	0.99
Flpb, ped/bikes	1.00	1.00	1.00	1.00	1.00	1.00
Frt	1.00	0.85	1.00	1.00	1.00	0.85
Flt Protected	0.95	1.00	0.95	1.00	1.00	1.00
Satd. Flow (prot)	1671	1495	1736	1827	1792	1505
Flt Permitted	0.95	1.00	0.40	1.00	1.00	1.00
Satd. Flow (perm)	1671	1495	725	1827	1792	1505
Peak-hour factor, PHF	0.95	0.95	0.95	0.95	0.95	0.95
Adj. Flow (vph)	152	11	11	358	305	120
RTOR Reduction (vph)	0	9	0	0	0	53
Lane Group Flow (vph)	152	2	11	358	305	67
Confl. Bikes (#/hr)						1
Heavy Vehicles (%)	8%	8%	4%	4%	6%	6%
Turn Type	custom	custom	pm+pt	NA	NA	pm+ov
Protected Phases	3	3	5	2	6	3
Permitted Phases	4	4	2			6
Actuated Green, G (s)	8.9	8.9	20.1	20.1	13.4	22.3
Effective Green, g (s)	8.9	8.9	20.1	20.1	13.4	22.3
Actuated g/C Ratio	0.22	0.22	0.50	0.50	0.34	0.56
Clearance Time (s)	5.0	5.0	6.0	6.0	6.0	5.0
Vehicle Extension (s)	2.0	2.0	2.0	2.0	2.0	2.0
Lane Grp Cap (vph)	371	332	382	918	600	839
v/s Ratio Prot	c0.09	0.00	0.00	c0.20	c0.17	0.02
v/s Ratio Perm			0.01			0.03
v/c Ratio	0.41	0.01	0.03	0.39	0.51	0.08
Uniform Delay, d1	13.3	12.1	5.4	6.2	10.7	4.1
Progression Factor	1.00	1.00	1.00	1.00	1.00	1.00
Incremental Delay, d2	0.3	0.0	0.0	0.1	0.2	0.0
Delay (s)	13.6	12.1	5.4	6.3	10.9	4.1
Level of Service	B	B	A	A	B	A
Approach Delay (s)	13.5			6.2	9.0	
Approach LOS	B			A	A	

Intersection Summary			
HCM 2000 Control Delay	8.7	HCM 2000 Level of Service	A
HCM 2000 Volume to Capacity ratio	0.60		
Actuated Cycle Length (s)	40.0	Sum of lost time (s)	20.0
Intersection Capacity Utilization	35.0%	ICU Level of Service	A
Analysis Period (min)	15		

c Critical Lane Group

Intersection	
Int Delay, s/veh	1.1

Movement	EBL	EBT	EBR	WBL	WBT	WBR	NBL	NBT	NBR	SBL	SBT	SBR
Lane Configurations												
Traffic Vol, veh/h	0	0	0	25	0	15	20	230	0	0	100	165
Future Vol, veh/h	0	0	0	25	0	15	20	230	0	0	100	165
Conflicting Peds, #/hr	0	0	0	0	0	0	0	0	0	0	0	0
Sign Control	Stop	Stop	Stop	Stop	Stop	Stop	Free	Free	Free	Free	Free	Free
RT Channelized	-	-	None	-	-	None	-	-	None	-	-	None
Storage Length	-	-	-	-	-	500	175	-	-	-	-	375
Veh in Median Storage, #	-	1	-	-	0	-	-	0	-	-	0	-
Grade, %	-	0	-	-	0	-	-	0	-	-	0	-
Peak Hour Factor	92	92	92	92	92	92	92	92	92	92	92	92
Heavy Vehicles, %	0	0	0	7	7	7	6	6	6	4	4	4
Mvmt Flow	0	0	0	27	0	16	22	250	0	0	109	179

Major/Minor	Minor1		Major1			Major2			
Conflicting Flow All	493	582	250	288	0	-	-	-	0
Stage 1	294	294	-	-	-	-	-	-	-
Stage 2	199	288	-	-	-	-	-	-	-
Critical Hdwy	6.47	6.57	6.27	4.16	-	-	-	-	-
Critical Hdwy Stg 1	5.47	5.57	-	-	-	-	-	-	-
Critical Hdwy Stg 2	5.47	5.57	-	-	-	-	-	-	-
Follow-up Hdwy	3.563	4.063	3.363	2.254	-	-	-	-	-
Pot Cap-1 Maneuver	526	418	777	1251	-	0	0	-	-
Stage 1	745	661	-	-	-	0	0	-	-
Stage 2	823	665	-	-	-	0	0	-	-
Platoon blocked, %					-			-	-
Mov Cap-1 Maneuver	517	0	777	1251	-	-	-	-	-
Mov Cap-2 Maneuver	517	0	-	-	-	-	-	-	-
Stage 1	732	0	-	-	-	-	-	-	-
Stage 2	823	0	-	-	-	-	-	-	-

Approach	WB	NB	SB
HCM Control Delay, s	11.3	0.6	0
HCM LOS	B		

Minor Lane/Major Mvmt	NBL	NBT	WBLn1	WBLn2	SBT	SBR
Capacity (veh/h)	1251	-	517	777	-	-
HCM Lane V/C Ratio	0.017	-	0.053	0.021	-	-
HCM Control Delay (s)	7.9	-	12.3	9.7	-	-
HCM Lane LOS	A	-	B	A	-	-
HCM 95th %tile Q(veh)	0.1	-	0.2	0.1	-	-

Movement	EBL	EBR	NBL	NBT	SBT	SBR
Lane Configurations						
Traffic Volume (veh/h)	160	10	25	110	115	15
Future Volume (veh/h)	160	10	25	110	115	15
Initial Q (Qb), veh	0	0	0	0	0	0
Ped-Bike Adj(A_pbT)	1.00	1.00	1.00			0.98
Parking Bus, Adj	1.00	1.00	1.00	1.00	1.00	1.00
Work Zone On Approach	No			No	No	
Adj Sat Flow, veh/h/ln	1841	1841	1811	1811	1752	1752
Adj Flow Rate, veh/h	184	11	29	126	132	17
Peak Hour Factor	0.87	0.87	0.87	0.87	0.87	0.87
Percent Heavy Veh, %	4	4	6	6	10	10
Cap, veh/h	391	348	234	259	297	38
Arrive On Green	0.22	0.22	0.20	0.20	0.20	0.20
Sat Flow, veh/h	1753	1560	188	1325	1516	195
Grp Volume(v), veh/h	184	11	155	0	0	149
Grp Sat Flow(s),veh/h/ln	1753	1560	1513	0	0	1712
Q Serve(g_s), s	2.0	0.1	0.5	0.0	0.0	1.7
Cycle Q Clear(g_c), s	2.0	0.1	2.2	0.0	0.0	1.7
Prop In Lane	1.00	1.00	0.19			0.11
Lane Grp Cap(c), veh/h	391	348	493	0	0	335
V/C Ratio(X)	0.47	0.03	0.31	0.00	0.00	0.44
Avail Cap(c_a), veh/h	3937	3503	4645	0	0	2660
HCM Platoon Ratio	1.00	1.00	1.00	1.00	1.00	1.00
Upstream Filter(I)	1.00	1.00	1.00	0.00	0.00	1.00
Uniform Delay (d), s/veh	7.3	6.6	7.8	0.0	0.0	7.7
Incr Delay (d2), s/veh	0.9	0.0	0.8	0.0	0.0	2.0
Initial Q Delay(d3),s/veh	0.0	0.0	0.0	0.0	0.0	0.0
%ile BackOfQ(50%),veh/ln	0.5	0.0	0.4	0.0	0.0	0.5
Unsig. Movement Delay, s/veh						
LnGrp Delay(d),s/veh	8.2	6.6	8.6	0.0	0.0	9.6
LnGrp LOS	A	A	A	A	A	A
Approach Vol, veh/h	195			155	149	
Approach Delay, s/veh	8.1			8.6	9.6	
Approach LOS	A			A	A	

Timer - Assigned Phs		2		4		6
Phs Duration (G+Y+Rc), s		10.5		11.1		10.5
Change Period (Y+Rc), s		6.3		6.3		6.3
Max Green Setting (Gmax), s		58.7		48.7		33.7
Max Q Clear Time (g_c+I1), s		4.2		4.0		3.7
Green Ext Time (p_c), s		2.0		0.6		1.6

Intersection Summary	
HCM 6th Ctrl Delay	8.7
HCM 6th LOS	A

Movement	EBL	EBT	EBR	WBL	WBT	WBR	NBL	NBT	NBR	SBL	SBT	SBR
Lane Configurations												
Traffic Volume (veh/h)	90	10	15	5	0	10	15	556	10	15	521	85
Future Volume (veh/h)	90	10	15	5	0	10	15	556	10	15	521	85
Initial Q (Qb), veh	0	0	0	0	0	0	0	0	0	0	0	0
Ped-Bike Adj(A_pbT)	1.00		0.98	1.00		1.00	1.00		0.98	1.00		1.00
Parking Bus, Adj	1.00	1.00	1.00	1.00	1.00	1.00	1.00	1.00	1.00	1.00	1.00	1.00
Work Zone On Approach		No			No			No			No	
Adj Sat Flow, veh/h/ln	1856	1856	1856	1559	1559	1559	1663	1663	1663	1678	1678	1678
Adj Flow Rate, veh/h	95	11	16	5	0	11	16	585	11	16	548	89
Peak Hour Factor	0.95	0.95	0.95	0.95	0.95	0.95	0.95	0.95	0.95	0.95	0.95	0.95
Percent Heavy Veh, %	3	3	3	23	23	23	16	16	16	15	15	15
Cap, veh/h	224	17	21	299	0	267	289	774	15	267	799	677
Arrive On Green	0.11	0.11	0.11	0.00	0.00	0.20	0.01	0.48	0.48	0.01	0.48	0.48
Sat Flow, veh/h	1103	156	190	1485	0	1321	1584	1626	31	1598	1678	1422
Grp Volume(v), veh/h	122	0	0	5	0	11	16	0	596	16	548	89
Grp Sat Flow(s),veh/h/ln	1449	0	0	1485	0	1321	1584	0	1657	1598	1678	1422
Q Serve(g_s), s	5.0	0.0	0.0	0.2	0.0	0.4	0.3	0.0	18.5	0.3	16.0	2.2
Cycle Q Clear(g_c), s	5.1	0.0	0.0	0.2	0.0	0.4	0.3	0.0	18.5	0.3	16.0	2.2
Prop In Lane	0.78		0.13	1.00		1.00	1.00		0.02	1.00		1.00
Lane Grp Cap(c), veh/h	262	0	0	299	0	267	289	0	789	267	799	677
V/C Ratio(X)	0.47	0.00	0.00	0.02	0.00	0.04	0.06	0.00	0.76	0.06	0.69	0.13
Avail Cap(c_a), veh/h	519	0	0	636	0	928	889	0	1528	745	1413	1198
HCM Platoon Ratio	1.00	1.00	1.00	1.00	1.00	1.00	1.00	1.00	1.00	1.00	1.00	1.00
Upstream Filter(I)	1.00	0.00	0.00	1.00	0.00	1.00	1.00	0.00	1.00	1.00	1.00	1.00
Uniform Delay (d), s/veh	27.1	0.0	0.0	23.0	0.0	20.2	10.4	0.0	13.5	11.1	12.8	9.2
Incr Delay (d2), s/veh	1.8	0.0	0.0	0.0	0.0	0.1	0.1	0.0	3.2	0.1	2.2	0.2
Initial Q Delay(d3),s/veh	0.0	0.0	0.0	0.0	0.0	0.0	0.0	0.0	0.0	0.0	0.0	0.0
%ile BackOfQ(50%),veh/ln	1.8	0.0	0.0	0.1	0.0	0.1	0.1	0.0	6.5	0.1	5.6	0.6
Unsig. Movement Delay, s/veh												
LnGrp Delay(d),s/veh	29.0	0.0	0.0	23.0	0.0	20.3	10.5	0.0	16.6	11.2	15.0	9.4
LnGrp LOS	C	A	A	C	A	C	B	A	B	B	B	A
Approach Vol, veh/h		122			16			612			653	
Approach Delay, s/veh		29.0			21.1			16.5			14.2	
Approach LOS		C			C			B			B	

Timer - Assigned Phs	1	2	3	4	5	6		8
Phs Duration (G+Y+Rc), s	6.2	37.0	5.8	13.8	6.2	37.0		19.6
Change Period (Y+Rc), s	5.5	7.1	5.5	6.9	5.5	7.1		* 6.9
Max Green Setting (Gmax), s	19.5	57.9	14.5	18.1	24.5	52.9		* 44
Max Q Clear Time (g_c+I1), s	2.3	20.5	2.2	7.1	2.3	18.0		2.4
Green Ext Time (p_c), s	0.0	9.4	0.0	0.5	0.0	9.1		0.0

Intersection Summary	
HCM 6th Ctrl Delay	16.5
HCM 6th LOS	B

Notes

* HCM 6th computational engine requires equal clearance times for the phases crossing the barrier.

Movement	EBL	EBT	EBR	WBL	WBT	WBR	NBL	NBT	NBR	SBL	SBT	SBR
Lane Configurations												
Traffic Volume (veh/h)	340	612	65	10	556	130	65	40	15	144	40	335
Future Volume (veh/h)	340	612	65	10	556	130	65	40	15	144	40	335
Initial Q (Qb), veh	0	0	0	0	0	0	0	0	0	0	0	0
Ped-Bike Adj(A_pbT)	1.00		1.00	1.00		1.00	1.00		0.99	1.00		0.99
Parking Bus, Adj	1.00	1.00	1.00	1.00	1.00	1.00	1.00	1.00	1.00	1.00	1.00	1.00
Work Zone On Approach		No			No			No			No	
Adj Sat Flow, veh/h/ln	1767	1767	1767	1767	1767	1767	1885	1885	1885	1826	1826	1826
Adj Flow Rate, veh/h	351	631	67	10	573	134	67	41	15	148	41	345
Peak Hour Factor	0.97	0.97	0.97	0.97	0.97	0.97	0.97	0.97	0.97	0.97	0.97	0.97
Percent Heavy Veh, %	9	9	9	9	9	9	1	1	1	5	5	5
Cap, veh/h	383	1930	859	16	1197	533	86	201	74	175	376	669
Arrive On Green	0.23	0.57	0.57	0.01	0.36	0.36	0.05	0.15	0.15	0.10	0.21	0.21
Sat Flow, veh/h	1682	3357	1495	1682	3357	1493	1795	1314	481	1739	1826	1538
Grp Volume(v), veh/h	351	631	67	10	573	134	67	0	56	148	41	345
Grp Sat Flow(s),veh/h/ln	1682	1678	1495	1682	1678	1493	1795	0	1794	1739	1826	1538
Q Serve(g_s), s	25.1	12.2	2.5	0.7	16.4	7.8	4.6	0.0	3.4	10.3	2.3	20.2
Cycle Q Clear(g_c), s	25.1	12.2	2.5	0.7	16.4	7.8	4.6	0.0	3.4	10.3	2.3	20.2
Prop In Lane	1.00		1.00	1.00		1.00	1.00		0.27	1.00		1.00
Lane Grp Cap(c), veh/h	383	1930	859	16	1197	533	86	0	274	175	376	669
V/C Ratio(X)	0.92	0.33	0.08	0.63	0.48	0.25	0.78	0.00	0.20	0.84	0.11	0.52
Avail Cap(c_a), veh/h	572	1930	859	54	1197	533	160	0	523	268	651	900
HCM Platoon Ratio	1.00	1.00	1.00	1.00	1.00	1.00	1.00	1.00	1.00	1.00	1.00	1.00
Upstream Filter(I)	1.00	1.00	1.00	1.00	1.00	1.00	1.00	0.00	1.00	1.00	1.00	1.00
Uniform Delay (d), s/veh	46.6	13.7	11.7	61.0	30.8	28.1	58.1	0.0	45.7	54.6	39.9	25.6
Incr Delay (d2), s/veh	14.7	0.5	0.2	34.9	1.4	1.1	13.8	0.0	0.4	13.9	0.1	0.6
Initial Q Delay(d3),s/veh	0.0	0.0	0.0	0.0	0.0	0.0	0.0	0.0	0.0	0.0	0.0	0.0
%ile BackOfQ(50%),veh/ln	12.0	4.7	0.9	0.5	6.9	3.0	2.4	0.0	1.5	5.2	1.0	7.5
Unsig. Movement Delay, s/veh												
LnGrp Delay(d),s/veh	61.2	14.2	11.9	95.8	32.2	29.2	71.9	0.0	46.1	68.5	40.0	26.2
LnGrp LOS	E	B	B	F	C	C	E	A	D	E	D	C
Approach Vol, veh/h		1049			717			123			534	
Approach Delay, s/veh		29.8			32.5			60.1			39.0	
Approach LOS		C			C			E			D	

Timer - Assigned Phs	1	2	3	4	5	6	7	8
Phs Duration (G+Y+Rc), s	6.2	76.0	10.9	30.4	33.1	49.1	17.4	23.9
Change Period (Y+Rc), s	5.0	5.0	5.0	5.0	5.0	5.0	5.0	5.0
Max Green Setting (Gmax), s	4.0	71.0	11.0	44.0	42.0	33.0	19.0	36.0
Max Q Clear Time (g_c+I1), s	2.7	14.2	6.6	22.2	27.1	18.4	12.3	5.4
Green Ext Time (p_c), s	0.0	5.4	0.0	1.4	1.0	3.8	0.2	0.3

Intersection Summary	
HCM 6th Ctrl Delay	34.2
HCM 6th LOS	C

Movement	EBT	EBR	WBL	WBT	NBL	NBR
Lane Configurations						
Traffic Volume (veh/h)	718	411	225	726	492	299
Future Volume (veh/h)	718	411	225	726	492	299
Initial Q (Qb), veh	0	0	0	0	0	0
Ped-Bike Adj(A_pbT)		1.00	1.00		1.00	1.00
Parking Bus, Adj	1.00	1.00	1.00	1.00	1.00	1.00
Work Zone On Approach	No			No	No	
Adj Sat Flow, veh/h/ln	1737	1737	1722	1722	1856	1856
Adj Flow Rate, veh/h	740	0	232	748	507	308
Peak Hour Factor	0.97	0.97	0.97	0.97	0.97	0.97
Percent Heavy Veh, %	11	11	12	12	3	3
Cap, veh/h	2704		259	2522	519	486
Arrive On Green	0.57	0.00	0.16	0.77	0.15	0.15
Sat Flow, veh/h	4898	1472	1640	3358	3428	1572
Grp Volume(v), veh/h	740	0	232	748	507	308
Grp Sat Flow(s),veh/h/ln	1581	1472	1640	1636	1714	1572
Q Serve(g_s), s	11.9	0.0	20.8	10.2	22.1	22.7
Cycle Q Clear(g_c), s	11.9	0.0	20.8	10.2	22.1	22.7
Prop In Lane		1.00	1.00		1.00	1.00
Lane Grp Cap(c), veh/h	2704		259	2522	519	486
V/C Ratio(X)	0.27		0.90	0.30	0.98	0.63
Avail Cap(c_a), veh/h	2704		477	2522	519	486
HCM Platoon Ratio	1.00	1.00	1.00	1.00	1.00	1.00
Upstream Filter(I)	1.00	0.00	0.93	0.93	1.00	1.00
Uniform Delay (d), s/veh	16.4	0.0	62.0	5.1	63.4	44.5
Incr Delay (d2), s/veh	0.3	0.0	11.7	0.3	33.7	3.1
Initial Q Delay(d3),s/veh	0.0	0.0	0.0	0.0	0.0	0.0
%ile BackOfQ(50%),veh/ln	4.5	0.0	9.5	3.3	12.1	10.3
Unsig. Movement Delay, s/veh						
LnGrp Delay(d),s/veh	16.7	0.0	73.7	5.4	97.0	47.6
LnGrp LOS	B		E	A	F	D
Approach Vol, veh/h	740	A		980	815	
Approach Delay, s/veh	16.7			21.6	78.4	
Approach LOS	B			C	E	

Timer - Assigned Phs	1	2				6	8
Phs Duration (G+Y+Rc), s	30.1	91.9				122.0	28.0
Change Period (Y+Rc), s	6.4	6.4				6.4	5.3
Max Green Setting (Gmax), s	43.6	65.6				115.6	22.7
Max Q Clear Time (g_c+I1), s	22.8	13.9				12.2	24.7
Green Ext Time (p_c), s	0.8	12.5				13.9	0.0

Intersection Summary	
HCM 6th Ctrl Delay	38.4
HCM 6th LOS	D

Notes

User approved pedestrian interval to be less than phase max green.

Unsignalized Delay for [EBR] is excluded from calculations of the approach delay and intersection delay.

Movement	EBL	EBT	EBR	WBL	WBT	WBR	NBL	NBT	NBR	SBL	SBT	SBR
Lane Configurations												
Traffic Volume (vph)	130	762	0	0	991	496	0	0	396	0	0	637
Future Volume (vph)	130	762	0	0	991	496	0	0	396	0	0	637
Ideal Flow (vphpl)	1900	1900	1900	1900	1900	1900	1900	1900	1900	1900	1900	1900
Total Lost time (s)	5.0	5.0			5.0	5.0			4.0			5.0
Lane Util. Factor	1.00	0.95			0.95	1.00			1.00			1.00
Frpb, ped/bikes	1.00	1.00			1.00	1.00			1.00			1.00
Flpb, ped/bikes	1.00	1.00			1.00	1.00			1.00			1.00
Frt	1.00	1.00			1.00	0.85			0.86			0.86
Flt Protected	0.95	1.00			1.00	1.00			1.00			1.00
Satd. Flow (prot)	1687	3374			3374	1509			1508			1596
Flt Permitted	0.95	1.00			1.00	1.00			1.00			1.00
Satd. Flow (perm)	1687	3374			3374	1509			1508			1596
Peak-hour factor, PHF	0.96	0.96	0.96	0.96	0.96	0.96	0.96	0.96	0.96	0.96	0.96	0.96
Adj. Flow (vph)	135	794	0	0	1032	517	0	0	412	0	0	664
RTOR Reduction (vph)	0	0	0	0	0	0	0	0	0	0	0	36
Lane Group Flow (vph)	135	794	0	0	1032	517	0	0	413	0	0	628
Confl. Peds. (#/hr)	4					4						
Heavy Vehicles (%)	7%	7%	7%	7%	7%	7%	9%	9%	9%	3%	3%	3%
Turn Type	Prot	NA			NA	custom			Free			pt+ov
Protected Phases	1!	1 6 8			6	4 6 8!						1 8
Permitted Phases									Free			8 1
Actuated Green, G (s)	34.5	100.0			55.5	100.0			100.0			34.5
Effective Green, g (s)	34.5	100.0			55.5	100.0			100.0			34.5
Actuated g/C Ratio	0.34	1.00			0.56	1.00			1.00			0.34
Clearance Time (s)	5.0				5.0							
Vehicle Extension (s)	2.0				2.0							
Lane Grp Cap (vph)	582	3374			1872	1509			1508			550
v/s Ratio Prot	0.08	0.24			c0.31	0.34						c0.39
v/s Ratio Perm									0.27			
v/c Ratio	0.23	0.24			0.55	0.34			0.27			1.14
Uniform Delay, d1	23.3	0.0			14.3	0.0			0.0			32.8
Progression Factor	0.76	1.00			1.00	1.00			1.00			1.00
Incremental Delay, d2	0.8	0.0			1.2	0.0			0.4			83.9
Delay (s)	18.4	0.0			15.4	0.0			0.4			116.6
Level of Service	B	A			B	A			A			F
Approach Delay (s)		2.7			10.3			0.4			116.6	
Approach LOS		A			B			A			F	

Intersection Summary			
HCM 2000 Control Delay	27.0	HCM 2000 Level of Service	C
HCM 2000 Volume to Capacity ratio	0.80		
Actuated Cycle Length (s)	100.0	Sum of lost time (s)	13.0
Intersection Capacity Utilization	75.2%	ICU Level of Service	D
Analysis Period (min)	15		

! Phase conflict between lane groups.
c Critical Lane Group

Movement	EBL	EBT	EBR	WBL	WBT	WBR	NBL	NBT	NBR	SBL	SBT	SBR
Lane Configurations												
Traffic Volume (vph)	496	340	75	434	320	874	0	0	0	557	694	435
Future Volume (vph)	496	340	75	434	320	874	0	0	0	557	694	435
Ideal Flow (vphpl)	1900	1900	1900	1900	1900	1900	1900	1900	1900	1900	1900	1900
Total Lost time (s)	5.0	5.0		9.0	9.0	4.0				5.0	5.0	5.0
Lane Util. Factor	0.97	0.95		1.00	0.95	1.00				0.97	0.95	0.95
Frt	1.00	0.97		1.00	1.00	0.85				1.00	1.00	0.85
Flt Protected	0.95	1.00		0.95	1.00	1.00				0.95	1.00	1.00
Satd. Flow (prot)	3400	3409		1687	3374	1509				3273	1687	1434
Flt Permitted	0.95	1.00		0.95	1.00	1.00				0.95	1.00	1.00
Satd. Flow (perm)	3400	3409		1687	3374	1509				3273	1687	1434
Peak-hour factor, PHF	0.98	0.98	0.98	0.98	0.98	0.98	0.98	0.98	0.98	0.98	0.98	0.98
Adj. Flow (vph)	506	347	77	443	327	892	0	0	0	568	708	444
RTOR Reduction (vph)	0	19	0	0	0	6	0	0	0	0	0	0
Lane Group Flow (vph)	506	405	0	443	327	886	0	0	0	568	708	444
Heavy Vehicles (%)	3%	3%	3%	7%	7%	7%	0%	0%	0%	7%	7%	7%
Turn Type	Split	NA		Split	NA	custom				Split	NA	custom
Protected Phases	2	2		3	3	7				4	4	4 5
Permitted Phases						7						
Actuated Green, G (s)	18.0	18.0		28.8	28.8	73.0				34.2	34.2	57.2
Effective Green, g (s)	18.0	18.0		28.8	28.8	73.0				34.2	34.2	57.2
Actuated g/C Ratio	0.18	0.18		0.29	0.29	0.73				0.34	0.34	0.57
Clearance Time (s)	5.0	5.0		9.0	9.0	4.0				5.0	5.0	
Vehicle Extension (s)	4.0	4.0		3.0	3.0	3.0				3.0	3.0	
Lane Grp Cap (vph)	612	613		485	971	1101				1119	576	820
v/s Ratio Prot	c0.15	0.12		0.26	0.10	c0.59				0.17	c0.42	0.31
v/s Ratio Perm												
v/c Ratio	0.83	0.66		0.91	0.34	0.80				0.51	1.23	0.54
Uniform Delay, d1	39.5	38.2		34.4	28.1	8.8				26.2	32.9	13.3
Progression Factor	1.00	1.00		0.76	0.72	1.42				0.54	0.56	0.48
Incremental Delay, d2	12.1	5.5		16.7	0.1	3.1				0.3	113.8	0.5
Delay (s)	51.6	43.7		43.0	20.4	15.7				14.4	132.3	6.9
Level of Service	D	D		D	C	B				B	F	A
Approach Delay (s)		48.0			23.9			0.0			61.0	
Approach LOS		D			C			A			E	

Intersection Summary			
HCM 2000 Control Delay	43.9	HCM 2000 Level of Service	D
HCM 2000 Volume to Capacity ratio	1.05		
Actuated Cycle Length (s)	100.0	Sum of lost time (s)	19.0
Intersection Capacity Utilization	97.0%	ICU Level of Service	F
Analysis Period (min)	15		
c Critical Lane Group			

Movement	EBL	EBT	EBR	WBL	WBT	WBR	NBL	NBT	NBR	SBL	SBT	SBR
Lane Configurations												
Traffic Volume (veh/h)	180	255	145	781	190	206	90	595	685	181	740	90
Future Volume (veh/h)	180	255	145	781	190	206	90	595	685	181	740	90
Initial Q (Qb), veh	0	0	0	0	0	0	0	0	0	0	0	0
Ped-Bike Adj(A_pbT)	1.00		1.00	1.00		1.00	1.00		1.00	1.00		1.00
Parking Bus, Adj	1.00	1.00	1.00	1.00	1.00	1.00	1.00	1.00	1.00	1.00	1.00	1.00
Work Zone On Approach		No			No			No			No	
Adj Sat Flow, veh/h/ln	1856	1856	1856	1856	1856	1856	1841	1841	1841	1767	1767	1767
Adj Flow Rate, veh/h	150	314	0	736	292	0	93	613	0	187	763	0
Peak Hour Factor	0.97	0.97	0.97	0.97	0.97	0.97	0.97	0.97	0.97	0.97	0.97	0.97
Percent Heavy Veh, %	3	3	3	3	3	3	4	4	4	9	9	9
Cap, veh/h	256	537		968	508		120	905		339	1557	
Arrive On Green	0.14	0.14	0.00	0.09	0.09	0.00	0.02	0.06	0.00	0.20	0.32	0.00
Sat Flow, veh/h	1767	3711	1572	3534	1856	1572	1753	5025	1560	1682	4823	1497
Grp Volume(v), veh/h	150	314	0	736	292	0	93	613	0	187	763	0
Grp Sat Flow(s),veh/h/ln	1767	1856	1572	1767	1856	1572	1753	1675	1560	1682	1608	1497
Q Serve(g_s), s	7.9	7.9	0.0	20.3	15.1	0.0	5.3	12.0	0.0	10.0	12.7	0.0
Cycle Q Clear(g_c), s	7.9	7.9	0.0	20.3	15.1	0.0	5.3	12.0	0.0	10.0	12.7	0.0
Prop In Lane	1.00		1.00	1.00		1.00	1.00		1.00	1.00		1.00
Lane Grp Cap(c), veh/h	256	537		968	508		120	905		339	1557	
V/C Ratio(X)	0.59	0.59		0.76	0.57		0.77	0.68		0.55	0.49	
Avail Cap(c_a), veh/h	300	631		990	520		210	905		339	1557	
HCM Platoon Ratio	1.00	1.00	1.00	0.33	0.33	0.33	0.33	0.33	0.33	1.00	1.00	1.00
Upstream Filter(I)	1.00	1.00	0.00	0.87	0.87	0.00	0.48	0.48	0.00	1.00	1.00	0.00
Uniform Delay (d), s/veh	40.0	40.0	0.0	42.3	39.9	0.0	48.1	44.2	0.0	35.9	27.2	0.0
Incr Delay (d2), s/veh	9.5	4.6	0.0	4.4	3.3	0.0	7.1	2.0	0.0	2.5	1.1	0.0
Initial Q Delay(d3),s/veh	0.0	0.0	0.0	0.0	0.0	0.0	0.0	0.0	0.0	0.0	0.0	0.0
%ile BackOfQ(50%),veh/ln	4.1	3.9	0.0	10.2	7.9	0.0	2.6	5.5	0.0	4.3	5.0	0.0
Unsig. Movement Delay, s/veh												
LnGrp Delay(d),s/veh	49.5	44.6	0.0	46.7	43.2	0.0	55.2	46.2	0.0	38.3	28.3	0.0
LnGrp LOS	D	D		D	D		E	D		D	C	
Approach Vol, veh/h		464	A		1028	A		706	A		950	A
Approach Delay, s/veh		46.2			45.7			47.4			30.3	
Approach LOS		D			D			D			C	

Timer - Assigned Phs		2	3	4		6	7	8				
Phs Duration (G+Y+Rc), s		32.4	10.8	37.3		19.5	25.1	23.0				
Change Period (Y+Rc), s		5.0	4.0	5.0		5.0	5.0	* 5				
Max Green Setting (Gmax), s		28.0	12.0	24.0		17.0	18.0	* 18				
Max Q Clear Time (g_c+I1), s		22.3	7.3	14.7		9.9	12.0	14.0				
Green Ext Time (p_c), s		5.1	0.1	6.2		4.5	0.4	2.2				

Intersection Summary	
HCM 6th Ctrl Delay	41.5
HCM 6th LOS	D

Notes

User approved pedestrian interval to be less than phase max green.

User approved volume balancing among the lanes for turning movement.

* HCM 6th computational engine requires equal clearance times for the phases crossing the barrier.

Movement	EBL	EBT	EBR	WBL	WBT	WBR	NBL	NBT	NBR	SBL	SBT	SBR
Lane Configurations												
Traffic Volume (veh/h)	75	1051	5	5	1082	5	10	0	5	10	0	85
Future Volume (veh/h)	75	1051	5	5	1082	5	10	0	5	10	0	85
Initial Q (Qb), veh	0	0	0	0	0	0	0	0	0	0	0	0
Ped-Bike Adj(A_pbT)	1.00		1.00	1.00		1.00	1.00		1.00	1.00		1.00
Parking Bus, Adj	1.00	1.00	1.00	1.00	1.00	1.00	1.00	1.00	1.00	1.00	1.00	1.00
Work Zone On Approach		No			No			No			No	
Adj Sat Flow, veh/h/ln	1841	1841	1841	1870	1870	1870	1900	1900	1900	1826	1826	1826
Adj Flow Rate, veh/h	77	1084	5	5	1115	5	10	0	5	10	0	88
Peak Hour Factor	0.97	0.97	0.97	0.97	0.97	0.97	0.97	0.97	0.97	0.97	0.97	0.97
Percent Heavy Veh, %	4	4	4	2	2	2	0	0	0	5	5	5
Cap, veh/h	99	2574	12	9	2431	11	159	0	111	172	0	117
Arrive On Green	0.07	0.96	0.96	0.01	0.67	0.67	0.08	0.00	0.08	0.08	0.00	0.08
Sat Flow, veh/h	1753	3570	16	1781	3628	16	1155	0	1465	1320	0	1547
Grp Volume(v), veh/h	77	531	558	5	546	574	10	0	5	10	0	88
Grp Sat Flow(s),veh/h/ln	1753	1749	1838	1781	1777	1867	1155	0	1465	1320	0	1547
Q Serve(g_s), s	4.3	2.1	2.1	0.3	14.6	14.6	0.7	0.0	0.3	0.7	0.0	5.6
Cycle Q Clear(g_c), s	4.3	2.1	2.1	0.3	14.6	14.6	1.7	0.0	0.3	1.0	0.0	5.6
Prop In Lane	1.00		0.01	1.00		0.01	1.00		1.00	1.00		1.00
Lane Grp Cap(c), veh/h	99	1261	1325	9	1190	1251	159	0	111	172	0	117
V/C Ratio(X)	0.78	0.42	0.42	0.54	0.46	0.46	0.06	0.00	0.05	0.06	0.00	0.75
Avail Cap(c_a), veh/h	200	1261	1325	78	1190	1251	343	0	314	362	0	331
HCM Platoon Ratio	1.33	1.33	1.33	1.00	1.00	1.00	1.00	1.00	1.00	1.00	1.00	1.00
Upstream Filter(I)	0.55	0.55	0.55	1.00	1.00	1.00	1.00	0.00	1.00	1.00	0.00	1.00
Uniform Delay (d), s/veh	45.6	0.6	0.6	49.6	7.9	7.9	44.0	0.0	42.9	43.3	0.0	45.3
Incr Delay (d2), s/veh	7.1	0.6	0.5	41.4	1.3	1.2	0.2	0.0	0.2	0.2	0.0	12.8
Initial Q Delay(d3),s/veh	0.0	0.0	0.0	0.0	0.0	0.0	0.0	0.0	0.0	0.0	0.0	0.0
%ile BackOfQ(50%),veh/ln	2.0	0.6	0.6	0.2	5.2	5.5	0.2	0.0	0.1	0.2	0.0	2.6
Unsig. Movement Delay, s/veh												
LnGrp Delay(d),s/veh	52.8	1.2	1.2	91.0	9.1	9.1	44.2	0.0	43.1	43.5	0.0	58.1
LnGrp LOS	D	A	A	F	A	A	D	A	D	D	A	E
Approach Vol, veh/h		1166			1125			15			98	
Approach Delay, s/veh		4.6			9.5			43.8			56.7	
Approach LOS		A			A			D			E	

Timer - Assigned Phs	1	2		4	5	6		8
Phs Duration (G+Y+Rc), s	12.2	73.6		14.2	7.1	78.7		14.2
Change Period (Y+Rc), s	6.6	6.6		6.6	6.6	6.6		6.6
Max Green Setting (Gmax), s	11.4	47.4		21.4	4.4	54.4		21.4
Max Q Clear Time (g_c+I1), s	6.3	16.6		3.7	2.3	4.1		7.6
Green Ext Time (p_c), s	0.1	29.0		0.0	0.0	11.9		0.3

Intersection Summary	
HCM 6th Ctrl Delay	9.2
HCM 6th LOS	A

Movement	EBL	EBT	EBR	WBL	WBT	WBR	NBL	NBT	NBR	SBL	SBT	SBR
Lane Configurations												
Traffic Volume (veh/h)	10	981	70	35	977	5	85	10	35	5	5	25
Future Volume (veh/h)	10	981	70	35	977	5	85	10	35	5	5	25
Initial Q (Qb), veh	0	0	0	0	0	0	0	0	0	0	0	0
Ped-Bike Adj(A_pbT)	1.00		1.00	1.00		1.00	1.00		1.00	1.00		0.99
Parking Bus, Adj	1.00	1.00	1.00	1.00	1.00	1.00	1.00	1.00	1.00	1.00	1.00	1.00
Work Zone On Approach		No			No			No			No	
Adj Sat Flow, veh/h/ln	1841	1841	1841	1811	1811	1811	1841	1841	1841	1900	1900	1900
Adj Flow Rate, veh/h	11	1044	74	37	1039	5	90	11	37	5	5	27
Peak Hour Factor	0.94	0.94	0.94	0.94	0.94	0.94	0.94	0.94	0.94	0.94	0.94	0.94
Percent Heavy Veh, %	4	4	4	6	6	6	4	4	4	0	0	0
Cap, veh/h	672	2224	158	55	1089	5	130	27	92	58	8	44
Arrive On Green	0.38	0.67	0.67	0.02	0.21	0.21	0.07	0.07	0.07	0.03	0.03	0.03
Sat Flow, veh/h	1753	3312	235	1725	3512	17	1753	369	1242	1810	256	1385
Grp Volume(v), veh/h	11	551	567	37	509	535	90	0	48	5	0	32
Grp Sat Flow(s),veh/h/ln	1753	1749	1798	1725	1721	1808	1753	0	1611	1810	0	1641
Q Serve(g_s), s	0.4	15.1	15.1	2.1	29.2	29.2	5.0	0.0	2.8	0.3	0.0	1.9
Cycle Q Clear(g_c), s	0.4	15.1	15.1	2.1	29.2	29.2	5.0	0.0	2.8	0.3	0.0	1.9
Prop In Lane	1.00		0.13	1.00		0.01	1.00		0.77	1.00		0.84
Lane Grp Cap(c), veh/h	672	1174	1208	55	533	560	130	0	120	58	0	53
V/C Ratio(X)	0.02	0.47	0.47	0.67	0.95	0.95	0.69	0.00	0.40	0.09	0.00	0.61
Avail Cap(c_a), veh/h	672	1174	1208	241	533	560	316	0	290	326	0	295
HCM Platoon Ratio	1.00	1.00	1.00	0.67	0.67	0.67	1.00	1.00	1.00	1.00	1.00	1.00
Upstream Filter(I)	1.00	1.00	1.00	0.93	0.93	0.93	1.00	0.00	1.00	1.00	0.00	1.00
Uniform Delay (d), s/veh	19.1	7.9	7.9	48.4	38.9	38.9	45.2	0.0	44.2	47.0	0.0	47.8
Incr Delay (d2), s/veh	0.0	1.3	1.3	12.2	27.9	27.0	8.9	0.0	3.1	0.9	0.0	15.0
Initial Q Delay(d3),s/veh	0.0	0.0	0.0	0.0	0.0	0.0	0.0	0.0	0.0	0.0	0.0	0.0
%ile BackOfQ(50%),veh/ln	0.2	5.3	5.4	1.1	16.8	17.5	2.5	0.0	1.2	0.1	0.0	1.0
Unsig. Movement Delay, s/veh												
LnGrp Delay(d),s/veh	19.1	9.2	9.2	60.5	66.8	65.9	54.1	0.0	47.2	47.9	0.0	62.8
LnGrp LOS	B	A	A	E	E	E	D	A	D	D	A	E
Approach Vol, veh/h		1129			1081			138			37	
Approach Delay, s/veh		9.3			66.1			51.7			60.8	
Approach LOS		A			E			D			E	

Timer - Assigned Phs	1	2		4	5	6		8
Phs Duration (G+Y+Rc), s	43.4	36.0		12.4	7.2	72.1		8.2
Change Period (Y+Rc), s	5.0	* 5		5.0	4.0	5.0		5.0
Max Green Setting (Gmax), s	14.0	* 31		18.0	14.0	31.0		18.0
Max Q Clear Time (g_c+I1), s	2.4	31.2		7.0	4.1	17.1		3.9
Green Ext Time (p_c), s	0.0	0.0		0.4	0.0	11.5		0.1

Intersection Summary	
HCM 6th Ctrl Delay	38.3
HCM 6th LOS	D

Notes

User approved pedestrian interval to be less than phase max green.

* HCM 6th computational engine requires equal clearance times for the phases crossing the barrier.

Movement	EBL	EBT	EBR	WBL	WBT	WBR	NBL	NBT	NBR	SBL	SBT	SBR
Lane Configurations												
Traffic Volume (veh/h)	25	950	41	26	930	45	52	5	26	60	5	30
Future Volume (veh/h)	25	950	41	26	930	45	52	5	26	60	5	30
Initial Q (Qb), veh	0	0	0	0	0	0	0	0	0	0	0	0
Ped-Bike Adj(A_pbT)	1.00		1.00	1.00		1.00	1.00		1.00	1.00		1.00
Parking Bus, Adj	1.00	1.00	1.00	1.00	1.00	1.00	1.00	1.00	1.00	1.00	1.00	1.00
Work Zone On Approach		No			No			No			No	
Adj Sat Flow, veh/h/ln	1856	1856	1856	1870	1870	1870	1470	1470	1470	1826	1826	1826
Adj Flow Rate, veh/h	26	990	43	27	969	47	54	5	27	62	5	31
Peak Hour Factor	0.96	0.96	0.96	0.96	0.96	0.96	0.96	0.96	0.96	0.96	0.96	0.96
Percent Heavy Veh, %	3	3	3	2	2	2	29	29	29	5	5	5
Cap, veh/h	45	2420	105	47	2427	118	117	17	35	220	15	241
Arrive On Green	0.05	1.00	1.00	0.03	0.70	0.70	0.13	0.13	0.13	0.13	0.13	0.13
Sat Flow, veh/h	1767	3442	149	1781	3450	167	449	128	264	1155	116	1544
Grp Volume(v), veh/h	26	507	526	27	499	517	86	0	0	67	0	31
Grp Sat Flow(s),veh/h/ln	1767	1763	1829	1781	1777	1840	842	0	0	1271	0	1544
Q Serve(g_s), s	1.4	0.0	0.0	1.5	11.6	11.6	5.9	0.0	0.0	0.0	0.0	1.7
Cycle Q Clear(g_c), s	1.4	0.0	0.0	1.5	11.6	11.6	10.8	0.0	0.0	4.9	0.0	1.7
Prop In Lane	1.00		0.08	1.00		0.09	0.63		0.31	0.93		1.00
Lane Grp Cap(c), veh/h	45	1239	1285	47	1250	1295	169	0	0	235	0	241
V/C Ratio(X)	0.57	0.41	0.41	0.57	0.40	0.40	0.51	0.00	0.00	0.28	0.00	0.13
Avail Cap(c_a), veh/h	194	1239	1285	338	1250	1295	259	0	0	344	0	364
HCM Platoon Ratio	2.00	2.00	2.00	1.00	1.00	1.00	1.00	1.00	1.00	1.00	1.00	1.00
Upstream Filter(I)	0.86	0.86	0.86	1.00	1.00	1.00	1.00	0.00	0.00	1.00	0.00	1.00
Uniform Delay (d), s/veh	46.9	0.0	0.0	48.1	6.1	6.1	43.5	0.0	0.0	39.9	0.0	36.3
Incr Delay (d2), s/veh	9.4	0.9	0.8	10.6	1.0	0.9	2.4	0.0	0.0	0.7	0.0	0.2
Initial Q Delay(d3),s/veh	0.0	0.0	0.0	0.0	0.0	0.0	0.0	0.0	0.0	0.0	0.0	0.0
%ile BackOfQ(50%),veh/ln	0.7	0.3	0.3	0.8	3.9	4.0	2.2	0.0	0.0	1.6	0.0	0.7
Unsig. Movement Delay, s/veh												
LnGrp Delay(d),s/veh	56.3	0.9	0.8	58.7	7.1	7.0	45.9	0.0	0.0	40.5	0.0	36.6
LnGrp LOS	E	A	A	E	A	A	D	A	A	D	A	D
Approach Vol, veh/h		1059			1043			86			98	
Approach Delay, s/veh		2.2			8.4			45.9			39.3	
Approach LOS		A			A			D			D	

Timer - Assigned Phs	1	2		4	5	6		8
Phs Duration (G+Y+Rc), s	6.6	75.4		18.1	6.6	75.3		18.1
Change Period (Y+Rc), s	4.0	5.0		5.0	4.0	5.0		5.0
Max Green Setting (Gmax), s	11.0	54.0		21.0	19.0	46.0		21.0
Max Q Clear Time (g_c+I1), s	3.4	13.6		6.9	3.5	2.0		12.8
Green Ext Time (p_c), s	0.0	27.5		0.2	0.0	32.9		0.1

Intersection Summary	
HCM 6th Ctrl Delay	8.3
HCM 6th LOS	A

Notes

User approved pedestrian interval to be less than phase max green.

Movement	EBL	EBT	EBR	WBL	WBT	WBR	NBL	NBT	NBR	SBL	SBT	SBR
Lane Configurations												
Traffic Volume (veh/h)	15	987	10	5	936	15	10	0	10	15	0	10
Future Volume (veh/h)	15	987	10	5	936	15	10	0	10	15	0	10
Initial Q (Qb), veh	0	0	0	0	0	0	0	0	0	0	0	0
Ped-Bike Adj(A_pbT)	1.00		1.00	1.00		1.00	1.00		1.00	1.00		1.00
Parking Bus, Adj	1.00	1.00	1.00	1.00	1.00	1.00	1.00	1.00	1.00	1.00	1.00	1.00
Work Zone On Approach		No			No			No			No	
Adj Sat Flow, veh/h/ln	1781	1781	1781	1796	1796	1796	1781	1781	1781	1826	1826	1826
Adj Flow Rate, veh/h	16	1073	11	5	1017	16	11	0	11	16	0	11
Peak Hour Factor	0.92	0.92	0.92	0.92	0.92	0.92	0.92	0.92	0.92	0.92	0.92	0.92
Percent Heavy Veh, %	8	8	8	7	7	7	8	8	8	5	5	5
Cap, veh/h	34	1977	882	11	1948	869	148	0	64	148	0	65
Arrive On Green	0.02	0.58	0.58	0.01	0.57	0.57	0.04	0.00	0.04	0.04	0.00	0.04
Sat Flow, veh/h	1697	3385	1510	1711	3413	1522	0	0	1510	0	0	1547
Grp Volume(v), veh/h	16	1073	11	5	1017	16	11	0	11	16	0	11
Grp Sat Flow(s),veh/h/ln	1697	1692	1510	1711	1706	1522	0	0	1510	0	0	1547
Q Serve(g_s), s	0.5	9.4	0.1	0.1	8.8	0.2	0.0	0.0	0.3	0.0	0.0	0.3
Cycle Q Clear(g_c), s	0.5	9.4	0.1	0.1	8.8	0.2	2.1	0.0	0.3	2.1	0.0	0.3
Prop In Lane	1.00		1.00	1.00		1.00	1.00		1.00	1.00		1.00
Lane Grp Cap(c), veh/h	34	1977	882	11	1948	869	148	0	64	148	0	65
V/C Ratio(X)	0.47	0.54	0.01	0.44	0.52	0.02	0.07	0.00	0.17	0.11	0.00	0.17
Avail Cap(c_a), veh/h	175	3014	1344	176	3039	1356	946	0	965	599	0	574
HCM Platoon Ratio	1.00	1.00	1.00	1.00	1.00	1.00	1.00	1.00	1.00	1.00	1.00	1.00
Upstream Filter(I)	1.00	1.00	1.00	1.00	1.00	1.00	1.00	0.00	1.00	1.00	0.00	1.00
Uniform Delay (d), s/veh	23.5	6.1	4.2	24.0	6.4	4.5	24.3	0.0	22.4	24.3	0.0	22.4
Incr Delay (d2), s/veh	9.8	0.5	0.0	23.8	0.5	0.0	0.2	0.0	1.3	0.7	0.0	2.6
Initial Q Delay(d3),s/veh	0.0	0.0	0.0	0.0	0.0	0.0	0.0	0.0	0.0	0.0	0.0	0.0
%ile BackOfQ(50%),veh/ln	0.3	2.3	0.0	0.1	2.2	0.1	0.1	0.0	0.1	0.2	0.0	0.2
Unsig. Movement Delay, s/veh												
LnGrp Delay(d),s/veh	33.4	6.6	4.2	47.9	6.8	4.5	24.5	0.0	23.7	24.9	0.0	25.0
LnGrp LOS	C	A	A	D	A	A	C	A	C	C	A	C
Approach Vol, veh/h		1100			1038			22			27	
Approach Delay, s/veh		7.0			7.0			24.1			24.9	
Approach LOS		A			A			C			C	

Timer - Assigned Phs	1	2		4	5	6		8
Phs Duration (G+Y+Rc), s	7.4	34.1		7.1	6.7	34.7		7.1
Change Period (Y+Rc), s	6.4	6.4		5.0	6.4	6.4		5.0
Max Green Setting (Gmax), s	5.0	43.2		18.0	5.0	43.2		31.0
Max Q Clear Time (g_c+I1), s	2.5	10.8		4.1	2.1	11.4		4.1
Green Ext Time (p_c), s	0.0	16.1		0.1	0.0	17.0		0.0

Intersection Summary		
HCM 6th Ctrl Delay		7.4
HCM 6th LOS		A

Intersection	
Int Delay, s/veh	1.5

Movement	EBL	EBT	WBT	WBR	SBL	SBR
Lane Configurations						
Traffic Vol, veh/h	15	115	190	4	12	30
Future Vol, veh/h	15	115	190	4	12	30
Conflicting Peds, #/hr	0	0	0	0	0	0
Sign Control	Free	Free	Free	Free	Stop	Stop
RT Channelized	-	None	-	None	-	None
Storage Length	450	-	-	-	0	-
Veh in Median Storage, #	-	0	0	-	0	-
Grade, %	-	0	0	-	0	-
Peak Hour Factor	80	80	80	80	80	80
Heavy Vehicles, %	8	8	2	2	15	15
Mvmt Flow	19	144	238	5	15	38

Major/Minor	Major1		Major2		Minor2	
Conflicting Flow All	243	0	-	0	423	241
Stage 1	-	-	-	-	241	-
Stage 2	-	-	-	-	182	-
Critical Hdwy	4.18	-	-	-	6.55	6.35
Critical Hdwy Stg 1	-	-	-	-	5.55	-
Critical Hdwy Stg 2	-	-	-	-	5.55	-
Follow-up Hdwy	2.272	-	-	-	3.635	3.435
Pot Cap-1 Maneuver	1289	-	-	-	564	767
Stage 1	-	-	-	-	770	-
Stage 2	-	-	-	-	819	-
Platoon blocked, %		-	-	-		
Mov Cap-1 Maneuver	1289	-	-	-	556	767
Mov Cap-2 Maneuver	-	-	-	-	556	-
Stage 1	-	-	-	-	758	-
Stage 2	-	-	-	-	819	-

Approach	EB	WB	SB
HCM Control Delay, s	0.9	0	10.6
HCM LOS			B

Minor Lane/Major Mvmt	EBL	EBT	WBT	WBR	SBLn1
Capacity (veh/h)	1289	-	-	-	692
HCM Lane V/C Ratio	0.015	-	-	-	0.076
HCM Control Delay (s)	7.8	-	-	-	10.6
HCM Lane LOS	A	-	-	-	B
HCM 95th %tile Q(veh)	0	-	-	-	0.2

Intersection	
Int Delay, s/veh	2.9

Movement	EBL	EBT	EBR	WBL	WBT	WBR	NBL	NBT	NBR	SBL	SBT	SBR
Lane Configurations												
Traffic Vol, veh/h	5	115	70	80	145	5	20	0	10	5	5	10
Future Vol, veh/h	5	115	70	80	145	5	20	0	10	5	5	10
Conflicting Peds, #/hr	0	0	0	0	0	0	0	0	0	0	0	0
Sign Control	Free	Free	Free	Free	Free	Free	Stop	Stop	Stop	Stop	Stop	Stop
RT Channelized	-	-	None	-	-	None	-	-	None	-	-	None
Storage Length	-	-	-	-	-	-	-	-	-	-	-	-
Veh in Median Storage, #	-	0	-	-	0	-	-	0	-	-	0	-
Grade, %	-	0	-	-	0	-	-	0	-	-	0	-
Peak Hour Factor	81	81	81	81	81	81	81	81	81	81	81	81
Heavy Vehicles, %	9	9	9	7	7	7	0	0	0	53	53	53
Mvmt Flow	6	142	86	99	179	6	25	0	12	6	6	12

Major/Minor	Major1			Major2			Minor1			Minor2		
Conflicting Flow All	185	0	0	228	0	0	586	580	114	463	620	182
Stage 1	-	-	-	-	-	-	197	197	-	380	380	-
Stage 2	-	-	-	-	-	-	389	383	-	83	240	-
Critical Hdwy	4.235	-	-	4.205	-	-	7.3	6.5	6.9	8.095	7.295	6.995
Critical Hdwy Stg 1	-	-	-	-	-	-	6.5	5.5	-	6.895	6.295	-
Critical Hdwy Stg 2	-	-	-	-	-	-	6.1	5.5	-	7.295	6.295	-
Follow-up Hdwy	2.2855	-	-	2.2665	-	-	3.5	4	3.3	4.0035	4.5035	3.8035
Pot Cap-1 Maneuver	1343	-	-	1306	-	-	411	428	923	406	327	731
Stage 1	-	-	-	-	-	-	792	742	-	532	517	-
Stage 2	-	-	-	-	-	-	639	616	-	796	608	-
Platoon blocked, %		-	-		-	-						
Mov Cap-1 Maneuver	1343	-	-	1306	-	-	370	389	923	373	298	731
Mov Cap-2 Maneuver	-	-	-	-	-	-	370	389	-	373	298	-
Stage 1	-	-	-	-	-	-	788	738	-	529	473	-
Stage 2	-	-	-	-	-	-	567	564	-	781	605	-

Approach	EB	WB	NB	SB
HCM Control Delay, s	0.2	2.8	13.5	13.3
HCM LOS			B	B

Minor Lane/Major Mvmt	NBLn1	EBL	EBT	EBR	WBL	WBT	WBR	SBLn1
Capacity (veh/h)	462	1343	-	-	1306	-	-	456
HCM Lane V/C Ratio	0.08	0.005	-	-	0.076	-	-	0.054
HCM Control Delay (s)	13.5	7.7	0	-	8	0	-	13.3
HCM Lane LOS	B	A	A	-	A	A	-	B
HCM 95th %tile Q(veh)	0.3	0	-	-	0.2	-	-	0.2

Movement	WBL	WBR	NBT	NBR	SBL	SBT
Lane Configurations						
Traffic Volume (veh/h)	86	84	426	62	143	1192
Future Volume (veh/h)	86	84	426	62	143	1192
Initial Q (Qb), veh	0	0	0	0	0	0
Ped-Bike Adj(A_pbT)	1.00	1.00		1.00	1.00	
Parking Bus, Adj	1.00	1.00	1.00	1.00	1.00	1.00
Work Zone On Approach	No		No			No
Adj Sat Flow, veh/h/ln	1781	1781	1826	1826	1885	1885
Adj Flow Rate, veh/h	92	90	458	67	154	1282
Peak Hour Factor	0.93	0.93	0.93	0.93	0.93	0.93
Percent Heavy Veh, %	8	8	5	5	1	1
Cap, veh/h	106	103	1027	150	596	1411
Arrive On Green	0.13	0.13	0.66	0.66	0.04	0.75
Sat Flow, veh/h	804	787	1557	228	1795	1885
Grp Volume(v), veh/h	183	0	0	525	154	1282
Grp Sat Flow(s),veh/h/ln	1600	0	0	1785	1795	1885
Q Serve(g_s), s	13.5	0.0	0.0	17.0	3.2	64.1
Cycle Q Clear(g_c), s	13.5	0.0	0.0	17.0	3.2	64.1
Prop In Lane	0.50	0.49		0.13	1.00	
Lane Grp Cap(c), veh/h	210	0	0	1177	596	1411
V/C Ratio(X)	0.87	0.00	0.00	0.45	0.26	0.91
Avail Cap(c_a), veh/h	320	0	0	1342	621	1596
HCM Platoon Ratio	1.00	1.00	1.00	1.00	1.00	1.00
Upstream Filter(I)	1.00	0.00	0.00	1.00	1.00	1.00
Uniform Delay (d), s/veh	51.1	0.0	0.0	9.9	7.0	11.8
Incr Delay (d2), s/veh	15.1	0.0	0.0	0.4	0.3	7.7
Initial Q Delay(d3),s/veh	0.0	0.0	0.0	0.0	0.0	0.0
%ile BackOfQ(50%),veh/ln	6.3	0.0	0.0	6.4	1.1	25.0
Unsig. Movement Delay, s/veh						
LnGrp Delay(d),s/veh	66.2	0.0	0.0	10.2	7.3	19.6
LnGrp LOS	E	A	A	B	A	B
Approach Vol, veh/h	183		525			1436
Approach Delay, s/veh	66.2		10.2			18.3
Approach LOS	E		B			B

Timer - Assigned Phs	1	2				6	8
Phs Duration (G+Y+Rc), s	10.7	87.2				98.0	22.1
Change Period (Y+Rc), s	5.5	* 8.1				* 8.1	6.3
Max Green Setting (Gmax), s	6.9	* 90				* 1E2	24.0
Max Q Clear Time (g_c+I1), s	5.2	19.0				66.1	15.5
Green Ext Time (p_c), s	0.1	6.1				23.7	0.3

Intersection Summary	
HCM 6th Ctrl Delay	20.4
HCM 6th LOS	C

Notes

User approved pedestrian interval to be less than phase max green.

User approved volume balancing among the lanes for turning movement.

* HCM 6th computational engine requires equal clearance times for the phases crossing the barrier.

Movement	EBL	EBR	NBL	NBT	SBT	SBR
Lane Configurations						
Traffic Volume (vph)	55	280	80	327	1284	90
Future Volume (vph)	55	280	80	327	1284	90
Ideal Flow (vphpl)	1900	1900	1900	1900	1900	1900
Total Lost time (s)	5.0	5.0	6.5	6.5	6.5	6.5
Lane Util. Factor	1.00	1.00	1.00	1.00	1.00	1.00
Frt	1.00	0.85	1.00	1.00	1.00	0.85
Flt Protected	0.95	1.00	0.95	1.00	1.00	1.00
Satd. Flow (prot)	1752	1568	1787	1881	1881	1599
Flt Permitted	0.95	1.00	0.02	1.00	1.00	1.00
Satd. Flow (perm)	1752	1568	42	1881	1881	1599
Peak-hour factor, PHF	0.94	0.94	0.94	0.94	0.94	0.94
Adj. Flow (vph)	59	298	85	348	1366	96
RTOR Reduction (vph)	0	91	0	0	0	6
Lane Group Flow (vph)	59	207	85	348	1366	90
Heavy Vehicles (%)	3%	3%	1%	1%	1%	1%
Turn Type	custom	custom	pm+pt	NA	NA	Perm
Protected Phases	3	3	5	2	6	
Permitted Phases	4	4	2			6
Actuated Green, G (s)	35.7	35.7	192.8	192.8	173.8	173.8
Effective Green, g (s)	35.7	35.7	192.8	192.8	173.8	173.8
Actuated g/C Ratio	0.15	0.15	0.80	0.80	0.72	0.72
Clearance Time (s)	5.0	5.0	6.5	6.5	6.5	6.5
Vehicle Extension (s)	2.0	2.0	2.0	5.0	5.0	5.0
Lane Grp Cap (vph)	260	233	124	1511	1362	1157
v/s Ratio Prot	0.03	c0.13	c0.04	0.18	c0.73	
v/s Ratio Perm			0.52			0.06
v/c Ratio	0.23	0.89	0.69	0.23	1.00	0.08
Uniform Delay, d1	90.0	100.2	91.7	5.7	33.1	9.7
Progression Factor	1.00	1.00	0.97	1.63	1.00	1.00
Incremental Delay, d2	0.2	30.1	11.6	0.3	25.1	0.1
Delay (s)	90.2	130.3	100.3	9.7	58.2	9.8
Level of Service	F	F	F	A	E	A
Approach Delay (s)	123.6			27.5	55.0	
Approach LOS	F			C	E	

Intersection Summary			
HCM 2000 Control Delay	60.6	HCM 2000 Level of Service	E
HCM 2000 Volume to Capacity ratio	0.98		
Actuated Cycle Length (s)	240.0	Sum of lost time (s)	21.0
Intersection Capacity Utilization	94.5%	ICU Level of Service	F
Analysis Period (min)	15		
c Critical Lane Group			

Movement	EBL	EBR	NBL	NBT	SBT	SBR
Lane Configurations						
Traffic Volume (vph)	117	20	10	270	1225	244
Future Volume (vph)	117	20	10	270	1225	244
Ideal Flow (vphpl)	1900	1900	1900	1900	1900	1900
Total Lost time (s)	5.0	5.0	6.0	6.0	6.0	5.0
Lane Util. Factor	1.00	1.00	1.00	1.00	1.00	1.00
Frt	1.00	0.85	1.00	1.00	1.00	0.85
Flt Protected	0.95	1.00	0.95	1.00	1.00	1.00
Satd. Flow (prot)	1787	1599	1787	1881	1881	1599
Flt Permitted	0.95	1.00	0.04	1.00	1.00	1.00
Satd. Flow (perm)	1787	1599	79	1881	1881	1599
Peak-hour factor, PHF	0.91	0.91	0.91	0.91	0.91	0.91
Adj. Flow (vph)	129	22	11	297	1346	268
RTOR Reduction (vph)	0	20	0	0	0	22
Lane Group Flow (vph)	129	2	11	297	1346	246
Heavy Vehicles (%)	1%	1%	1%	1%	1%	1%
Turn Type	custom	custom	pm+pt	NA	NA	pm+ov
Protected Phases	3	3	5	2	6	3
Permitted Phases	4	4	2			6
Actuated Green, G (s)	13.0	13.0	96.0	96.0	89.0	102.0
Effective Green, g (s)	13.0	13.0	96.0	96.0	89.0	102.0
Actuated g/C Ratio	0.11	0.11	0.80	0.80	0.74	0.85
Clearance Time (s)	5.0	5.0	6.0	6.0	6.0	5.0
Vehicle Extension (s)	2.0	2.0	2.0	2.0	2.0	2.0
Lane Grp Cap (vph)	193	173	77	1504	1395	1359
v/s Ratio Prot	c0.07	0.00	0.00	c0.16	c0.72	0.02
v/s Ratio Perm			0.11			0.13
v/c Ratio	0.67	0.01	0.14	0.20	0.96	0.18
Uniform Delay, d1	51.4	47.8	37.1	2.9	14.1	1.6
Progression Factor	1.00	1.00	1.00	1.00	1.49	1.10
Incremental Delay, d2	6.6	0.0	0.3	0.3	7.3	0.0
Delay (s)	58.1	47.8	37.4	3.1	28.3	1.8
Level of Service	E	D	D	A	C	A
Approach Delay (s)	56.6			4.4	23.9	
Approach LOS	E			A	C	

Intersection Summary			
HCM 2000 Control Delay	23.4	HCM 2000 Level of Service	C
HCM 2000 Volume to Capacity ratio	0.95		
Actuated Cycle Length (s)	120.0	Sum of lost time (s)	20.0
Intersection Capacity Utilization	80.1%	ICU Level of Service	D
Analysis Period (min)	15		
c Critical Lane Group			

Intersection	
Int Delay, s/veh	8.7

Movement	EBL	EBT	EBR	WBL	WBT	WBR	NBL	NBT	NBR	SBL	SBT	SBR
Lane Configurations												
Traffic Vol, veh/h	0	0	0	180	0	15	20	250	0	0	500	675
Future Vol, veh/h	0	0	0	180	0	15	20	250	0	0	500	675
Conflicting Peds, #/hr	0	0	0	0	0	0	0	0	0	0	0	0
Sign Control	Stop	Stop	Stop	Stop	Stop	Stop	Free	Free	Free	Free	Free	Free
RT Channelized	-	-	None	-	-	None	-	-	None	-	-	None
Storage Length	-	-	-	-	-	500	175	-	-	-	-	375
Veh in Median Storage, #	-	1	-	-	0	-	-	0	-	-	0	-
Grade, %	-	0	-	-	0	-	-	0	-	-	0	-
Peak Hour Factor	98	98	98	98	98	98	98	98	98	98	98	98
Heavy Vehicles, %	0	0	0	1	1	1	1	1	1	1	1	1
Mvmt Flow	0	0	0	184	0	15	20	255	0	0	510	689

Major/Minor	Minor1		Major1			Major2			
Conflicting Flow All	1150	1494	255	1199	0	-	-	-	0
Stage 1	295	295	-	-	-	-	-	-	-
Stage 2	855	1199	-	-	-	-	-	-	-
Critical Hdwy	6.41	6.51	6.21	4.11	-	-	-	-	-
Critical Hdwy Stg 1	5.41	5.51	-	-	-	-	-	-	-
Critical Hdwy Stg 2	5.41	5.51	-	-	-	-	-	-	-
Follow-up Hdwy	3.509	4.009	3.309	2.209	-	-	-	-	-
Pot Cap-1 Maneuver	220	124	786	586	-	0	0	-	-
Stage 1	758	671	-	-	-	0	0	-	-
Stage 2	418	260	-	-	-	0	0	-	-
Platoon blocked, %					-			-	-
Mov Cap-1 Maneuver	213	0	786	586	-	-	-	-	-
Mov Cap-2 Maneuver	213	0	-	-	-	-	-	-	-
Stage 1	732	0	-	-	-	-	-	-	-
Stage 2	418	0	-	-	-	-	-	-	-

Approach	WB	NB	SB
HCM Control Delay, s	72.4	0.8	0
HCM LOS	F		

Minor Lane/Major Mvmt	NBL	NBT	WBLn1	WBLn2	SBT	SBR
Capacity (veh/h)	586	-	213	786	-	-
HCM Lane V/C Ratio	0.035	-	0.862	0.019	-	-
HCM Control Delay (s)	11.4	-	77.6	9.7	-	-
HCM Lane LOS	B	-	F	A	-	-
HCM 95th %tile Q(veh)	0.1	-	6.7	0.1	-	-

Movement	EBL	EBR	NBL	NBT	SBT	SBR
Lane Configurations						
Traffic Volume (veh/h)	150	20	30	120	685	15
Future Volume (veh/h)	150	20	30	120	685	15
Initial Q (Qb), veh	0	0	0	0	0	0
Ped-Bike Adj(A_pbT)	1.00	1.00	1.00			1.00
Parking Bus, Adj	1.00	1.00	1.00	1.00	1.00	1.00
Work Zone On Approach	No			No	No	
Adj Sat Flow, veh/h/ln	1885	1885	1885	1885	1900	1900
Adj Flow Rate, veh/h	156	21	31	125	714	16
Peak Hour Factor	0.96	0.96	0.96	0.96	0.96	0.96
Percent Heavy Veh, %	1	1	1	1	0	0
Cap, veh/h	253	225	185	674	1059	24
Arrive On Green	0.14	0.14	0.57	0.57	0.57	0.57
Sat Flow, veh/h	1795	1598	151	1178	1851	41
Grp Volume(v), veh/h	156	21	156	0	0	730
Grp Sat Flow(s),veh/h/ln	1795	1598	1329	0	0	1893
Q Serve(g_s), s	3.6	0.5	0.5	0.0	0.0	11.8
Cycle Q Clear(g_c), s	3.6	0.5	12.3	0.0	0.0	11.8
Prop In Lane	1.00	1.00	0.20			0.02
Lane Grp Cap(c), veh/h	253	225	858	0	0	1083
V/C Ratio(X)	0.62	0.09	0.18	0.00	0.00	0.67
Avail Cap(c_a), veh/h	1378	1226	858	0	0	1883
HCM Platoon Ratio	1.00	1.00	1.00	1.00	1.00	1.00
Upstream Filter(I)	1.00	1.00	1.00	0.00	0.00	1.00
Uniform Delay (d), s/veh	17.7	16.4	4.6	0.0	0.0	6.5
Incr Delay (d2), s/veh	2.4	0.2	0.2	0.0	0.0	1.6
Initial Q Delay(d3),s/veh	0.0	0.0	0.0	0.0	0.0	0.0
%ile BackOfQ(50%),veh/ln	1.5	0.2	0.4	0.0	0.0	3.2
Unsig. Movement Delay, s/veh						
LnGrp Delay(d),s/veh	20.2	16.6	4.8	0.0	0.0	8.1
LnGrp LOS	C	B	A	A	A	A
Approach Vol, veh/h	177			156	730	
Approach Delay, s/veh	19.7			4.8	8.1	
Approach LOS	B			A	A	

Timer - Assigned Phs		2		4		6
Phs Duration (G+Y+Rc), s		31.4		12.5		31.4
Change Period (Y+Rc), s		6.3		6.3		6.3
Max Green Setting (Gmax), s		23.7		33.7		43.7
Max Q Clear Time (g_c+I1), s		14.3		5.6		13.8
Green Ext Time (p_c), s		1.0		0.5		11.3

Intersection Summary	
HCM 6th Ctrl Delay	9.6
HCM 6th LOS	A

Movement	EBL	EBT	EBR	WBL	WBT	WBR	NBL	NBT	NBR	SBL	SBT	SBR
Lane Configurations												
Traffic Volume (veh/h)	85	5	20	10	5	5	35	490	5	5	1270	295
Future Volume (veh/h)	85	5	20	10	5	5	35	490	5	5	1270	295
Initial Q (Qb), veh	0	0	0	0	0	0	0	0	0	0	0	0
Ped-Bike Adj(A_pbT)	1.00		1.00	1.00		1.00	1.00		1.00	1.00		1.00
Parking Bus, Adj	1.00	1.00	1.00	1.00	1.00	1.00	1.00	1.00	1.00	1.00	1.00	1.00
Work Zone On Approach		No			No			No			No	
Adj Sat Flow, veh/h/ln	1885	1885	1885	1900	1900	1900	1826	1826	1826	1856	1856	1856
Adj Flow Rate, veh/h	90	5	21	11	5	5	37	521	5	5	1351	314
Peak Hour Factor	0.94	0.94	0.94	0.94	0.94	0.94	0.94	0.94	0.94	0.94	0.94	0.94
Percent Heavy Veh, %	1	1	1	0	0	0	5	5	5	3	3	3
Cap, veh/h	144	6	23	213	116	116	78	1313	13	593	1327	1125
Arrive On Green	0.09	0.09	0.09	0.01	0.13	0.13	0.02	0.73	0.73	0.00	0.72	0.72
Sat Flow, veh/h	1134	63	265	1810	872	872	1739	1805	17	1767	1856	1572
Grp Volume(v), veh/h	116	0	0	11	0	10	37	0	526	5	1351	314
Grp Sat Flow(s),veh/h/ln	1462	0	0	1810	0	1743	1739	0	1823	1767	1856	1572
Q Serve(g_s), s	11.3	0.0	0.0	0.8	0.0	0.7	0.8	0.0	15.9	0.1	102.9	10.2
Cycle Q Clear(g_c), s	11.3	0.0	0.0	0.8	0.0	0.7	0.8	0.0	15.9	0.1	102.9	10.2
Prop In Lane	0.78		0.18	1.00		0.50	1.00		0.01	1.00		1.00
Lane Grp Cap(c), veh/h	172	0	0	213	0	232	78	0	1326	593	1327	1125
V/C Ratio(X)	0.67	0.00	0.00	0.05	0.00	0.04	0.47	0.00	0.40	0.01	1.02	0.28
Avail Cap(c_a), veh/h	172	0	0	269	0	298	98	0	1326	636	1327	1125
HCM Platoon Ratio	1.00	1.00	1.00	1.00	1.00	1.00	1.00	1.00	1.00	1.00	1.00	1.00
Upstream Filter(I)	1.00	0.00	0.00	1.00	0.00	1.00	1.00	0.00	1.00	1.00	1.00	1.00
Uniform Delay (d), s/veh	65.1	0.0	0.0	57.5	0.0	54.4	42.1	0.0	7.5	6.4	20.5	7.3
Incr Delay (d2), s/veh	10.9	0.0	0.0	0.1	0.0	0.1	4.4	0.0	0.4	0.0	29.3	0.3
Initial Q Delay(d3),s/veh	0.0	0.0	0.0	0.0	0.0	0.0	0.0	0.0	0.0	0.0	0.0	0.0
%ile BackOfQ(50%),veh/ln	4.8	0.0	0.0	0.4	0.0	0.3	1.0	0.0	6.1	0.0	50.4	3.4
Unsig. Movement Delay, s/veh												
LnGrp Delay(d),s/veh	76.0	0.0	0.0	57.6	0.0	54.5	46.5	0.0	7.9	6.4	49.8	7.6
LnGrp LOS	E	A	A	E	A	D	D	A	A	A	F	A
Approach Vol, veh/h		116			21			563			1670	
Approach Delay, s/veh		76.0			56.1			10.5			41.7	
Approach LOS		E			E			B			D	

Timer - Assigned Phs	1	2	3	4	5	6		8
Phs Duration (G+Y+Rc), s	6.0	111.8	6.6	19.5	7.8	110.0		26.1
Change Period (Y+Rc), s	5.5	7.1	5.5	6.9	5.5	7.1		* 6.9
Max Green Setting (Gmax), s	4.0	102.9	5.5	12.6	4.0	102.9		* 25
Max Q Clear Time (g_c+I1), s	2.1	17.9	2.8	13.3	2.8	104.9		2.7
Green Ext Time (p_c), s	0.0	8.7	0.0	0.0	0.0	0.0		0.0

Intersection Summary	
HCM 6th Ctrl Delay	36.1
HCM 6th LOS	D

Notes

* HCM 6th computational engine requires equal clearance times for the phases crossing the barrier.

Movement	EBL	EBT	EBR	WBL	WBT	WBR	NBL	NBT	NBR	SBL	SBT	SBR
Lane Configurations												
Traffic Volume (veh/h)	450	1173	110	5	423	142	85	70	30	552	85	690
Future Volume (veh/h)	450	1173	110	5	423	142	85	70	30	552	85	690
Initial Q (Qb), veh	0	0	0	0	0	0	0	0	0	0	0	0
Ped-Bike Adj(A_pbT)	1.00		1.00	1.00		1.00	1.00		0.99	1.00		0.99
Parking Bus, Adj	1.00	1.00	1.00	1.00	1.00	1.00	1.00	1.00	1.00	1.00	1.00	1.00
Work Zone On Approach		No			No			No			No	
Adj Sat Flow, veh/h/ln	1870	1870	1870	1856	1856	1856	1900	1900	1900	1870	1870	1870
Adj Flow Rate, veh/h	469	1222	115	5	441	148	89	73	31	575	89	719
Peak Hour Factor	0.96	0.96	0.96	0.96	0.96	0.96	0.96	0.96	0.96	0.96	0.96	0.96
Percent Heavy Veh, %	2	2	2	3	3	3	0	0	0	2	2	2
Cap, veh/h	470	1441	642	11	521	231	109	255	108	480	770	1067
Arrive On Green	0.26	0.41	0.41	0.01	0.15	0.15	0.06	0.20	0.20	0.27	0.41	0.41
Sat Flow, veh/h	1781	3554	1583	1767	3526	1567	1810	1259	535	1781	1870	1574
Grp Volume(v), veh/h	469	1222	115	5	441	148	89	0	104	575	89	719
Grp Sat Flow(s),veh/h/ln	1781	1777	1583	1767	1763	1567	1810	0	1794	1781	1870	1574
Q Serve(g_s), s	46.8	55.4	8.3	0.5	21.7	15.8	8.7	0.0	8.7	48.0	5.2	48.5
Cycle Q Clear(g_c), s	46.8	55.4	8.3	0.5	21.7	15.8	8.7	0.0	8.7	48.0	5.2	48.5
Prop In Lane	1.00		1.00	1.00		1.00	1.00		0.30	1.00		1.00
Lane Grp Cap(c), veh/h	470	1441	642	11	521	231	109	0	363	480	770	1067
V/C Ratio(X)	1.00	0.85	0.18	0.46	0.85	0.64	0.82	0.00	0.29	1.20	0.12	0.67
Avail Cap(c_a), veh/h	470	1441	642	50	574	255	285	0	363	480	770	1067
HCM Platoon Ratio	1.00	1.00	1.00	1.00	1.00	1.00	1.00	1.00	1.00	1.00	1.00	1.00
Upstream Filter(I)	1.00	1.00	1.00	1.00	1.00	1.00	1.00	0.00	1.00	1.00	1.00	1.00
Uniform Delay (d), s/veh	65.4	47.9	33.9	88.2	73.9	71.4	82.7	0.0	60.1	65.0	32.3	17.2
Incr Delay (d2), s/veh	40.7	5.4	0.3	27.4	12.2	7.2	13.8	0.0	2.0	107.4	0.3	3.4
Initial Q Delay(d3),s/veh	0.0	0.0	0.0	0.0	0.0	0.0	0.0	0.0	0.0	0.0	0.0	0.0
%ile BackOfQ(50%),veh/ln	26.6	25.7	3.3	0.3	10.8	6.9	4.5	0.0	4.2	36.2	2.5	18.4
Unsig. Movement Delay, s/veh												
LnGrp Delay(d),s/veh	106.1	53.3	34.2	115.5	86.1	78.6	96.5	0.0	62.1	172.4	32.6	20.6
LnGrp LOS	F	D	C	F	F	E	F	A	E	F	C	C
Approach Vol, veh/h		1806			594			193			1383	
Approach Delay, s/veh		65.8			84.5			78.0			84.5	
Approach LOS		E			F			E			F	

Timer - Assigned Phs	1	2	3	4	5	6	7	8
Phs Duration (G+Y+Rc), s	6.1	77.9	15.7	78.3	52.0	32.0	53.0	41.0
Change Period (Y+Rc), s	5.0	5.7	5.0	5.0	5.0	* 5.7	5.0	5.0
Max Green Setting (Gmax), s	5.0	70.3	28.0	56.0	47.0	* 29	48.0	36.0
Max Q Clear Time (g_c+I1), s	2.5	57.4	10.7	50.5	48.8	23.7	50.0	10.7
Green Ext Time (p_c), s	0.0	10.1	0.2	1.8	0.0	2.5	0.0	0.5

Intersection Summary	
HCM 6th Ctrl Delay	75.7
HCM 6th LOS	E

Notes

User approved pedestrian interval to be less than phase max green.

* HCM 6th computational engine requires equal clearance times for the phases crossing the barrier.

Movement	EBT	EBR	WBL	WBT	NBL	NBR
Lane Configurations						
Traffic Volume (veh/h)	1353	1194	523	670	386	380
Future Volume (veh/h)	1353	1194	523	670	386	380
Initial Q (Qb), veh	0	0	0	0	0	0
Ped-Bike Adj(A_pbT)		1.00	1.00		1.00	1.00
Parking Bus, Adj	1.00	1.00	1.00	1.00	1.00	1.00
Work Zone On Approach	No			No	No	
Adj Sat Flow, veh/h/ln	1885	1885	1870	1870	1885	1885
Adj Flow Rate, veh/h	1395	0	539	691	398	392
Peak Hour Factor	0.97	0.97	0.97	0.97	0.97	0.97
Percent Heavy Veh, %	1	1	2	2	1	1
Cap, veh/h	2251		518	2739	527	706
Arrive On Green	0.44	0.00	0.29	0.77	0.15	0.15
Sat Flow, veh/h	5316	1598	1781	3647	3483	1598
Grp Volume(v), veh/h	1395	0	539	691	398	392
Grp Sat Flow(s),veh/h/ln	1716	1598	1781	1777	1742	1598
Q Serve(g_s), s	31.4	0.0	43.6	8.3	16.4	22.7
Cycle Q Clear(g_c), s	31.4	0.0	43.6	8.3	16.4	22.7
Prop In Lane		1.00	1.00		1.00	1.00
Lane Grp Cap(c), veh/h	2251		518	2739	527	706
V/C Ratio(X)	0.62		1.04	0.25	0.76	0.56
Avail Cap(c_a), veh/h	2251		518	2739	527	706
HCM Platoon Ratio	1.00	1.00	1.00	1.00	1.00	1.00
Upstream Filter(I)	1.00	0.00	0.85	0.85	1.00	1.00
Uniform Delay (d), s/veh	32.6	0.0	53.2	4.9	61.0	30.9
Incr Delay (d2), s/veh	1.3	0.0	47.6	0.2	6.6	1.2
Initial Q Delay(d3),s/veh	0.0	0.0	0.0	0.0	0.0	0.0
%ile BackOfQ(50%),veh/ln	13.4	0.0	26.3	2.9	7.8	10.8
Unsig. Movement Delay, s/veh						
LnGrp Delay(d),s/veh	33.9	0.0	100.8	5.1	67.6	32.2
LnGrp LOS	C		F	A	E	C
Approach Vol, veh/h	1395	A		1230	790	
Approach Delay, s/veh	33.9			47.0	50.0	
Approach LOS	C			D	D	

Timer - Assigned Phs	1	2				6	8
Phs Duration (G+Y+Rc), s	50.0	72.0				122.0	28.0
Change Period (Y+Rc), s	6.4	6.4				6.4	5.3
Max Green Setting (Gmax), s	43.6	65.6				115.6	22.7
Max Q Clear Time (g_c+I1), s	45.6	33.4				10.3	24.7
Green Ext Time (p_c), s	0.0	21.5				12.2	0.0

Intersection Summary	
HCM 6th Ctrl Delay	42.3
HCM 6th LOS	D

Notes

User approved pedestrian interval to be less than phase max green.

Unsignalized Delay for [EBR] is excluded from calculations of the approach delay and intersection delay.

Movement	EBL	EBT	EBR	WBL	WBT	WBR	NBL	NBT	NBR	SBL	SBT	SBR
Lane Configurations												
Traffic Volume (vph)	85	1579	0	0	953	333	0	0	707	0	0	674
Future Volume (vph)	85	1579	0	0	953	333	0	0	707	0	0	674
Ideal Flow (vphpl)	1900	1900	1900	1900	1900	1900	1900	1900	1900	1900	1900	1900
Total Lost time (s)	5.0	5.0			5.0	5.0			4.0			5.0
Lane Util. Factor	1.00	0.95			0.95	1.00			1.00			1.00
Frt	1.00	1.00			1.00	0.85			0.86			0.86
Flt Protected	0.95	1.00			1.00	1.00			1.00			1.00
Satd. Flow (prot)	1770	3539			3539	1583			1627			1611
Flt Permitted	0.95	1.00			1.00	1.00			1.00			1.00
Satd. Flow (perm)	1770	3539			3539	1583			1627			1611
Peak-hour factor, PHF	0.97	0.97	0.97	0.97	0.97	0.97	0.97	0.97	0.97	0.97	0.97	0.97
Adj. Flow (vph)	88	1628	0	0	982	343	0	0	729	0	0	695
RTOR Reduction (vph)	0	0	0	0	0	147	0	0	0	0	0	36
Lane Group Flow (vph)	88	1628	0	0	982	196	0	0	729	0	0	659
Heavy Vehicles (%)	2%	2%	2%	2%	2%	2%	1%	1%	1%	2%	2%	2%
Turn Type	Prot	NA			NA	custom			Free			Prot
Protected Phases	3	6 8			6	1						8
Permitted Phases						6			Free			8
Actuated Green, G (s)	61.9	140.0			68.1	68.1			140.0			61.9
Effective Green, g (s)	61.9	140.0			68.1	68.1			140.0			61.9
Actuated g/C Ratio	0.44	1.00			0.49	0.49			1.00			0.44
Clearance Time (s)	5.0				5.0	5.0						5.0
Vehicle Extension (s)	2.0				2.0	2.0						2.0
Lane Grp Cap (vph)	782	3539			1721	770			1627			712
v/s Ratio Prot	0.05	0.46			c0.28	0.12						c0.41
v/s Ratio Perm									0.45			
v/c Ratio	0.11	0.46			0.57	0.25			0.45			0.93
Uniform Delay, d1	22.9	0.0			25.6	21.1			0.0			36.9
Progression Factor	0.68	1.00			1.00	1.00			1.00			1.00
Incremental Delay, d2	0.0	0.0			1.4	0.8			0.9			17.6
Delay (s)	15.5	0.0			26.9	21.9			0.9			54.4
Level of Service	B	A			C	C			A			D
Approach Delay (s)		0.8			25.6			0.9			54.4	
Approach LOS		A			C			A			D	

Intersection Summary			
HCM 2000 Control Delay	16.5	HCM 2000 Level of Service	B
HCM 2000 Volume to Capacity ratio	0.76		
Actuated Cycle Length (s)	140.0	Sum of lost time (s)	13.0
Intersection Capacity Utilization	76.4%	ICU Level of Service	D
Analysis Period (min)	15		
c Critical Lane Group			

Movement	EBL	EBT	EBR	WBL	WBT	WBR	NBL	NBT	NBR	SBL	SBT	SBR
Lane Configurations												
Traffic Volume (vph)	675	510	75	358	258	1001	0	0	0	1139	1054	562
Future Volume (vph)	675	510	75	358	258	1001	0	0	0	1139	1054	562
Ideal Flow (vphpl)	1900	1900	1900	1900	1900	1900	1900	1900	1900	1900	1900	1900
Total Lost time (s)	5.0	5.0		9.0	9.0	4.0				5.0	5.0	5.0
Lane Util. Factor	0.97	0.95		1.00	0.95	1.00				0.97	0.95	0.95
Frt	1.00	0.98		1.00	1.00	0.85				1.00	1.00	0.85
Flt Protected	0.95	1.00		0.95	1.00	1.00				0.95	1.00	1.00
Satd. Flow (prot)	3467	3505		1770	3539	1583				3433	1770	1504
Flt Permitted	0.95	1.00		0.95	1.00	1.00				0.95	1.00	1.00
Satd. Flow (perm)	3467	3505		1770	3539	1583				3433	1770	1504
Peak-hour factor, PHF	0.98	0.98	0.98	0.98	0.98	0.98	0.98	0.98	0.98	0.98	0.98	0.98
Adj. Flow (vph)	689	520	77	365	263	1021	0	0	0	1162	1076	573
RTOR Reduction (vph)	0	8	0	0	0	4	0	0	0	0	0	0
Lane Group Flow (vph)	689	589	0	365	263	1017	0	0	0	1162	1076	573
Heavy Vehicles (%)	1%	1%	1%	2%	2%	2%	0%	0%	0%	2%	2%	2%
Turn Type	Split	NA		Split	NA	custom				Split	NA	custom
Protected Phases	2	2		3	3	7				4	4	4 5
Permitted Phases						7						
Actuated Green, G (s)	24.0	24.0		25.0	25.0	107.0				72.0	72.0	101.0
Effective Green, g (s)	24.0	24.0		25.0	25.0	107.0				72.0	72.0	101.0
Actuated g/C Ratio	0.17	0.17		0.18	0.18	0.76				0.51	0.51	0.72
Clearance Time (s)	5.0	5.0		9.0	9.0	4.0				5.0	5.0	
Vehicle Extension (s)	4.0	4.0		3.0	3.0	3.0				3.0	3.0	
Lane Grp Cap (vph)	594	600		316	631	1209				1765	910	1085
v/s Ratio Prot	c0.20	0.17		c0.21	0.07	0.64				0.34	c0.61	0.38
v/s Ratio Perm												
v/c Ratio	1.16	0.98		1.16	0.42	0.84				0.66	1.18	0.53
Uniform Delay, d1	58.0	57.8		57.5	51.0	10.9				25.0	34.0	8.8
Progression Factor	1.00	1.00		1.13	1.17	1.17				1.00	1.00	1.00
Incremental Delay, d2	89.6	31.9		92.2	0.3	5.1				1.9	93.4	0.6
Delay (s)	147.6	89.7		157.4	60.2	17.9				26.9	127.4	9.4
Level of Service	F	F		F	E	B				C	F	A
Approach Delay (s)		120.7			55.5			0.0			61.8	
Approach LOS		F			E			A			E	

Intersection Summary			
HCM 2000 Control Delay	73.2	HCM 2000 Level of Service	E
HCM 2000 Volume to Capacity ratio	1.17		
Actuated Cycle Length (s)	140.0	Sum of lost time (s)	19.0
Intersection Capacity Utilization	119.0%	ICU Level of Service	H
Analysis Period (min)	15		
c Critical Lane Group			

Movement	EBL	EBT	EBR	WBL	WBT	WBR	NBL	NBT	NBR	SBL	SBT	SBR
Lane Configurations												
Traffic Volume (veh/h)	305	630	455	995	215	185	60	545	1076	206	1280	130
Future Volume (veh/h)	305	630	455	995	215	185	60	545	1076	206	1280	130
Initial Q (Qb), veh	0	0	0	0	0	0	0	0	0	0	0	0
Ped-Bike Adj(A_pbT)	1.00		1.00	1.00		1.00	1.00		1.00	1.00		1.00
Parking Bus, Adj	1.00	1.00	1.00	1.00	1.00	1.00	1.00	1.00	1.00	1.00	1.00	1.00
Work Zone On Approach		No			No			No			No	
Adj Sat Flow, veh/h/ln	1885	1885	1885	1870	1870	1870	1885	1885	1885	1885	1885	1885
Adj Flow Rate, veh/h	311	643	0	919	354	0	61	556	0	210	1306	0
Peak Hour Factor	0.98	0.98	0.98	0.98	0.98	0.98	0.98	0.98	0.98	0.98	0.98	0.98
Percent Heavy Veh, %	1	1	1	2	2	2	1	1	1	1	1	1
Cap, veh/h	314	660		1119	588		79	1029		259	1588	
Arrive On Green	0.17	0.17	0.00	0.10	0.10	0.00	0.04	0.20	0.00	0.14	0.31	0.00
Sat Flow, veh/h	1795	3770	1598	3563	1870	1585	1795	5147	1598	1795	5147	1598
Grp Volume(v), veh/h	311	643	0	919	354	0	61	556	0	210	1306	0
Grp Sat Flow(s),veh/h/ln	1795	1885	1598	1781	1870	1585	1795	1716	1598	1795	1716	1598
Q Serve(g_s), s	20.7	20.4	0.0	30.3	21.7	0.0	4.0	11.6	0.0	13.6	28.2	0.0
Cycle Q Clear(g_c), s	20.7	20.4	0.0	30.3	21.7	0.0	4.0	11.6	0.0	13.6	28.2	0.0
Prop In Lane	1.00		1.00	1.00		1.00	1.00		1.00	1.00		1.00
Lane Grp Cap(c), veh/h	314	660		1119	588		79	1029		259	1588	
V/C Ratio(X)	0.99	0.97		0.82	0.60		0.77	0.54		0.81	0.82	
Avail Cap(c_a), veh/h	314	660		1128	592		135	1029		269	1588	
HCM Platoon Ratio	1.00	1.00	1.00	0.33	0.33	0.33	1.00	1.00	1.00	1.00	1.00	1.00
Upstream Filter(I)	1.00	1.00	0.00	0.78	0.78	0.00	0.16	0.16	0.00	1.00	1.00	0.00
Uniform Delay (d), s/veh	49.4	49.2	0.0	50.5	46.6	0.0	56.8	43.1	0.0	49.8	38.4	0.0
Incr Delay (d2), s/veh	48.3	29.3	0.0	5.0	3.0	0.0	3.7	0.3	0.0	17.3	4.9	0.0
Initial Q Delay(d3),s/veh	0.0	0.0	0.0	0.0	0.0	0.0	0.0	0.0	0.0	0.0	0.0	0.0
%ile BackOfQ(50%),veh/ln	13.4	12.1	0.0	15.3	11.4	0.0	1.9	5.0	0.0	7.3	12.5	0.0
Unsig. Movement Delay, s/veh												
LnGrp Delay(d),s/veh	97.7	78.6	0.0	55.5	49.6	0.0	60.4	43.4	0.0	67.0	43.4	0.0
LnGrp LOS	F	E		E	D		E	D		E	D	
Approach Vol, veh/h		954	A		1273	A		617	A		1516	A
Approach Delay, s/veh		84.8			53.8			45.1			46.7	
Approach LOS		F			D			D			D	

Timer - Assigned Phs		2	3	4		6	7	8				
Phs Duration (G+Y+Rc), s		42.7	9.3	42.0		26.0	22.3	29.0				
Change Period (Y+Rc), s		5.0	4.0	5.0		5.0	5.0	* 5				
Max Green Setting (Gmax), s		38.0	9.0	33.0		21.0	18.0	* 24				
Max Q Clear Time (g_c+I1), s		32.3	6.0	30.2		22.7	15.6	13.6				
Green Ext Time (p_c), s		5.4	0.0	2.6		0.0	0.2	4.4				

Intersection Summary	
HCM 6th Ctrl Delay	56.9
HCM 6th LOS	E

Notes

User approved volume balancing among the lanes for turning movement.
* HCM 6th computational engine requires equal clearance times for the phases crossing the barrier.
User approved changes to right turn type.

Movement	EBL	EBT	EBR	WBL	WBT	WBR	NBL	NBT	NBR	SBL	SBT	SBR
Lane Configurations												
Traffic Volume (veh/h)	130	1752	25	5	1275	5	20	5	5	10	5	105
Future Volume (veh/h)	130	1752	25	5	1275	5	20	5	5	10	5	105
Initial Q (Qb), veh	0	0	0	0	0	0	0	0	0	0	0	0
Ped-Bike Adj(A_pbT)	1.00		1.00	1.00		1.00	1.00		1.00	1.00		1.00
Parking Bus, Adj	1.00	1.00	1.00	1.00	1.00	1.00	1.00	1.00	1.00	1.00	1.00	1.00
Work Zone On Approach		No			No			No			No	
Adj Sat Flow, veh/h/ln	1885	1885	1885	1870	1870	1870	1900	1900	1900	1870	1870	1870
Adj Flow Rate, veh/h	137	1844	26	5	1342	5	21	5	5	11	5	111
Peak Hour Factor	0.95	0.95	0.95	0.95	0.95	0.95	0.95	0.95	0.95	0.95	0.95	0.95
Percent Heavy Veh, %	1	1	1	2	2	2	0	0	0	2	2	2
Cap, veh/h	166	2843	40	11	2542	9	167	72	72	137	54	143
Arrive On Green	0.12	1.00	1.00	0.01	0.70	0.70	0.09	0.09	0.09	0.09	0.09	0.09
Sat Flow, veh/h	1795	3616	51	1781	3631	14	1180	792	792	958	591	1580
Grp Volume(v), veh/h	137	911	959	5	657	690	21	0	10	16	0	111
Grp Sat Flow(s),veh/h/ln	1795	1791	1876	1781	1777	1868	1180	0	1583	1549	0	1580
Q Serve(g_s), s	8.9	0.0	0.0	0.3	21.1	21.1	1.8	0.0	0.7	0.0	0.0	8.2
Cycle Q Clear(g_c), s	8.9	0.0	0.0	0.3	21.1	21.1	2.8	0.0	0.7	0.9	0.0	8.2
Prop In Lane	1.00		0.03	1.00		0.01	1.00		0.50	0.69		1.00
Lane Grp Cap(c), veh/h	166	1408	1475	11	1244	1308	167	0	144	191	0	143
V/C Ratio(X)	0.82	0.65	0.65	0.44	0.53	0.53	0.13	0.00	0.07	0.08	0.00	0.77
Avail Cap(c_a), veh/h	314	1408	1475	134	1244	1308	265	0	264	307	0	263
HCM Platoon Ratio	1.33	1.33	1.33	1.00	1.00	1.00	1.00	1.00	1.00	1.00	1.00	1.00
Upstream Filter(I)	0.09	0.09	0.09	1.00	1.00	1.00	1.00	0.00	1.00	1.00	0.00	1.00
Uniform Delay (d), s/veh	51.7	0.0	0.0	59.4	8.6	8.6	51.3	0.0	49.9	50.0	0.0	53.4
Incr Delay (d2), s/veh	1.0	0.2	0.2	24.3	1.6	1.5	0.5	0.0	0.3	0.3	0.0	11.9
Initial Q Delay(d3),s/veh	0.0	0.0	0.0	0.0	0.0	0.0	0.0	0.0	0.0	0.0	0.0	0.0
%ile BackOfQ(50%),veh/ln	3.9	0.1	0.1	0.2	7.7	8.1	0.6	0.0	0.3	0.5	0.0	3.8
Unsig. Movement Delay, s/veh												
LnGrp Delay(d),s/veh	52.6	0.2	0.2	83.7	10.2	10.1	51.8	0.0	50.2	50.3	0.0	65.3
LnGrp LOS	D	A	A	F	B	B	D	A	D	D	A	E
Approach Vol, veh/h		2007			1352			31			127	
Approach Delay, s/veh		3.8			10.4			51.3			63.4	
Approach LOS		A			B			D			E	

Timer - Assigned Phs	1	2		4	5	6		8
Phs Duration (G+Y+Rc), s	15.1	89.0		15.9	4.8	99.3		15.9
Change Period (Y+Rc), s	4.0	5.0		5.0	4.0	5.0		5.0
Max Green Setting (Gmax), s	21.0	65.0		20.0	9.0	77.0		20.0
Max Q Clear Time (g_c+I1), s	10.9	23.1		10.2	2.3	2.0		4.8
Green Ext Time (p_c), s	0.3	39.1		0.4	0.0	62.0		0.1

Intersection Summary	
HCM 6th Ctrl Delay	8.9
HCM 6th LOS	A

Movement	EBL	EBT	EBR	WBL	WBT	WBR	NBL	NBT	NBR	SBL	SBT	SBR
Lane Configurations												
Traffic Volume (veh/h)	20	1562	190	70	1160	15	105	15	45	10	20	20
Future Volume (veh/h)	20	1562	190	70	1160	15	105	15	45	10	20	20
Initial Q (Qb), veh	0	0	0	0	0	0	0	0	0	0	0	0
Ped-Bike Adj(A_pbT)	1.00		1.00	1.00		1.00	1.00		0.98	1.00		0.96
Parking Bus, Adj	1.00	1.00	1.00	1.00	1.00	1.00	1.00	1.00	1.00	1.00	1.00	1.00
Work Zone On Approach		No			No			No			No	
Adj Sat Flow, veh/h/ln	1885	1885	1885	1870	1870	1870	1900	1900	1900	1870	1870	1870
Adj Flow Rate, veh/h	21	1644	200	74	1221	16	111	16	47	11	21	21
Peak Hour Factor	0.95	0.95	0.95	0.95	0.95	0.95	0.95	0.95	0.95	0.95	0.95	0.95
Percent Heavy Veh, %	1	1	1	2	2	2	0	0	0	2	2	2
Cap, veh/h	515	2147	257	96	1526	20	156	36	106	63	30	30
Arrive On Green	0.29	0.67	0.67	0.02	0.14	0.14	0.09	0.09	0.09	0.04	0.04	0.04
Sat Flow, veh/h	1795	3221	385	1781	3592	47	1810	420	1233	1781	841	841
Grp Volume(v), veh/h	21	902	942	74	604	633	111	0	63	11	0	42
Grp Sat Flow(s),veh/h/ln	1795	1791	1815	1781	1777	1862	1810	0	1652	1781	0	1682
Q Serve(g_s), s	1.0	40.6	43.2	5.0	39.5	39.5	7.2	0.0	4.3	0.7	0.0	3.0
Cycle Q Clear(g_c), s	1.0	40.6	43.2	5.0	39.5	39.5	7.2	0.0	4.3	0.7	0.0	3.0
Prop In Lane	1.00		0.21	1.00		0.03	1.00		0.75	1.00		0.50
Lane Grp Cap(c), veh/h	515	1194	1210	96	755	791	156	0	142	63	0	59
V/C Ratio(X)	0.04	0.76	0.78	0.77	0.80	0.80	0.71	0.00	0.44	0.18	0.00	0.71
Avail Cap(c_a), veh/h	515	1194	1210	208	755	791	271	0	248	267	0	252
HCM Platoon Ratio	1.00	1.00	1.00	0.33	0.33	0.33	1.00	1.00	1.00	1.00	1.00	1.00
Upstream Filter(I)	1.00	1.00	1.00	0.81	0.81	0.81	1.00	0.00	1.00	1.00	0.00	1.00
Uniform Delay (d), s/veh	30.9	13.4	13.9	58.2	46.6	46.6	53.4	0.0	52.1	56.2	0.0	57.3
Incr Delay (d2), s/veh	0.0	4.5	5.0	10.2	7.1	6.9	8.3	0.0	3.1	1.9	0.0	19.8
Initial Q Delay(d3),s/veh	0.0	0.0	0.0	0.0	0.0	0.0	0.0	0.0	0.0	0.0	0.0	0.0
%ile BackOfQ(50%),veh/ln	0.4	16.1	17.4	2.6	20.3	21.2	3.6	0.0	1.9	0.4	0.0	1.6
Unsig. Movement Delay, s/veh												
LnGrp Delay(d),s/veh	30.9	17.9	18.8	68.4	53.8	53.5	61.7	0.0	55.2	58.1	0.0	77.1
LnGrp LOS	C	B	B	E	D	D	E	A	E	E	A	E
Approach Vol, veh/h		1865			1311			174			53	
Approach Delay, s/veh		18.5			54.5			59.3			73.1	
Approach LOS		B			D			E			E	

Timer - Assigned Phs	1	2		4	5	6		8
Phs Duration (G+Y+Rc), s	39.4	56.0		15.3	10.4	85.0		9.2
Change Period (Y+Rc), s	5.0	* 5		5.0	4.0	5.0		5.0
Max Green Setting (Gmax), s	14.0	* 51		18.0	14.0	51.0		18.0
Max Q Clear Time (g_c+I1), s	3.0	41.5		9.2	7.0	45.2		5.0
Green Ext Time (p_c), s	0.0	8.7		0.5	0.1	5.8		0.1

Intersection Summary	
HCM 6th Ctrl Delay	35.3
HCM 6th LOS	D

Notes

User approved pedestrian interval to be less than phase max green.

* HCM 6th computational engine requires equal clearance times for the phases crossing the barrier.

Movement	EBL	EBT	EBR	WBL	WBT	WBR	NBL	NBT	NBR	SBL	SBT	SBR
Lane Configurations												
Traffic Volume (veh/h)	10	1575	37	36	1040	85	160	15	44	70	15	30
Future Volume (veh/h)	10	1575	37	36	1040	85	160	15	44	70	15	30
Initial Q (Qb), veh	0	0	0	0	0	0	0	0	0	0	0	0
Ped-Bike Adj(A_pbT)	1.00		1.00	1.00		1.00	1.00		1.00	1.00		1.00
Parking Bus, Adj	1.00	1.00	1.00	1.00	1.00	1.00	1.00	1.00	1.00	1.00	1.00	1.00
Work Zone On Approach		No			No			No			No	
Adj Sat Flow, veh/h/ln	1885	1885	1885	1870	1870	1870	1826	1826	1826	1885	1885	1885
Adj Flow Rate, veh/h	11	1750	41	40	1156	94	178	17	49	78	17	33
Peak Hour Factor	0.90	0.90	0.90	0.90	0.90	0.90	0.90	0.90	0.90	0.90	0.90	0.90
Percent Heavy Veh, %	1	1	1	2	2	2	5	5	5	1	1	1
Cap, veh/h	23	2215	52	55	2120	172	235	18	50	327	66	393
Arrive On Green	0.02	0.82	0.82	0.03	0.64	0.64	0.23	0.23	0.23	0.23	0.23	0.23
Sat Flow, veh/h	1795	3577	84	1781	3328	270	785	75	216	1168	284	1598
Grp Volume(v), veh/h	11	874	917	40	617	633	244	0	0	95	0	33
Grp Sat Flow(s),veh/h/ln	1795	1791	1870	1781	1777	1821	1076	0	0	1451	0	1598
Q Serve(g_s), s	0.7	29.4	29.9	2.7	23.1	23.2	20.9	0.0	0.0	0.0	0.0	1.9
Cycle Q Clear(g_c), s	0.7	29.4	29.9	2.7	23.1	23.2	27.3	0.0	0.0	6.3	0.0	1.9
Prop In Lane	1.00		0.04	1.00		0.15	0.73		0.20	0.82		1.00
Lane Grp Cap(c), veh/h	23	1109	1158	55	1132	1160	303	0	0	393	0	393
V/C Ratio(X)	0.48	0.79	0.79	0.73	0.54	0.55	0.81	0.00	0.00	0.24	0.00	0.08
Avail Cap(c_a), veh/h	135	1109	1158	134	1132	1160	303	0	0	393	0	393
HCM Platoon Ratio	1.33	1.33	1.33	1.00	1.00	1.00	1.00	1.00	1.00	1.00	1.00	1.00
Upstream Filter(I)	0.35	0.35	0.35	1.00	1.00	1.00	1.00	0.00	0.00	1.00	0.00	1.00
Uniform Delay (d), s/veh	58.6	6.6	6.7	57.7	12.1	12.1	48.9	0.0	0.0	37.6	0.0	34.8
Incr Delay (d2), s/veh	5.3	2.1	2.0	17.0	1.9	1.8	14.6	0.0	0.0	0.3	0.0	0.1
Initial Q Delay(d3),s/veh	0.0	0.0	0.0	0.0	0.0	0.0	0.0	0.0	0.0	0.0	0.0	0.0
%ile BackOfQ(50%),veh/ln	0.4	5.6	5.9	1.5	9.1	9.3	8.5	0.0	0.0	2.4	0.0	0.8
Unsig. Movement Delay, s/veh												
LnGrp Delay(d),s/veh	63.9	8.7	8.7	74.7	14.0	14.0	63.5	0.0	0.0	38.0	0.0	34.9
LnGrp LOS	E	A	A	E	B	B	E	A	A	D	A	C
Approach Vol, veh/h		1802			1290			244			128	
Approach Delay, s/veh		9.0			15.8			63.5			37.2	
Approach LOS		A			B			E			D	

Timer - Assigned Phs	1	2		4	5	6		8
Phs Duration (G+Y+Rc), s	5.5	81.5		33.0	7.7	79.3		33.0
Change Period (Y+Rc), s	4.0	5.0		5.0	4.0	5.0		5.0
Max Green Setting (Gmax), s	9.0	69.0		28.0	9.0	69.0		28.0
Max Q Clear Time (g_c+I1), s	2.7	25.2		8.3	4.7	31.9		29.3
Green Ext Time (p_c), s	0.0	35.2		0.3	0.0	36.5		0.0

Intersection Summary	
HCM 6th Ctrl Delay	16.4
HCM 6th LOS	B

Notes

User approved pedestrian interval to be less than phase max green.

Movement	EBL	EBT	EBR	WBL	WBT	WBR	NBL	NBT	NBR	SBL	SBT	SBR
Lane Configurations												
Traffic Volume (veh/h)	40	1683	10	10	1143	40	20	0	15	35	0	30
Future Volume (veh/h)	40	1683	10	10	1143	40	20	0	15	35	0	30
Initial Q (Qb), veh	0	0	0	0	0	0	0	0	0	0	0	0
Ped-Bike Adj(A_pbT)	1.00		1.00	1.00		1.00	1.00		1.00	1.00		1.00
Parking Bus, Adj	1.00	1.00	1.00	1.00	1.00	1.00	1.00	1.00	1.00	1.00	1.00	1.00
Work Zone On Approach		No			No			No			No	
Adj Sat Flow, veh/h/ln	1856	1856	1856	1870	1870	1870	1781	1781	1781	1900	1900	1900
Adj Flow Rate, veh/h	42	1753	10	10	1191	42	21	0	16	36	0	31
Peak Hour Factor	0.96	0.96	0.96	0.96	0.96	0.96	0.96	0.96	0.96	0.96	0.96	0.96
Percent Heavy Veh, %	3	3	3	2	2	2	8	8	8	0	0	0
Cap, veh/h	64	2427	1082	22	2361	1053	82	0	149	82	0	159
Arrive On Green	0.04	0.69	0.69	0.01	0.66	0.66	0.10	0.00	0.10	0.10	0.00	0.10
Sat Flow, veh/h	1767	3526	1572	1781	3554	1585	7	0	1510	8	0	1610
Grp Volume(v), veh/h	42	1753	10	10	1191	42	21	0	16	36	0	31
Grp Sat Flow(s),veh/h/ln	1767	1763	1572	1781	1777	1585	7	0	1510	8	0	1610
Q Serve(g_s), s	2.1	27.3	0.2	0.5	15.0	0.8	0.0	0.0	0.9	0.0	0.0	1.6
Cycle Q Clear(g_c), s	2.1	27.3	0.2	0.5	15.0	0.8	8.7	0.0	0.9	8.7	0.0	1.6
Prop In Lane	1.00		1.00	1.00		1.00	1.00		1.00	1.00		1.00
Lane Grp Cap(c), veh/h	64	2427	1082	22	2361	1053	82	0	149	82	0	159
V/C Ratio(X)	0.65	0.72	0.01	0.46	0.50	0.04	0.26	0.00	0.11	0.44	0.00	0.20
Avail Cap(c_a), veh/h	181	2711	1209	100	2569	1146	411	0	528	230	0	327
HCM Platoon Ratio	1.00	1.00	1.00	1.00	1.00	1.00	1.00	1.00	1.00	1.00	1.00	1.00
Upstream Filter(I)	1.00	1.00	1.00	1.00	1.00	1.00	1.00	0.00	1.00	1.00	0.00	1.00
Uniform Delay (d), s/veh	42.2	8.6	4.3	43.5	7.5	5.1	44.3	0.0	36.4	44.3	0.0	36.7
Incr Delay (d2), s/veh	10.7	1.2	0.0	14.1	0.4	0.0	1.6	0.0	0.3	7.7	0.0	1.3
Initial Q Delay(d3),s/veh	0.0	0.0	0.0	0.0	0.0	0.0	0.0	0.0	0.0	0.0	0.0	0.0
%ile BackOfQ(50%),veh/ln	1.1	8.8	0.1	0.3	4.9	0.2	0.5	0.0	0.3	1.0	0.0	0.7
Unsig. Movement Delay, s/veh												
LnGrp Delay(d),s/veh	52.9	9.8	4.3	57.6	7.9	5.2	46.0	0.0	36.7	52.1	0.0	38.0
LnGrp LOS	D	A	A	E	A	A	D	A	D	D	A	D
Approach Vol, veh/h		1805			1243			37			67	
Approach Delay, s/veh		10.7			8.2			42.0			45.6	
Approach LOS		B			A			D			D	

Timer - Assigned Phs	1	2		4	5	6		8
Phs Duration (G+Y+Rc), s	9.6	65.3		13.8	7.5	67.5		13.8
Change Period (Y+Rc), s	6.4	6.4		5.0	6.4	6.4		5.0
Max Green Setting (Gmax), s	9.1	64.1		18.0	5.0	68.2		31.0
Max Q Clear Time (g_c+I1), s	4.1	17.0		10.7	2.5	29.3		10.7
Green Ext Time (p_c), s	0.0	24.1		0.2	0.0	31.7		0.1

Intersection Summary			
HCM 6th Ctrl Delay			10.8
HCM 6th LOS			B

Intersection	
Int Delay, s/veh	2.6

Movement	EBL	EBT	WBT	WBR	SBL	SBR
Lane Configurations						
Traffic Vol, veh/h	75	375	60	16	16	74
Future Vol, veh/h	75	375	60	16	16	74
Conflicting Peds, #/hr	0	0	0	0	0	0
Sign Control	Free	Free	Free	Free	Stop	Stop
RT Channelized	-	None	-	None	-	None
Storage Length	450	-	-	-	0	-
Veh in Median Storage, #	-	0	0	-	0	-
Grade, %	-	0	0	-	0	-
Peak Hour Factor	89	89	89	89	89	89
Heavy Vehicles, %	2	2	2	2	49	49
Mvmt Flow	84	421	67	18	18	83

Major/Minor	Major1		Major2		Minor2	
Conflicting Flow All	85	0	-	0	665	76
Stage 1	-	-	-	-	76	-
Stage 2	-	-	-	-	589	-
Critical Hdwy	4.12	-	-	-	6.89	6.69
Critical Hdwy Stg 1	-	-	-	-	5.89	-
Critical Hdwy Stg 2	-	-	-	-	5.89	-
Follow-up Hdwy	2.218	-	-	-	3.941	3.741
Pot Cap-1 Maneuver	1512	-	-	-	360	869
Stage 1	-	-	-	-	841	-
Stage 2	-	-	-	-	473	-
Platoon blocked, %		-	-	-		
Mov Cap-1 Maneuver	1512	-	-	-	340	869
Mov Cap-2 Maneuver	-	-	-	-	340	-
Stage 1	-	-	-	-	794	-
Stage 2	-	-	-	-	473	-

Approach	EB	WB	SB
HCM Control Delay, s	1.3	0	11.2
HCM LOS			B

Minor Lane/Major Mvmt	EBL	EBT	WBT	WBR	SBLn1
Capacity (veh/h)	1512	-	-	-	681
HCM Lane V/C Ratio	0.056	-	-	-	0.148
HCM Control Delay (s)	7.5	-	-	-	11.2
HCM Lane LOS	A	-	-	-	B
HCM 95th %tile Q(veh)	0.2	-	-	-	0.5

Intersection	
Int Delay, s/veh	6

Movement	EBL	EBT	EBR	WBL	WBT	WBR	NBL	NBT	NBR	SBL	SBT	SBR
Lane Configurations												
Traffic Vol, veh/h	0	255	10	5	134	0	90	5	185	5	0	0
Future Vol, veh/h	0	255	10	5	134	0	90	5	185	5	0	0
Conflicting Peds, #/hr	0	0	0	0	0	0	0	0	0	0	0	0
Sign Control	Free	Free	Free	Free	Free	Free	Stop	Stop	Stop	Stop	Stop	Stop
RT Channelized	-	-	None	-	-	None	-	-	None	-	-	None
Storage Length	-	-	-	-	-	-	-	-	-	-	-	-
Veh in Median Storage, #	-	0	-	-	0	-	-	0	-	-	0	-
Grade, %	-	0	-	-	0	-	-	0	-	-	0	-
Peak Hour Factor	89	89	89	89	89	89	89	89	89	89	89	89
Heavy Vehicles, %	4	4	4	30	30	30	1	1	1	0	0	0
Mvmt Flow	0	287	11	6	151	0	101	6	208	6	0	0

Major/Minor	Major1			Major2			Minor1			Minor2		
Conflicting Flow All	151	0	0	298	0	0	456	456	149	310	461	151
Stage 1	-	-	-	-	-	-	293	293	-	163	163	-
Stage 2	-	-	-	-	-	-	163	163	-	147	298	-
Critical Hdwy	4.16	-	-	4.55	-	-	7.315	6.515	6.915	7.3	6.5	6.2
Critical Hdwy Stg 1	-	-	-	-	-	-	6.515	5.515	-	6.1	5.5	-
Critical Hdwy Stg 2	-	-	-	-	-	-	6.115	5.515	-	6.5	5.5	-
Follow-up Hdwy	2.238	-	-	2.485	-	-	3.5095	4.0095	3.3095	3.5	4	3.3
Pot Cap-1 Maneuver	1415	-	-	1100	-	-	503	502	874	635	500	901
Stage 1	-	-	-	-	-	-	694	672	-	844	767	-
Stage 2	-	-	-	-	-	-	841	765	-	847	671	-
Platoon blocked, %		-	-		-	-						
Mov Cap-1 Maneuver	1415	-	-	1100	-	-	500	499	874	478	497	901
Mov Cap-2 Maneuver	-	-	-	-	-	-	500	499	-	478	497	-
Stage 1	-	-	-	-	-	-	694	672	-	844	762	-
Stage 2	-	-	-	-	-	-	836	760	-	640	671	-

Approach	EB	WB	NB	SB
HCM Control Delay, s	0	0.3	14.3	12.6
HCM LOS			B	B

Minor Lane/Major Mvmt	NBLn1	EBL	EBT	EBR	WBL	WBT	WBR	SBLn1
Capacity (veh/h)	697	1415	-	-	1100	-	-	478
HCM Lane V/C Ratio	0.451	-	-	-	0.005	-	-	0.012
HCM Control Delay (s)	14.3	0	-	-	8.3	0	-	12.6
HCM Lane LOS	B	A	-	-	A	A	-	B
HCM 95th %tile Q(veh)	2.4	0	-	-	0	-	-	0

Movement	WBL	WBR	NBT	NBR	SBL	SBT
Lane Configurations						
Traffic Volume (veh/h)	37	181	950	197	87	320
Future Volume (veh/h)	37	181	950	197	87	320
Initial Q (Qb), veh	0	0	0	0	0	0
Ped-Bike Adj(A_pbT)	1.00	1.00		1.00	1.00	
Parking Bus, Adj	1.00	1.00	1.00	1.00	1.00	1.00
Work Zone On Approach	No		No			No
Adj Sat Flow, veh/h/ln	1618	1618	1856	1856	1826	1826
Adj Flow Rate, veh/h	40	195	1022	212	94	344
Peak Hour Factor	0.93	0.93	0.93	0.93	0.93	0.93
Percent Heavy Veh, %	19	19	3	3	5	5
Cap, veh/h	39	188	994	206	115	1354
Arrive On Green	0.16	0.16	0.67	0.67	0.04	0.74
Sat Flow, veh/h	237	1156	1491	309	1739	1826
Grp Volume(v), veh/h	236	0	0	1234	94	344
Grp Sat Flow(s),veh/h/ln	1399	0	0	1800	1739	1826
Q Serve(g_s), s	24.5	0.0	0.0	100.3	3.9	9.0
Cycle Q Clear(g_c), s	24.5	0.0	0.0	100.3	3.9	9.0
Prop In Lane	0.17	0.83		0.17	1.00	
Lane Grp Cap(c), veh/h	228	0	0	1200	115	1354
V/C Ratio(X)	1.04	0.00	0.00	1.03	0.82	0.25
Avail Cap(c_a), veh/h	228	0	0	1200	121	1354
HCM Platoon Ratio	1.00	1.00	1.00	1.00	1.00	1.00
Upstream Filter(I)	1.00	0.00	0.00	1.00	1.00	1.00
Uniform Delay (d), s/veh	63.0	0.0	0.0	25.1	48.9	6.2
Incr Delay (d2), s/veh	69.5	0.0	0.0	33.6	34.7	0.1
Initial Q Delay(d3),s/veh	0.0	0.0	0.0	0.0	0.0	0.0
%ile BackOfQ(50%),veh/ln	13.1	0.0	0.0	50.9	4.7	3.4
Unsig. Movement Delay, s/veh						
LnGrp Delay(d),s/veh	132.5	0.0	0.0	58.7	83.5	6.3
LnGrp LOS	F	A	A	F	F	A
Approach Vol, veh/h	236		1234			438
Approach Delay, s/veh	132.5		58.7			22.9
Approach LOS	F		E			C

Timer - Assigned Phs	1	2				6	8
Phs Duration (G+Y+Rc), s	11.3	108.4				119.7	30.8
Change Period (Y+Rc), s	5.5	* 8.1				* 8.1	6.3
Max Green Setting (Gmax), s	6.3	* 1E2				* 1.1E2	24.5
Max Q Clear Time (g_c+I1), s	5.9	102.3				11.0	26.5
Green Ext Time (p_c), s	0.0	0.0				3.5	0.0

Intersection Summary	
HCM 6th Ctrl Delay	59.6
HCM 6th LOS	E

Notes

User approved pedestrian interval to be less than phase max green.

User approved volume balancing among the lanes for turning movement.

* HCM 6th computational engine requires equal clearance times for the phases crossing the barrier.

Movement	EBL	EBR	NBL	NBT	SBT	SBR
Lane Configurations						
Traffic Volume (vph)	75	55	80	1305	160	45
Future Volume (vph)	75	55	80	1305	160	45
Ideal Flow (vphpl)	1900	1900	1900	1900	1900	1900
Total Lost time (s)	5.0	5.0	6.5	6.5	6.5	6.5
Lane Util. Factor	1.00	1.00	1.00	1.00	1.00	1.00
Frt	1.00	0.85	1.00	1.00	1.00	0.85
Flt Protected	0.95	1.00	0.95	1.00	1.00	1.00
Satd. Flow (prot)	1641	1468	1752	1845	1743	1482
Flt Permitted	0.95	1.00	0.56	1.00	1.00	1.00
Satd. Flow (perm)	1641	1468	1039	1845	1743	1482
Peak-hour factor, PHF	0.92	0.92	0.92	0.92	0.92	0.92
Adj. Flow (vph)	82	60	87	1418	174	49
RTOR Reduction (vph)	0	54	0	0	0	20
Lane Group Flow (vph)	82	6	87	1418	174	29
Heavy Vehicles (%)	10%	10%	3%	3%	9%	9%
Turn Type	custom	custom	pm+pt	NA	NA	Perm
Protected Phases	3	3	5	2	6	
Permitted Phases	4	4	2			6
Actuated Green, G (s)	6.7	6.7	54.4	54.4	43.4	43.4
Effective Green, g (s)	6.7	6.7	54.4	54.4	43.4	43.4
Actuated g/C Ratio	0.09	0.09	0.75	0.75	0.60	0.60
Clearance Time (s)	5.0	5.0	6.5	6.5	6.5	6.5
Vehicle Extension (s)	2.0	2.0	2.0	5.0	5.0	5.0
Lane Grp Cap (vph)	151	135	822	1382	1041	885
v/s Ratio Prot	c0.05	0.00	0.01	c0.77	0.10	
v/s Ratio Perm			0.07			0.02
v/c Ratio	0.54	0.04	0.11	1.03	0.17	0.03
Uniform Delay, d1	31.5	30.0	2.7	9.1	6.5	6.0
Progression Factor	1.00	1.00	1.00	1.00	1.00	1.00
Incremental Delay, d2	2.1	0.0	0.0	31.1	0.2	0.0
Delay (s)	33.6	30.1	2.7	40.2	6.7	6.0
Level of Service	C	C	A	D	A	A
Approach Delay (s)	32.1			38.0	6.5	
Approach LOS	C			D	A	

Intersection Summary			
HCM 2000 Control Delay	33.8	HCM 2000 Level of Service	C
HCM 2000 Volume to Capacity ratio	1.15		
Actuated Cycle Length (s)	72.6	Sum of lost time (s)	21.0
Intersection Capacity Utilization	82.4%	ICU Level of Service	E
Analysis Period (min)	15		
c Critical Lane Group			

Movement	EBL	EBR	NBL	NBT	SBT	SBR
Lane Configurations						
Traffic Volume (vph)	315	11	26	1020	130	45
Future Volume (vph)	315	11	26	1020	130	45
Ideal Flow (vphpl)	1900	1900	1900	1900	1900	1900
Total Lost time (s)	5.0	5.0	6.0	6.0	6.0	5.0
Lane Util. Factor	1.00	1.00	1.00	1.00	1.00	1.00
Frt	1.00	0.85	1.00	1.00	1.00	0.85
Flt Protected	0.95	1.00	0.95	1.00	1.00	1.00
Satd. Flow (prot)	1770	1583	1752	1845	1810	1538
Flt Permitted	0.95	1.00	0.63	1.00	1.00	1.00
Satd. Flow (perm)	1770	1583	1169	1845	1810	1538
Peak-hour factor, PHF	0.91	0.91	0.91	0.91	0.91	0.91
Adj. Flow (vph)	346	12	29	1121	143	49
RTOR Reduction (vph)	0	9	0	0	0	6
Lane Group Flow (vph)	346	3	29	1121	143	43
Heavy Vehicles (%)	2%	2%	3%	3%	5%	5%
Turn Type	custom	custom	pm+pt	NA	NA	pm+ov
Protected Phases	3	3	5	2	6	3
Permitted Phases	4	4	2			6
Actuated Green, G (s)	40.7	40.7	128.3	128.3	117.7	158.4
Effective Green, g (s)	40.7	40.7	128.3	128.3	117.7	158.4
Actuated g/C Ratio	0.23	0.23	0.71	0.71	0.65	0.88
Clearance Time (s)	5.0	5.0	6.0	6.0	6.0	5.0
Vehicle Extension (s)	2.0	2.0	2.0	2.0	2.0	2.0
Lane Grp Cap (vph)	400	357	848	1315	1183	1353
v/s Ratio Prot	c0.20	0.00	0.00	c0.61	0.08	0.01
v/s Ratio Perm			0.02			0.02
v/c Ratio	0.86	0.01	0.03	0.85	0.12	0.03
Uniform Delay, d1	67.0	54.0	7.7	18.9	11.7	1.3
Progression Factor	1.00	1.00	1.00	1.00	1.00	1.00
Incremental Delay, d2	16.9	0.0	0.0	7.1	0.2	0.0
Delay (s)	83.9	54.0	7.7	26.1	11.9	1.3
Level of Service	F	D	A	C	B	A
Approach Delay (s)	82.9			25.6	9.2	
Approach LOS	F			C	A	

Intersection Summary			
HCM 2000 Control Delay	35.8	HCM 2000 Level of Service	D
HCM 2000 Volume to Capacity ratio	0.90		
Actuated Cycle Length (s)	180.0	Sum of lost time (s)	20.0
Intersection Capacity Utilization	80.3%	ICU Level of Service	D
Analysis Period (min)	15		
c Critical Lane Group			

Intersection	
Int Delay, s/veh	0.7

Movement	EBL	EBT	EBR	WBL	WBT	WBR	NBL	NBT	NBR	SBL	SBT	SBR
Lane Configurations												
Traffic Vol, veh/h	0	0	0	15	0	10	10	956	0	0	45	96
Future Vol, veh/h	0	0	0	15	0	10	10	956	0	0	45	96
Conflicting Peds, #/hr	0	0	0	0	0	0	0	0	0	0	0	0
Sign Control	Stop	Stop	Stop	Stop	Stop	Stop	Free	Free	Free	Free	Free	Free
RT Channelized	-	-	None	-	-	None	-	-	None	-	-	None
Storage Length	-	-	-	-	-	500	175	-	-	-	-	375
Veh in Median Storage, #	-	1	-	-	0	-	-	0	-	-	0	-
Grade, %	-	0	-	-	0	-	-	0	-	-	0	-
Peak Hour Factor	83	83	83	83	83	83	83	83	83	83	83	83
Heavy Vehicles, %	0	0	0	19	19	19	3	3	3	4	4	4
Mvmt Flow	0	0	0	18	0	12	12	1152	0	0	54	116

Major/Minor	Minor1			Major1			Major2		
Conflicting Flow All	1288	1346	1152	170	0	-	-	-	0
Stage 1	1176	1176	-	-	-	-	-	-	-
Stage 2	112	170	-	-	-	-	-	-	-
Critical Hdwy	6.59	6.69	6.39	4.13	-	-	-	-	-
Critical Hdwy Stg 1	5.59	5.69	-	-	-	-	-	-	-
Critical Hdwy Stg 2	5.59	5.69	-	-	-	-	-	-	-
Follow-up Hdwy	3.671	4.171	3.471	2.227	-	-	-	-	-
Pot Cap-1 Maneuver	167	140	222	1401	-	0	0	-	-
Stage 1	271	246	-	-	-	0	0	-	-
Stage 2	872	727	-	-	-	0	0	-	-
Platoon blocked, %					-			-	-
Mov Cap-1 Maneuver	165	0	222	1401	-	-	-	-	-
Mov Cap-2 Maneuver	165	0	-	-	-	-	-	-	-
Stage 1	269	0	-	-	-	-	-	-	-
Stage 2	872	0	-	-	-	-	-	-	-

Approach	WB	NB	SB
HCM Control Delay, s	26.5	0.1	0
HCM LOS	D		

Minor Lane/Major Mvmt	NBL	NBT	WBLn1	WBLn2	SBT	SBR
Capacity (veh/h)	1401	-	165	222	-	-
HCM Lane V/C Ratio	0.009	-	0.11	0.054	-	-
HCM Control Delay (s)	7.6	-	29.5	22.1	-	-
HCM Lane LOS	A	-	D	C	-	-
HCM 95th %tile Q(veh)	0	-	0.4	0.2	-	-

Movement	EBL	EBR	NBL	NBT	SBT	SBR
Lane Configurations						
Traffic Volume (veh/h)	611	10	80	345	60	5
Future Volume (veh/h)	611	10	80	345	60	5
Initial Q (Qb), veh	0	0	0	0	0	0
Ped-Bike Adj(A_pbT)	1.00	1.00	1.00			1.00
Parking Bus, Adj	1.00	1.00	1.00	1.00	1.00	1.00
Work Zone On Approach	No			No	No	
Adj Sat Flow, veh/h/ln	1856	1856	1870	1870	1811	1811
Adj Flow Rate, veh/h	745	12	98	421	73	6
Peak Hour Factor	0.82	0.82	0.82	0.82	0.82	0.82
Percent Heavy Veh, %	3	3	2	2	6	6
Cap, veh/h	806	717	157	569	630	52
Arrive On Green	0.46	0.46	0.38	0.38	0.38	0.38
Sat Flow, veh/h	1767	1572	267	1492	1651	136
Grp Volume(v), veh/h	745	12	519	0	0	79
Grp Sat Flow(s),veh/h/ln	1767	1572	1759	0	0	1787
Q Serve(g_s), s	30.7	0.3	14.4	0.0	0.0	2.2
Cycle Q Clear(g_c), s	30.7	0.3	19.9	0.0	0.0	2.2
Prop In Lane	1.00	1.00	0.19			0.08
Lane Grp Cap(c), veh/h	806	717	726	0	0	681
V/C Ratio(X)	0.92	0.02	0.71	0.00	0.00	0.12
Avail Cap(c_a), veh/h	1110	988	1378	0	0	777
HCM Platoon Ratio	1.00	1.00	1.00	1.00	1.00	1.00
Upstream Filter(I)	1.00	1.00	1.00	0.00	0.00	1.00
Uniform Delay (d), s/veh	19.8	11.6	20.8	0.0	0.0	15.5
Incr Delay (d2), s/veh	10.2	0.0	2.8	0.0	0.0	0.2
Initial Q Delay(d3),s/veh	0.0	0.0	0.0	0.0	0.0	0.0
%ile BackOfQ(50%),veh/ln	13.6	0.1	8.2	0.0	0.0	0.9
Unsig. Movement Delay, s/veh						
LnGrp Delay(d),s/veh	30.0	11.6	23.7	0.0	0.0	15.7
LnGrp LOS	C	B	C	A	A	B
Approach Vol, veh/h	757			519	79	
Approach Delay, s/veh	29.7			23.7	15.7	
Approach LOS	C			C	B	

Timer - Assigned Phs		2		4		6
Phs Duration (G+Y+Rc), s		35.9		41.7		35.9
Change Period (Y+Rc), s		6.3		6.3		6.3
Max Green Setting (Gmax), s		58.7		48.7		33.7
Max Q Clear Time (g_c+I1), s		21.9		32.7		4.2
Green Ext Time (p_c), s		7.7		2.6		0.7

Intersection Summary	
HCM 6th Ctrl Delay	26.6
HCM 6th LOS	C

Movement	EBL	EBT	EBR	WBL	WBT	WBR	NBL	NBT	NBR	SBL	SBT	SBR
Lane Configurations												
Traffic Volume (veh/h)	160	10	20	5	0	5	5	1111	0	5	402	65
Future Volume (veh/h)	160	10	20	5	0	5	5	1111	0	5	402	65
Initial Q (Qb), veh	0	0	0	0	0	0	0	0	0	0	0	0
Ped-Bike Adj(A_pbT)	1.00		0.98	1.00		1.00	1.00		1.00	1.00		1.00
Parking Bus, Adj	1.00	1.00	1.00	1.00	1.00	1.00	1.00	1.00	1.00	1.00	1.00	1.00
Work Zone On Approach		No			No			No			No	
Adj Sat Flow, veh/h/ln	1885	1885	1885	1693	1693	1693	1752	1752	1752	1648	1648	1648
Adj Flow Rate, veh/h	174	11	22	5	0	5	5	1208	0	5	437	71
Peak Hour Factor	0.92	0.92	0.92	0.92	0.92	0.92	0.92	0.92	0.92	0.92	0.92	0.92
Percent Heavy Veh, %	1	1	1	14	14	14	10	10	10	17	17	17
Cap, veh/h	210	10	21	268	0	253	529	1191	0	58	1121	950
Arrive On Green	0.13	0.13	0.13	0.00	0.00	0.18	0.00	0.68	0.00	0.00	0.68	0.68
Sat Flow, veh/h	1223	77	155	1612	0	1434	1668	1752	0	1570	1648	1397
Grp Volume(v), veh/h	207	0	0	5	0	5	5	1208	0	5	437	71
Grp Sat Flow(s),veh/h/ln	1455	0	0	1612	0	1434	1668	1752	0	1570	1648	1397
Q Serve(g_s), s	18.6	0.0	0.0	0.4	0.0	0.4	0.1	94.9	0.0	0.1	16.1	2.4
Cycle Q Clear(g_c), s	18.6	0.0	0.0	0.4	0.0	0.4	0.1	94.9	0.0	0.1	16.1	2.4
Prop In Lane	0.84		0.11	1.00		1.00	1.00		0.00	1.00		1.00
Lane Grp Cap(c), veh/h	241	0	0	268	0	253	529	1191	0	58	1121	950
V/C Ratio(X)	0.86	0.00	0.00	0.02	0.00	0.02	0.01	1.01	0.00	0.09	0.39	0.07
Avail Cap(c_a), veh/h	241	0	0	348	0	335	571	1191	0	97	1121	950
HCM Platoon Ratio	1.00	1.00	1.00	1.00	1.00	1.00	1.00	1.00	1.00	1.00	1.00	1.00
Upstream Filter(I)	1.00	0.00	0.00	1.00	0.00	1.00	1.00	1.00	0.00	1.00	1.00	1.00
Uniform Delay (d), s/veh	61.1	0.0	0.0	50.4	0.0	47.5	7.9	22.3	0.0	39.3	9.7	7.5
Incr Delay (d2), s/veh	25.7	0.0	0.0	0.0	0.0	0.0	0.0	29.6	0.0	0.6	0.5	0.1
Initial Q Delay(d3),s/veh	0.0	0.0	0.0	0.0	0.0	0.0	0.0	0.0	0.0	0.0	0.0	0.0
%ile BackOfQ(50%),veh/ln	9.1	0.0	0.0	0.2	0.0	0.1	0.0	45.2	0.0	0.1	5.8	0.7
Unsig. Movement Delay, s/veh												
LnGrp Delay(d),s/veh	86.8	0.0	0.0	50.4	0.0	47.5	7.9	51.9	0.0	39.9	10.2	7.6
LnGrp LOS	F	A	A	D	A	D	A	F	A	D	B	A
Approach Vol, veh/h		207			10			1213			513	
Approach Delay, s/veh		86.8			49.0			51.8			10.1	
Approach LOS		F			D			D			B	

Timer - Assigned Phs	1	2	3	4	5	6		8
Phs Duration (G+Y+Rc), s	6.0	102.0	6.0	25.5	6.0	102.0		31.5
Change Period (Y+Rc), s	5.5	7.1	5.5	6.9	5.5	7.1		* 6.9
Max Green Setting (Gmax), s	4.0	94.9	7.5	18.6	4.0	94.9		* 33
Max Q Clear Time (g_c+I1), s	2.1	96.9	2.4	20.6	2.1	18.1		2.4
Green Ext Time (p_c), s	0.0	0.0	0.0	0.0	0.0	7.5		0.0

Intersection Summary	
HCM 6th Ctrl Delay	44.5
HCM 6th LOS	D

Notes

* HCM 6th computational engine requires equal clearance times for the phases crossing the barrier.

Intersection	
Int Delay, s/veh	4.3

Movement	EBL	EBT	WBT	WBR	SBL	SBR
Lane Configurations						
Traffic Vol, veh/h	78	95	95	16	11	74
Future Vol, veh/h	78	95	95	16	11	74
Conflicting Peds, #/hr	0	0	0	0	0	0
Sign Control	Free	Free	Free	Free	Stop	Stop
RT Channelized	-	None	-	None	-	None
Storage Length	450	-	-	-	0	-
Veh in Median Storage, #	-	0	0	-	0	-
Grade, %	-	0	0	-	0	-
Peak Hour Factor	82	82	82	82	82	82
Heavy Vehicles, %	86	86	77	77	54	54
Mvmt Flow	95	116	116	20	13	90

Major/Minor	Major1		Major2		Minor2	
Conflicting Flow All	136	0	-	0	432	126
Stage 1	-	-	-	-	126	-
Stage 2	-	-	-	-	306	-
Critical Hdwy	4.96	-	-	-	6.94	6.74
Critical Hdwy Stg 1	-	-	-	-	5.94	-
Critical Hdwy Stg 2	-	-	-	-	5.94	-
Follow-up Hdwy	2.974	-	-	-	3.986	3.786
Pot Cap-1 Maneuver	1061	-	-	-	494	802
Stage 1	-	-	-	-	786	-
Stage 2	-	-	-	-	643	-
Platoon blocked, %		-	-	-		
Mov Cap-1 Maneuver	1061	-	-	-	450	802
Mov Cap-2 Maneuver	-	-	-	-	450	-
Stage 1	-	-	-	-	715	-
Stage 2	-	-	-	-	643	-

Approach	EB	WB	SB
HCM Control Delay, s	3.9	0	10.8
HCM LOS			B

Minor Lane/Major Mvmt	EBL	EBT	WBT	WBR	SBLn1
Capacity (veh/h)	1061	-	-	-	728
HCM Lane V/C Ratio	0.09	-	-	-	0.142
HCM Control Delay (s)	8.7	-	-	-	10.8
HCM Lane LOS	A	-	-	-	B
HCM 95th %tile Q(veh)	0.3	-	-	-	0.5

Intersection	
Int Delay, s/veh	4.1

Movement	EBL	EBT	EBR	WBL	WBT	WBR	NBL	NBT	NBR	SBL	SBT	SBR
Lane Configurations												
Traffic Vol, veh/h	35	168	40	15	159	5	50	0	10	5	10	35
Future Vol, veh/h	35	168	40	15	159	5	50	0	10	5	10	35
Conflicting Peds, #/hr	0	0	0	0	0	0	0	0	0	0	0	0
Sign Control	Free	Free	Free	Free	Free	Free	Stop	Stop	Stop	Stop	Stop	Stop
RT Channelized	-	-	None	-	-	None	-	-	None	-	-	None
Storage Length	-	-	-	-	-	-	-	-	-	-	-	-
Veh in Median Storage, #	-	0	-	-	0	-	-	0	-	-	0	-
Grade, %	-	0	-	-	0	-	-	0	-	-	0	-
Peak Hour Factor	82	82	82	82	82	82	82	82	82	82	82	82
Heavy Vehicles, %	36	36	36	30	30	30	35	35	35	91	91	91
Mvmt Flow	43	205	49	18	194	6	61	0	12	6	12	43

Major/Minor	Major1			Major2			Minor1			Minor2		
Conflicting Flow All	200	0	0	254	0	0	577	552	127	422	573	197
Stage 1	-	-	-	-	-	-	316	316	-	233	233	-
Stage 2	-	-	-	-	-	-	261	236	-	189	340	-
Critical Hdwy	4.64	-	-	4.55	-	-	7.825	7.025	7.425	8.665	7.865	7.565
Critical Hdwy Stg 1	-	-	-	-	-	-	7.025	6.025	-	7.465	6.865	-
Critical Hdwy Stg 2	-	-	-	-	-	-	6.625	6.025	-	7.865	6.865	-
Follow-up Hdwy	2.542	-	-	2.485	-	-	3.8325	4.3325	3.6325	4.3645	4.8645	4.1645
Pot Cap-1 Maneuver	1173	-	-	1146	-	-	359	387	813	382	304	639
Stage 1	-	-	-	-	-	-	597	589	-	584	553	-
Stage 2	-	-	-	-	-	-	666	643	-	611	483	-
Platoon blocked, %		-	-		-	-						
Mov Cap-1 Maneuver	1173	-	-	1146	-	-	309	364	813	359	286	639
Mov Cap-2 Maneuver	-	-	-	-	-	-	309	364	-	359	286	-
Stage 1	-	-	-	-	-	-	571	564	-	559	543	-
Stage 2	-	-	-	-	-	-	597	631	-	576	462	-

Approach	EB	WB	NB	SB
HCM Control Delay, s	1.2	0.7	18.2	13.5
HCM LOS			C	B

Minor Lane/Major Mvmt	NBLn1	EBL	EBT	EBR	WBL	WBT	WBR	SBLn1
Capacity (veh/h)	345	1173	-	-	1146	-	-	482
HCM Lane V/C Ratio	0.212	0.036	-	-	0.016	-	-	0.127
HCM Control Delay (s)	18.2	8.2	0.1	-	8.2	0	-	13.5
HCM Lane LOS	C	A	A	-	A	A	-	B
HCM 95th %tile Q(veh)	0.8	0.1	-	-	0	-	-	0.4

Movement	WBL	WBR	NBT	NBR	SBL	SBT
Lane Configurations						
Traffic Volume (veh/h)	82	166	430	108	149	440
Future Volume (veh/h)	82	166	430	108	149	440
Initial Q (Qb), veh	0	0	0	0	0	0
Ped-Bike Adj(A_pbT)	1.00	1.00		1.00	1.00	
Parking Bus, Adj	1.00	1.00	1.00	1.00	1.00	1.00
Work Zone On Approach	No		No			No
Adj Sat Flow, veh/h/ln	1233	1233	1796	1796	1678	1678
Adj Flow Rate, veh/h	89	180	467	117	162	478
Peak Hour Factor	0.92	0.92	0.92	0.92	0.92	0.92
Percent Heavy Veh, %	45	45	7	7	15	15
Cap, veh/h	98	198	510	128	255	872
Arrive On Green	0.27	0.27	0.37	0.37	0.07	0.52
Sat Flow, veh/h	358	723	1386	347	1598	1678
Grp Volume(v), veh/h	270	0	0	584	162	478
Grp Sat Flow(s),veh/h/ln	1085	0	0	1734	1598	1678
Q Serve(g_s), s	16.8	0.0	0.0	22.4	4.2	13.3
Cycle Q Clear(g_c), s	16.8	0.0	0.0	22.4	4.2	13.3
Prop In Lane	0.33	0.67		0.20	1.00	
Lane Grp Cap(c), veh/h	297	0	0	637	255	872
V/C Ratio(X)	0.91	0.00	0.00	0.92	0.64	0.55
Avail Cap(c_a), veh/h	369	0	0	672	255	888
HCM Platoon Ratio	1.00	1.00	1.00	1.00	1.00	1.00
Upstream Filter(I)	1.00	0.00	0.00	1.00	1.00	1.00
Uniform Delay (d), s/veh	24.5	0.0	0.0	21.0	16.0	11.2
Incr Delay (d2), s/veh	22.6	0.0	0.0	17.4	5.9	0.9
Initial Q Delay(d3),s/veh	0.0	0.0	0.0	0.0	0.0	0.0
%ile BackOfQ(50%),veh/ln	5.9	0.0	0.0	11.3	1.7	4.5
Unsig. Movement Delay, s/veh						
LnGrp Delay(d),s/veh	47.1	0.0	0.0	38.4	22.0	12.1
LnGrp LOS	D	A	A	D	C	B
Approach Vol, veh/h	270		584			640
Approach Delay, s/veh	47.1		38.4			14.6
Approach LOS	D		D			B

Timer - Assigned Phs	1	2				6	8
Phs Duration (G+Y+Rc), s	10.6	33.7				44.3	25.4
Change Period (Y+Rc), s	5.5	* 8.1				* 8.1	6.3
Max Green Setting (Gmax), s	5.1	* 27				* 37	23.7
Max Q Clear Time (g_c+I1), s	6.2	24.4				15.3	18.8
Green Ext Time (p_c), s	0.0	1.2				4.4	0.4

Intersection Summary	
HCM 6th Ctrl Delay	29.8
HCM 6th LOS	C

Notes

User approved pedestrian interval to be less than phase max green.

User approved volume balancing among the lanes for turning movement.

* HCM 6th computational engine requires equal clearance times for the phases crossing the barrier.

Movement	EBL	EBR	NBL	NBT	SBT	SBR
Lane Configurations						
Traffic Volume (vph)	70	70	90	435	375	90
Future Volume (vph)	70	70	90	435	375	90
Ideal Flow (vphpl)	1900	1900	1900	1900	1900	1900
Total Lost time (s)	5.0	5.0	6.5	6.5	6.5	6.5
Lane Util. Factor	1.00	1.00	1.00	1.00	1.00	1.00
Frt	1.00	0.85	1.00	1.00	1.00	0.85
Flt Protected	0.95	1.00	0.95	1.00	1.00	1.00
Satd. Flow (prot)	1671	1495	1719	1810	1792	1524
Flt Permitted	0.95	1.00	0.39	1.00	1.00	1.00
Satd. Flow (perm)	1671	1495	698	1810	1792	1524
Peak-hour factor, PHF	0.96	0.96	0.96	0.96	0.96	0.96
Adj. Flow (vph)	73	73	94	453	391	94
RTOR Reduction (vph)	0	65	0	0	0	44
Lane Group Flow (vph)	73	8	94	453	391	50
Heavy Vehicles (%)	8%	8%	5%	5%	6%	6%
Turn Type	custom	custom	pm+pt	NA	NA	Perm
Protected Phases	3	3	5	2	6	
Permitted Phases	4	4	2			6
Actuated Green, G (s)	5.5	5.5	34.9	34.9	22.9	22.9
Effective Green, g (s)	5.5	5.5	34.9	34.9	22.9	22.9
Actuated g/C Ratio	0.11	0.11	0.67	0.67	0.44	0.44
Clearance Time (s)	5.0	5.0	6.5	6.5	6.5	6.5
Vehicle Extension (s)	2.0	2.0	2.0	5.0	5.0	5.0
Lane Grp Cap (vph)	177	158	577	1217	790	672
v/s Ratio Prot	c0.04	0.01	0.02	c0.25	c0.22	
v/s Ratio Perm			0.09			0.03
v/c Ratio	0.41	0.05	0.16	0.37	0.49	0.08
Uniform Delay, d1	21.7	20.8	3.6	3.7	10.4	8.4
Progression Factor	1.00	1.00	1.00	1.00	1.00	1.00
Incremental Delay, d2	0.6	0.0	0.0	0.4	1.0	0.1
Delay (s)	22.3	20.9	3.7	4.1	11.4	8.5
Level of Service	C	C	A	A	B	A
Approach Delay (s)	21.6			4.0	10.8	
Approach LOS	C			A	B	

Intersection Summary			
HCM 2000 Control Delay	9.0	HCM 2000 Level of Service	A
HCM 2000 Volume to Capacity ratio	0.55		
Actuated Cycle Length (s)	51.9	Sum of lost time (s)	21.0
Intersection Capacity Utilization	43.9%	ICU Level of Service	A
Analysis Period (min)	15		
c Critical Lane Group			

Movement	EBL	EBR	NBL	NBT	SBT	SBR
Lane Configurations						
Traffic Volume (vph)	145	16	16	340	290	115
Future Volume (vph)	145	16	16	340	290	115
Ideal Flow (vphpl)	1900	1900	1900	1900	1900	1900
Total Lost time (s)	5.0	5.0	6.0	6.0	6.0	5.0
Lane Util. Factor	1.00	1.00	1.00	1.00	1.00	1.00
Frpb, ped/bikes	1.00	1.00	1.00	1.00	1.00	0.99
Flpb, ped/bikes	1.00	1.00	1.00	1.00	1.00	1.00
Frt	1.00	0.85	1.00	1.00	1.00	0.85
Flt Protected	0.95	1.00	0.95	1.00	1.00	1.00
Satd. Flow (prot)	1671	1495	1736	1827	1792	1505
Flt Permitted	0.95	1.00	0.40	1.00	1.00	1.00
Satd. Flow (perm)	1671	1495	731	1827	1792	1505
Peak-hour factor, PHF	0.95	0.95	0.95	0.95	0.95	0.95
Adj. Flow (vph)	153	17	17	358	305	121
RTOR Reduction (vph)	0	13	0	0	0	53
Lane Group Flow (vph)	153	4	17	358	305	68
Confl. Bikes (#/hr)						1
Heavy Vehicles (%)	8%	8%	4%	4%	6%	6%
Turn Type	custom	custom	pm+pt	NA	NA	pm+ov
Protected Phases	3	3	5	2	6	3
Permitted Phases	4	4	2			6
Actuated Green, G (s)	9.2	9.2	20.6	20.6	13.8	23.0
Effective Green, g (s)	9.2	9.2	20.6	20.6	13.8	23.0
Actuated g/C Ratio	0.23	0.23	0.50	0.50	0.34	0.56
Clearance Time (s)	5.0	5.0	6.0	6.0	6.0	5.0
Vehicle Extension (s)	2.0	2.0	2.0	2.0	2.0	2.0
Lane Grp Cap (vph)	376	337	388	922	606	848
v/s Ratio Prot	c0.09	0.00	0.00	c0.20	c0.17	0.02
v/s Ratio Perm			0.02			0.03
v/c Ratio	0.41	0.01	0.04	0.39	0.50	0.08
Uniform Delay, d1	13.5	12.3	5.5	6.2	10.8	4.1
Progression Factor	1.00	1.00	1.00	1.00	1.00	1.00
Incremental Delay, d2	0.3	0.0	0.0	0.1	0.2	0.0
Delay (s)	13.7	12.3	5.5	6.3	11.0	4.1
Level of Service	B	B	A	A	B	A
Approach Delay (s)	13.6			6.3	9.0	
Approach LOS	B			A	A	

Intersection Summary			
HCM 2000 Control Delay	8.8	HCM 2000 Level of Service	A
HCM 2000 Volume to Capacity ratio	0.59		
Actuated Cycle Length (s)	40.8	Sum of lost time (s)	20.0
Intersection Capacity Utilization	35.1%	ICU Level of Service	A
Analysis Period (min)	15		

c Critical Lane Group

Intersection	
Int Delay, s/veh	1.1

Movement	EBL	EBT	EBR	WBL	WBT	WBR	NBL	NBT	NBR	SBL	SBT	SBR
Lane Configurations												
Traffic Vol, veh/h	0	0	0	25	0	15	20	236	0	0	100	171
Future Vol, veh/h	0	0	0	25	0	15	20	236	0	0	100	171
Conflicting Peds, #/hr	0	0	0	0	0	0	0	0	0	0	0	0
Sign Control	Stop	Stop	Stop	Stop	Stop	Stop	Free	Free	Free	Free	Free	Free
RT Channelized	-	-	None	-	-	None	-	-	None	-	-	None
Storage Length	-	-	-	-	-	500	175	-	-	-	-	375
Veh in Median Storage, #	-	1	-	-	0	-	-	0	-	-	0	-
Grade, %	-	0	-	-	0	-	-	0	-	-	0	-
Peak Hour Factor	92	92	92	92	92	92	92	92	92	92	92	92
Heavy Vehicles, %	0	0	0	7	7	7	6	6	6	4	4	4
Mvmt Flow	0	0	0	27	0	16	22	257	0	0	109	186

Major/Minor	Minor1		Major1			Major2			
Conflicting Flow All	503	596	257	295	0	-	-	-	0
Stage 1	301	301	-	-	-	-	-	-	-
Stage 2	202	295	-	-	-	-	-	-	-
Critical Hdwy	6.47	6.57	6.27	4.16	-	-	-	-	-
Critical Hdwy Stg 1	5.47	5.57	-	-	-	-	-	-	-
Critical Hdwy Stg 2	5.47	5.57	-	-	-	-	-	-	-
Follow-up Hdwy	3.563	4.063	3.363	2.254	-	-	-	-	-
Pot Cap-1 Maneuver	519	410	770	1244	-	0	0	-	-
Stage 1	740	656	-	-	-	0	0	-	-
Stage 2	820	660	-	-	-	0	0	-	-
Platoon blocked, %					-			-	-
Mov Cap-1 Maneuver	510	0	770	1244	-	-	-	-	-
Mov Cap-2 Maneuver	510	0	-	-	-	-	-	-	-
Stage 1	727	0	-	-	-	-	-	-	-
Stage 2	820	0	-	-	-	-	-	-	-

Approach	WB	NB	SB
HCM Control Delay, s	11.5	0.6	0
HCM LOS	B		

Minor Lane/Major Mvmt	NBL	NBT	WBLn1	WBLn2	SBT	SBR
Capacity (veh/h)	1244	-	510	770	-	-
HCM Lane V/C Ratio	0.017	-	0.053	0.021	-	-
HCM Control Delay (s)	7.9	-	12.5	9.8	-	-
HCM Lane LOS	A	-	B	A	-	-
HCM 95th %tile Q(veh)	0.1	-	0.2	0.1	-	-

Movement	EBL	EBR	NBL	NBT	SBT	SBR
Lane Configurations						
Traffic Volume (veh/h)	166	10	25	110	115	15
Future Volume (veh/h)	166	10	25	110	115	15
Initial Q (Qb), veh	0	0	0	0	0	0
Ped-Bike Adj(A_pbT)	1.00	1.00	1.00			0.98
Parking Bus, Adj	1.00	1.00	1.00	1.00	1.00	1.00
Work Zone On Approach	No			No	No	
Adj Sat Flow, veh/h/ln	1841	1841	1811	1811	1752	1752
Adj Flow Rate, veh/h	191	11	29	126	132	17
Peak Hour Factor	0.87	0.87	0.87	0.87	0.87	0.87
Percent Heavy Veh, %	4	4	6	6	10	10
Cap, veh/h	397	353	233	259	296	38
Arrive On Green	0.23	0.23	0.20	0.20	0.20	0.20
Sat Flow, veh/h	1753	1560	188	1325	1516	195
Grp Volume(v), veh/h	191	11	155	0	0	149
Grp Sat Flow(s),veh/h/ln	1753	1560	1513	0	0	1712
Q Serve(g_s), s	2.1	0.1	0.5	0.0	0.0	1.7
Cycle Q Clear(g_c), s	2.1	0.1	2.2	0.0	0.0	1.7
Prop In Lane	1.00	1.00	0.19			0.11
Lane Grp Cap(c), veh/h	397	353	492	0	0	335
V/C Ratio(X)	0.48	0.03	0.32	0.00	0.00	0.45
Avail Cap(c_a), veh/h	3916	3484	4620	0	0	2646
HCM Platoon Ratio	1.00	1.00	1.00	1.00	1.00	1.00
Upstream Filter(I)	1.00	1.00	1.00	0.00	0.00	1.00
Uniform Delay (d), s/veh	7.3	6.6	7.8	0.0	0.0	7.7
Incr Delay (d2), s/veh	0.9	0.0	0.8	0.0	0.0	2.0
Initial Q Delay(d3),s/veh	0.0	0.0	0.0	0.0	0.0	0.0
%ile BackOfQ(50%),veh/ln	0.5	0.0	0.4	0.0	0.0	0.5
Unsig. Movement Delay, s/veh						
LnGrp Delay(d),s/veh	8.2	6.6	8.6	0.0	0.0	9.7
LnGrp LOS	A	A	A	A	A	A
Approach Vol, veh/h	202			155	149	
Approach Delay, s/veh	8.1			8.6	9.7	
Approach LOS	A			A	A	

Timer - Assigned Phs		2		4		6
Phs Duration (G+Y+Rc), s		10.6		11.2		10.6
Change Period (Y+Rc), s		6.3		6.3		6.3
Max Green Setting (Gmax), s		58.7		48.7		33.7
Max Q Clear Time (g_c+I1), s		4.2		4.1		3.7
Green Ext Time (p_c), s		2.0		0.6		1.6

Intersection Summary	
HCM 6th Ctrl Delay	8.7
HCM 6th LOS	A

Movement	EBL	EBT	EBR	WBL	WBT	WBR	NBL	NBT	NBR	SBL	SBT	SBR
Lane Configurations												
Traffic Volume (veh/h)	90	10	15	5	0	10	15	586	10	15	554	85
Future Volume (veh/h)	90	10	15	5	0	10	15	586	10	15	554	85
Initial Q (Qb), veh	0	0	0	0	0	0	0	0	0	0	0	0
Ped-Bike Adj(A_pbT)	1.00		0.98	1.00		1.00	1.00		0.98	1.00		1.00
Parking Bus, Adj	1.00	1.00	1.00	1.00	1.00	1.00	1.00	1.00	1.00	1.00	1.00	1.00
Work Zone On Approach		No			No			No			No	
Adj Sat Flow, veh/h/ln	1856	1856	1856	1559	1559	1559	1663	1663	1663	1678	1678	1678
Adj Flow Rate, veh/h	95	11	16	5	0	11	16	617	11	16	583	89
Peak Hour Factor	0.95	0.95	0.95	0.95	0.95	0.95	0.95	0.95	0.95	0.95	0.95	0.95
Percent Heavy Veh, %	3	3	3	23	23	23	16	16	16	15	15	15
Cap, veh/h	219	17	21	291	0	261	280	802	14	259	826	700
Arrive On Green	0.11	0.11	0.11	0.00	0.00	0.20	0.01	0.49	0.49	0.01	0.49	0.49
Sat Flow, veh/h	1102	157	190	1485	0	1321	1584	1628	29	1598	1678	1422
Grp Volume(v), veh/h	122	0	0	5	0	11	16	0	628	16	583	89
Grp Sat Flow(s),veh/h/ln	1449	0	0	1485	0	1321	1584	0	1657	1598	1678	1422
Q Serve(g_s), s	5.2	0.0	0.0	0.2	0.0	0.4	0.3	0.0	20.3	0.3	17.7	2.2
Cycle Q Clear(g_c), s	5.3	0.0	0.0	0.2	0.0	0.4	0.3	0.0	20.3	0.3	17.7	2.2
Prop In Lane	0.78		0.13	1.00		1.00	1.00		0.02	1.00		1.00
Lane Grp Cap(c), veh/h	257	0	0	291	0	261	280	0	816	259	826	700
V/C Ratio(X)	0.47	0.00	0.00	0.02	0.00	0.04	0.06	0.00	0.77	0.06	0.71	0.13
Avail Cap(c_a), veh/h	498	0	0	614	0	891	855	0	1466	717	1357	1150
HCM Platoon Ratio	1.00	1.00	1.00	1.00	1.00	1.00	1.00	1.00	1.00	1.00	1.00	1.00
Upstream Filter(I)	1.00	0.00	0.00	1.00	0.00	1.00	1.00	0.00	1.00	1.00	1.00	1.00
Uniform Delay (d), s/veh	28.3	0.0	0.0	24.0	0.0	21.2	10.6	0.0	13.6	11.3	12.9	9.0
Incr Delay (d2), s/veh	1.9	0.0	0.0	0.0	0.0	0.1	0.1	0.0	3.3	0.1	2.4	0.2
Initial Q Delay(d3),s/veh	0.0	0.0	0.0	0.0	0.0	0.0	0.0	0.0	0.0	0.0	0.0	0.0
%ile BackOfQ(50%),veh/ln	1.9	0.0	0.0	0.1	0.0	0.1	0.1	0.0	7.1	0.1	6.2	0.6
Unsig. Movement Delay, s/veh												
LnGrp Delay(d),s/veh	30.2	0.0	0.0	24.1	0.0	21.3	10.7	0.0	16.9	11.4	15.3	9.2
LnGrp LOS	C	A	A	C	A	C	B	A	B	B	B	A
Approach Vol, veh/h		122			16			644			688	
Approach Delay, s/veh		30.2			22.2			16.7			14.4	
Approach LOS		C			C			B			B	

Timer - Assigned Phs	1	2	3	4	5	6		8
Phs Duration (G+Y+Rc), s	6.3	39.3	5.8	14.1	6.3	39.3		19.8
Change Period (Y+Rc), s	5.5	7.1	5.5	6.9	5.5	7.1		* 6.9
Max Green Setting (Gmax), s	19.5	57.9	14.5	18.1	24.5	52.9		* 44
Max Q Clear Time (g_c+I1), s	2.3	22.3	2.2	7.3	2.3	19.7		2.4
Green Ext Time (p_c), s	0.0	10.0	0.0	0.5	0.0	9.6		0.0

Intersection Summary	
HCM 6th Ctrl Delay	16.8
HCM 6th LOS	B

Notes

* HCM 6th computational engine requires equal clearance times for the phases crossing the barrier.

Intersection	
Int Delay, s/veh	3.9

Movement	EBL	EBT	WBT	WBR	SBL	SBR
Lane Configurations						
Traffic Vol, veh/h	58	115	190	11	22	105
Future Vol, veh/h	58	115	190	11	22	105
Conflicting Peds, #/hr	0	0	0	0	0	0
Sign Control	Free	Free	Free	Free	Stop	Stop
RT Channelized	-	None	-	None	-	None
Storage Length	450	-	-	-	0	-
Veh in Median Storage, #	-	0	0	-	0	-
Grade, %	-	0	0	-	0	-
Peak Hour Factor	82	82	82	82	82	82
Heavy Vehicles, %	8	8	2	2	15	15
Mvmt Flow	71	140	232	13	27	128

Major/Minor	Major1		Major2		Minor2	
Conflicting Flow All	245	0	-	0	521	239
Stage 1	-	-	-	-	239	-
Stage 2	-	-	-	-	282	-
Critical Hdwy	4.18	-	-	-	6.55	6.35
Critical Hdwy Stg 1	-	-	-	-	5.55	-
Critical Hdwy Stg 2	-	-	-	-	5.55	-
Follow-up Hdwy	2.272	-	-	-	3.635	3.435
Pot Cap-1 Maneuver	1287	-	-	-	494	769
Stage 1	-	-	-	-	771	-
Stage 2	-	-	-	-	737	-
Platoon blocked, %		-	-	-		
Mov Cap-1 Maneuver	1287	-	-	-	467	769
Mov Cap-2 Maneuver	-	-	-	-	467	-
Stage 1	-	-	-	-	729	-
Stage 2	-	-	-	-	737	-

Approach	EB	WB	SB
HCM Control Delay, s	2.7	0	11.7
HCM LOS			B

Minor Lane/Major Mvmt	EBL	EBT	WBT	WBR	SBLn1
Capacity (veh/h)	1287	-	-	-	692
HCM Lane V/C Ratio	0.055	-	-	-	0.224
HCM Control Delay (s)	8	-	-	-	11.7
HCM Lane LOS	A	-	-	-	B
HCM 95th %tile Q(veh)	0.2	-	-	-	0.9

Intersection	
Int Delay, s/veh	2.4

Movement	EBL	EBT	EBR	WBL	WBT	WBR	NBL	NBT	NBR	SBL	SBT	SBR
Lane Configurations												
Traffic Vol, veh/h	5	158	70	80	220	5	20	0	10	5	5	10
Future Vol, veh/h	5	158	70	80	220	5	20	0	10	5	5	10
Conflicting Peds, #/hr	0	0	0	0	0	0	0	0	0	0	0	0
Sign Control	Free	Free	Free	Free	Free	Free	Stop	Stop	Stop	Stop	Stop	Stop
RT Channelized	-	-	None	-	-	None	-	-	None	-	-	None
Storage Length	-	-	-	-	-	-	-	-	-	-	-	-
Veh in Median Storage, #	-	0	-	-	0	-	-	0	-	-	0	-
Grade, %	-	0	-	-	0	-	-	0	-	-	0	-
Peak Hour Factor	89	89	89	89	89	89	89	89	89	89	89	89
Heavy Vehicles, %	9	9	9	7	7	7	0	0	0	53	53	53
Mvmt Flow	6	178	79	90	247	6	22	0	11	6	6	11

Major/Minor	Major1			Major2			Minor1			Minor2		
Conflicting Flow All	253	0	0	257	0	0	669	663	129	531	699	250
Stage 1	-	-	-	-	-	-	230	230	-	430	430	-
Stage 2	-	-	-	-	-	-	439	433	-	101	269	-
Critical Hdwy	4.235	-	-	4.205	-	-	7.3	6.5	6.9	8.095	7.295	6.995
Critical Hdwy Stg 1	-	-	-	-	-	-	6.5	5.5	-	6.895	6.295	-
Critical Hdwy Stg 2	-	-	-	-	-	-	6.1	5.5	-	7.295	6.295	-
Follow-up Hdwy	2.2855	-	-	2.2665	-	-	3.5	4	3.3	4.0035	4.5035	3.8035
Pot Cap-1 Maneuver	1266	-	-	1274	-	-	360	384	903	361	291	663
Stage 1	-	-	-	-	-	-	758	718	-	496	487	-
Stage 2	-	-	-	-	-	-	601	585	-	775	588	-
Platoon blocked, %		-	-		-	-						
Mov Cap-1 Maneuver	1266	-	-	1274	-	-	325	350	903	332	265	663
Mov Cap-2 Maneuver	-	-	-	-	-	-	325	350	-	332	265	-
Stage 1	-	-	-	-	-	-	753	714	-	493	447	-
Stage 2	-	-	-	-	-	-	536	537	-	761	584	-

Approach	EB	WB	NB	SB
HCM Control Delay, s	0.2	2.1	14.5	14.3
HCM LOS			B	B

Minor Lane/Major Mvmt	NBLn1	EBL	EBT	EBR	WBL	WBT	WBR	SBLn1
Capacity (veh/h)	413	1266	-	-	1274	-	-	408
HCM Lane V/C Ratio	0.082	0.004	-	-	0.071	-	-	0.055
HCM Control Delay (s)	14.5	7.9	0	-	8	0	-	14.3
HCM Lane LOS	B	A	A	-	A	A	-	B
HCM 95th %tile Q(veh)	0.3	0	-	-	0.2	-	-	0.2

Movement	WBL	WBR	NBT	NBR	SBL	SBT
Lane Configurations						
Traffic Volume (veh/h)	114	131	425	72	175	1185
Future Volume (veh/h)	114	131	425	72	175	1185
Initial Q (Qb), veh	0	0	0	0	0	0
Ped-Bike Adj(A_pbT)	1.00	1.00		1.00	1.00	
Parking Bus, Adj	1.00	1.00	1.00	1.00	1.00	1.00
Work Zone On Approach	No		No			No
Adj Sat Flow, veh/h/ln	1781	1781	1826	1826	1885	1885
Adj Flow Rate, veh/h	123	141	457	77	188	1274
Peak Hour Factor	0.93	0.93	0.93	0.93	0.93	0.93
Percent Heavy Veh, %	8	8	5	5	1	1
Cap, veh/h	131	150	952	160	552	1350
Arrive On Green	0.18	0.18	0.62	0.62	0.05	0.72
Sat Flow, veh/h	739	847	1523	257	1795	1885
Grp Volume(v), veh/h	265	0	0	534	188	1274
Grp Sat Flow(s),veh/h/ln	1592	0	0	1780	1795	1885
Q Serve(g_s), s	22.2	0.0	0.0	21.8	4.9	80.0
Cycle Q Clear(g_c), s	22.2	0.0	0.0	21.8	4.9	80.0
Prop In Lane	0.46	0.53		0.14	1.00	
Lane Grp Cap(c), veh/h	282	0	0	1112	552	1350
V/C Ratio(X)	0.94	0.00	0.00	0.48	0.34	0.94
Avail Cap(c_a), veh/h	282	0	0	1186	552	1415
HCM Platoon Ratio	1.00	1.00	1.00	1.00	1.00	1.00
Upstream Filter(I)	1.00	0.00	0.00	1.00	1.00	1.00
Uniform Delay (d), s/veh	55.0	0.0	0.0	13.6	9.9	16.8
Incr Delay (d2), s/veh	37.5	0.0	0.0	0.5	0.5	12.8
Initial Q Delay(d3),s/veh	0.0	0.0	0.0	0.0	0.0	0.0
%ile BackOfQ(50%),veh/ln	11.9	0.0	0.0	8.7	1.9	35.3
Unsig. Movement Delay, s/veh						
LnGrp Delay(d),s/veh	92.5	0.0	0.0	14.1	10.4	29.6
LnGrp LOS	F	A	A	B	B	C
Approach Vol, veh/h	265		534			1462
Approach Delay, s/veh	92.5		14.1			27.1
Approach LOS	F		B			C

Timer - Assigned Phs	1	2				6	8
Phs Duration (G+Y+Rc), s	12.4	92.7				105.1	30.3
Change Period (Y+Rc), s	5.5	* 8.1				* 8.1	6.3
Max Green Setting (Gmax), s	6.9	* 90				* 1E2	24.0
Max Q Clear Time (g_c+I1), s	6.9	23.8				82.0	24.2
Green Ext Time (p_c), s	0.0	6.3				14.9	0.0

Intersection Summary	
HCM 6th Ctrl Delay	31.7
HCM 6th LOS	C

Notes

User approved pedestrian interval to be less than phase max green.

User approved volume balancing among the lanes for turning movement.

* HCM 6th computational engine requires equal clearance times for the phases crossing the barrier.

Movement	EBL	EBR	NBL	NBT	SBT	SBR
Lane Configurations						
Traffic Volume (vph)	55	280	80	331	1285	90
Future Volume (vph)	55	280	80	331	1285	90
Ideal Flow (vphpl)	1900	1900	1900	1900	1900	1900
Total Lost time (s)	5.0	5.0	6.5	6.5	6.5	6.5
Lane Util. Factor	1.00	1.00	1.00	1.00	1.00	1.00
Frt	1.00	0.85	1.00	1.00	1.00	0.85
Flt Protected	0.95	1.00	0.95	1.00	1.00	1.00
Satd. Flow (prot)	1752	1568	1787	1881	1881	1599
Flt Permitted	0.95	1.00	0.02	1.00	1.00	1.00
Satd. Flow (perm)	1752	1568	42	1881	1881	1599
Peak-hour factor, PHF	0.94	0.94	0.94	0.94	0.94	0.94
Adj. Flow (vph)	59	298	85	352	1367	96
RTOR Reduction (vph)	0	91	0	0	0	6
Lane Group Flow (vph)	59	207	85	352	1367	90
Heavy Vehicles (%)	3%	3%	1%	1%	1%	1%
Turn Type	custom	custom	pm+pt	NA	NA	Perm
Protected Phases	3	3	5	2	6	
Permitted Phases	4	4	2			6
Actuated Green, G (s)	35.7	35.7	192.8	192.8	173.8	173.8
Effective Green, g (s)	35.7	35.7	192.8	192.8	173.8	173.8
Actuated g/C Ratio	0.15	0.15	0.80	0.80	0.72	0.72
Clearance Time (s)	5.0	5.0	6.5	6.5	6.5	6.5
Vehicle Extension (s)	2.0	2.0	2.0	5.0	5.0	5.0
Lane Grp Cap (vph)	260	233	124	1511	1362	1157
v/s Ratio Prot	0.03	c0.13	c0.04	0.19	c0.73	
v/s Ratio Perm			0.52			0.06
v/c Ratio	0.23	0.89	0.69	0.23	1.00	0.08
Uniform Delay, d1	90.0	100.2	91.7	5.7	33.1	9.7
Progression Factor	1.00	1.00	0.97	1.65	1.00	1.00
Incremental Delay, d2	0.2	30.1	11.5	0.4	25.3	0.1
Delay (s)	90.2	130.3	100.1	9.8	58.4	9.8
Level of Service	F	F	F	A	E	A
Approach Delay (s)	123.6			27.3	55.2	
Approach LOS	F			C	E	

Intersection Summary			
HCM 2000 Control Delay	60.6	HCM 2000 Level of Service	E
HCM 2000 Volume to Capacity ratio	0.98		
Actuated Cycle Length (s)	240.0	Sum of lost time (s)	21.0
Intersection Capacity Utilization	94.6%	ICU Level of Service	F
Analysis Period (min)	15		
c Critical Lane Group			

Movement	EBL	EBR	NBL	NBT	SBT	SBR
Lane Configurations						
Traffic Volume (vph)	121	26	16	270	1225	245
Future Volume (vph)	121	26	16	270	1225	245
Ideal Flow (vphpl)	1900	1900	1900	1900	1900	1900
Total Lost time (s)	5.0	5.0	6.0	6.0	6.0	5.0
Lane Util. Factor	1.00	1.00	1.00	1.00	1.00	1.00
Frt	1.00	0.85	1.00	1.00	1.00	0.85
Flt Protected	0.95	1.00	0.95	1.00	1.00	1.00
Satd. Flow (prot)	1787	1599	1787	1881	1881	1599
Flt Permitted	0.95	1.00	0.04	1.00	1.00	1.00
Satd. Flow (perm)	1787	1599	80	1881	1881	1599
Peak-hour factor, PHF	0.91	0.91	0.91	0.91	0.91	0.91
Adj. Flow (vph)	133	29	18	297	1346	269
RTOR Reduction (vph)	0	26	0	0	0	24
Lane Group Flow (vph)	133	3	18	297	1346	245
Heavy Vehicles (%)	1%	1%	1%	1%	1%	1%
Turn Type	custom	custom	pm+pt	NA	NA	pm+ov
Protected Phases	3	3	5	2	6	3
Permitted Phases	4	4	2			6
Actuated Green, G (s)	13.3	13.3	95.7	95.7	87.6	100.9
Effective Green, g (s)	13.3	13.3	95.7	95.7	87.6	100.9
Actuated g/C Ratio	0.11	0.11	0.80	0.80	0.73	0.84
Clearance Time (s)	5.0	5.0	6.0	6.0	6.0	5.0
Vehicle Extension (s)	2.0	2.0	2.0	2.0	2.0	2.0
Lane Grp Cap (vph)	198	177	93	1500	1373	1344
v/s Ratio Prot	c0.07	0.00	0.00	c0.16	c0.72	0.02
v/s Ratio Perm			0.15			0.13
v/c Ratio	0.67	0.02	0.19	0.20	0.98	0.18
Uniform Delay, d1	51.3	47.5	36.3	2.9	15.4	1.8
Progression Factor	1.00	1.00	1.00	1.00	1.44	1.09
Incremental Delay, d2	6.9	0.0	0.4	0.3	9.5	0.0
Delay (s)	58.1	47.5	36.6	3.2	31.6	2.0
Level of Service	E	D	D	A	C	A
Approach Delay (s)	56.2			5.1	26.6	
Approach LOS	E			A	C	

Intersection Summary			
HCM 2000 Control Delay	25.7	HCM 2000 Level of Service	C
HCM 2000 Volume to Capacity ratio	0.96		
Actuated Cycle Length (s)	120.0	Sum of lost time (s)	20.0
Intersection Capacity Utilization	80.3%	ICU Level of Service	D
Analysis Period (min)	15		
c Critical Lane Group			

Intersection	
Int Delay, s/veh	9

Movement	EBL	EBT	EBR	WBL	WBT	WBR	NBL	NBT	NBR	SBL	SBT	SBR
Lane Configurations												
Traffic Vol, veh/h	0	0	0	180	0	15	20	256	0	0	500	681
Future Vol, veh/h	0	0	0	180	0	15	20	256	0	0	500	681
Conflicting Peds, #/hr	0	0	0	0	0	0	0	0	0	0	0	0
Sign Control	Stop	Stop	Stop	Stop	Stop	Stop	Free	Free	Free	Free	Free	Free
RT Channelized	-	-	None	-	-	None	-	-	None	-	-	None
Storage Length	-	-	-	-	-	500	175	-	-	-	-	375
Veh in Median Storage, #	-	1	-	-	0	-	-	0	-	-	0	-
Grade, %	-	0	-	-	0	-	-	0	-	-	0	-
Peak Hour Factor	98	98	98	98	98	98	98	98	98	98	98	98
Heavy Vehicles, %	0	0	0	1	1	1	1	1	1	1	1	1
Mvmt Flow	0	0	0	184	0	15	20	261	0	0	510	695

Major/Minor	Minor1			Major1			Major2		
Conflicting Flow All	1159	1506	261	1205	0	-	-	-	0
Stage 1	301	301	-	-	-	-	-	-	-
Stage 2	858	1205	-	-	-	-	-	-	-
Critical Hdwy	6.41	6.51	6.21	4.11	-	-	-	-	-
Critical Hdwy Stg 1	5.41	5.51	-	-	-	-	-	-	-
Critical Hdwy Stg 2	5.41	5.51	-	-	-	-	-	-	-
Follow-up Hdwy	3.509	4.009	3.309	2.209	-	-	-	-	-
Pot Cap-1 Maneuver	217	122	780	583	-	0	0	-	-
Stage 1	753	667	-	-	-	0	0	-	-
Stage 2	417	258	-	-	-	0	0	-	-
Platoon blocked, %					-			-	-
Mov Cap-1 Maneuver	210	0	780	583	-	-	-	-	-
Mov Cap-2 Maneuver	210	0	-	-	-	-	-	-	-
Stage 1	727	0	-	-	-	-	-	-	-
Stage 2	417	0	-	-	-	-	-	-	-

Approach	WB	NB	SB
HCM Control Delay, s	75.3	0.8	0
HCM LOS	F		

Minor Lane/Major Mvmt	NBL	NBT	WBLn1	WBLn2	SBT	SBR
Capacity (veh/h)	583	-	210	780	-	-
HCM Lane V/C Ratio	0.035	-	0.875	0.02	-	-
HCM Control Delay (s)	11.4	-	80.8	9.7	-	-
HCM Lane LOS	B	-	F	A	-	-
HCM 95th %tile Q(veh)	0.1	-	6.8	0.1	-	-

Movement	EBL	EBR	NBL	NBT	SBT	SBR
Lane Configurations						
Traffic Volume (veh/h)	156	20	30	120	685	15
Future Volume (veh/h)	156	20	30	120	685	15
Initial Q (Qb), veh	0	0	0	0	0	0
Ped-Bike Adj(A_pbT)	1.00	1.00	1.00			1.00
Parking Bus, Adj	1.00	1.00	1.00	1.00	1.00	1.00
Work Zone On Approach	No			No	No	
Adj Sat Flow, veh/h/ln	1885	1885	1885	1885	1900	1900
Adj Flow Rate, veh/h	162	21	31	125	714	16
Peak Hour Factor	0.96	0.96	0.96	0.96	0.96	0.96
Percent Heavy Veh, %	1	1	1	1	0	0
Cap, veh/h	255	227	184	672	1058	24
Arrive On Green	0.14	0.14	0.57	0.57	0.57	0.57
Sat Flow, veh/h	1795	1598	151	1176	1851	41
Grp Volume(v), veh/h	162	21	156	0	0	730
Grp Sat Flow(s),veh/h/ln	1795	1598	1327	0	0	1893
Q Serve(g_s), s	3.7	0.5	0.5	0.0	0.0	11.8
Cycle Q Clear(g_c), s	3.7	0.5	12.4	0.0	0.0	11.8
Prop In Lane	1.00	1.00	0.20			0.02
Lane Grp Cap(c), veh/h	255	227	856	0	0	1082
V/C Ratio(X)	0.64	0.09	0.18	0.00	0.00	0.67
Avail Cap(c_a), veh/h	1375	1224	856	0	0	1879
HCM Platoon Ratio	1.00	1.00	1.00	1.00	1.00	1.00
Upstream Filter(I)	1.00	1.00	1.00	0.00	0.00	1.00
Uniform Delay (d), s/veh	17.8	16.4	4.6	0.0	0.0	6.6
Incr Delay (d2), s/veh	2.6	0.2	0.2	0.0	0.0	1.6
Initial Q Delay(d3),s/veh	0.0	0.0	0.0	0.0	0.0	0.0
%ile BackOfQ(50%),veh/ln	1.5	0.2	0.5	0.0	0.0	3.3
Unsig. Movement Delay, s/veh						
LnGrp Delay(d),s/veh	20.4	16.6	4.9	0.0	0.0	8.2
LnGrp LOS	C	B	A	A	A	A
Approach Vol, veh/h	183			156	730	
Approach Delay, s/veh	20.0			4.9	8.2	
Approach LOS	B			A	A	

Timer - Assigned Phs		2		4		6
Phs Duration (G+Y+Rc), s		31.5		12.6		31.5
Change Period (Y+Rc), s		6.3		6.3		6.3
Max Green Setting (Gmax), s		23.7		33.7		43.7
Max Q Clear Time (g_c+I1), s		14.4		5.7		13.8
Green Ext Time (p_c), s		1.0		0.5		11.3

Intersection Summary	
HCM 6th Ctrl Delay	9.7
HCM 6th LOS	A

Movement	EBL	EBT	EBR	WBL	WBT	WBR	NBL	NBT	NBR	SBL	SBT	SBR
Lane Configurations												
Traffic Volume (veh/h)	85	5	20	10	5	5	35	536	5	5	1295	295
Future Volume (veh/h)	85	5	20	10	5	5	35	536	5	5	1295	295
Initial Q (Qb), veh	0	0	0	0	0	0	0	0	0	0	0	0
Ped-Bike Adj(A_pbT)	1.00		1.00	1.00		1.00	1.00		1.00	1.00		1.00
Parking Bus, Adj	1.00	1.00	1.00	1.00	1.00	1.00	1.00	1.00	1.00	1.00	1.00	1.00
Work Zone On Approach		No			No			No			No	
Adj Sat Flow, veh/h/ln	1885	1885	1885	1900	1900	1900	1826	1826	1826	1856	1856	1856
Adj Flow Rate, veh/h	90	5	21	11	5	5	37	570	5	5	1378	314
Peak Hour Factor	0.94	0.94	0.94	0.94	0.94	0.94	0.94	0.94	0.94	0.94	0.94	0.94
Percent Heavy Veh, %	1	1	1	0	0	0	5	5	5	3	3	3
Cap, veh/h	144	6	23	213	116	116	78	1315	12	557	1327	1125
Arrive On Green	0.09	0.09	0.09	0.01	0.13	0.13	0.02	0.73	0.73	0.00	0.72	0.72
Sat Flow, veh/h	1134	63	265	1810	872	872	1739	1807	16	1767	1856	1572
Grp Volume(v), veh/h	116	0	0	11	0	10	37	0	575	5	1378	314
Grp Sat Flow(s),veh/h/ln	1462	0	0	1810	0	1743	1739	0	1823	1767	1856	1572
Q Serve(g_s), s	11.3	0.0	0.0	0.8	0.0	0.7	0.8	0.0	18.1	0.1	102.9	10.2
Cycle Q Clear(g_c), s	11.3	0.0	0.0	0.8	0.0	0.7	0.8	0.0	18.1	0.1	102.9	10.2
Prop In Lane	0.78		0.18	1.00		0.50	1.00		0.01	1.00		1.00
Lane Grp Cap(c), veh/h	172	0	0	213	0	232	78	0	1326	557	1327	1125
V/C Ratio(X)	0.67	0.00	0.00	0.05	0.00	0.04	0.47	0.00	0.43	0.01	1.04	0.28
Avail Cap(c_a), veh/h	172	0	0	269	0	298	98	0	1326	600	1327	1125
HCM Platoon Ratio	1.00	1.00	1.00	1.00	1.00	1.00	1.00	1.00	1.00	1.00	1.00	1.00
Upstream Filter(I)	1.00	0.00	0.00	1.00	0.00	1.00	1.00	0.00	1.00	1.00	1.00	1.00
Uniform Delay (d), s/veh	65.1	0.0	0.0	57.5	0.0	54.4	42.1	0.0	7.8	6.6	20.5	7.3
Incr Delay (d2), s/veh	10.9	0.0	0.0	0.1	0.0	0.1	4.4	0.0	0.5	0.0	35.3	0.3
Initial Q Delay(d3),s/veh	0.0	0.0	0.0	0.0	0.0	0.0	0.0	0.0	0.0	0.0	0.0	0.0
%ile BackOfQ(50%),veh/ln	4.8	0.0	0.0	0.4	0.0	0.3	1.0	0.0	6.9	0.0	52.6	3.4
Unsig. Movement Delay, s/veh												
LnGrp Delay(d),s/veh	76.0	0.0	0.0	57.6	0.0	54.5	46.5	0.0	8.3	6.6	55.8	7.6
LnGrp LOS	E	A	A	E	A	D	D	A	A	A	F	A
Approach Vol, veh/h		116			21			612			1697	
Approach Delay, s/veh		76.0			56.1			10.6			46.7	
Approach LOS		E			E			B			D	

Timer - Assigned Phs	1	2	3	4	5	6		8
Phs Duration (G+Y+Rc), s	6.0	111.8	6.6	19.5	7.8	110.0		26.1
Change Period (Y+Rc), s	5.5	7.1	5.5	6.9	5.5	7.1		* 6.9
Max Green Setting (Gmax), s	4.0	102.9	5.5	12.6	4.0	102.9		* 25
Max Q Clear Time (g_c+I1), s	2.1	20.1	2.8	13.3	2.8	104.9		2.7
Green Ext Time (p_c), s	0.0	9.9	0.0	0.0	0.0	0.0		0.0

Intersection Summary	
HCM 6th Ctrl Delay	39.1
HCM 6th LOS	D

Notes

* HCM 6th computational engine requires equal clearance times for the phases crossing the barrier.

Intersection	
Int Delay, s/veh	0.9

Movement	EBL	EBT	WBT	WBR	SBL	SBR
Lane Configurations						
Traffic Vol, veh/h	20	385	65	10	10	18
Future Vol, veh/h	20	385	65	10	10	18
Conflicting Peds, #/hr	0	0	0	0	0	0
Sign Control	Free	Free	Free	Free	Stop	Stop
RT Channelized	-	None	-	None	-	None
Storage Length	450	-	-	-	0	-
Veh in Median Storage, #	-	0	0	-	0	-
Grade, %	-	0	0	-	0	-
Peak Hour Factor	89	89	89	89	89	89
Heavy Vehicles, %	2	2	2	2	49	49
Mvmt Flow	22	433	73	11	11	20

Major/Minor	Major1		Major2		Minor2	
Conflicting Flow All	84	0	-	0	556	79
Stage 1	-	-	-	-	79	-
Stage 2	-	-	-	-	477	-
Critical Hdwy	4.12	-	-	-	6.89	6.69
Critical Hdwy Stg 1	-	-	-	-	5.89	-
Critical Hdwy Stg 2	-	-	-	-	5.89	-
Follow-up Hdwy	2.218	-	-	-	3.941	3.741
Pot Cap-1 Maneuver	1513	-	-	-	421	865
Stage 1	-	-	-	-	838	-
Stage 2	-	-	-	-	537	-
Platoon blocked, %		-	-	-		
Mov Cap-1 Maneuver	1513	-	-	-	415	865
Mov Cap-2 Maneuver	-	-	-	-	415	-
Stage 1	-	-	-	-	825	-
Stage 2	-	-	-	-	537	-

Approach	EB	WB	SB
HCM Control Delay, s	0.4	0	11.1
HCM LOS			B

Minor Lane/Major Mvmt	EBL	EBT	WBT	WBR	SBLn1
Capacity (veh/h)	1513	-	-	-	624
HCM Lane V/C Ratio	0.015	-	-	-	0.05
HCM Control Delay (s)	7.4	-	-	-	11.1
HCM Lane LOS	A	-	-	-	B
HCM 95th %tile Q(veh)	0	-	-	-	0.2

Intersection	
Int Delay, s/veh	6.6

Movement	EBL	EBT	EBR	WBL	WBT	WBR	NBL	NBT	NBR	SBL	SBT	SBR
Lane Configurations												
Traffic Vol, veh/h	0	200	15	5	83	0	100	5	190	5	0	0
Future Vol, veh/h	0	200	15	5	83	0	100	5	190	5	0	0
Conflicting Peds, #/hr	0	0	0	0	0	0	0	0	0	0	0	0
Sign Control	Free	Free	Free	Free	Free	Free	Stop	Stop	Stop	Stop	Stop	Stop
RT Channelized	-	-	None	-	-	None	-	-	None	-	-	None
Storage Length	-	-	-	-	-	-	-	-	-	-	-	-
Veh in Median Storage, #	-	0	-	-	0	-	-	0	-	-	0	-
Grade, %	-	0	-	-	0	-	-	0	-	-	0	-
Peak Hour Factor	89	89	89	89	89	89	89	89	89	89	89	89
Heavy Vehicles, %	4	4	4	30	30	30	1	1	1	0	0	0
Mvmt Flow	0	225	17	6	93	0	112	6	213	6	0	0

Major/Minor	Major1			Major2			Minor1			Minor2		
Conflicting Flow All	93	0	0	242	0	0	339	339	121	221	347	93
Stage 1	-	-	-	-	-	-	234	234	-	105	105	-
Stage 2	-	-	-	-	-	-	105	105	-	116	242	-
Critical Hdwy	4.16	-	-	4.55	-	-	7.315	6.515	6.915	7.3	6.5	6.2
Critical Hdwy Stg 1	-	-	-	-	-	-	6.515	5.515	-	6.1	5.5	-
Critical Hdwy Stg 2	-	-	-	-	-	-	6.115	5.515	-	6.5	5.5	-
Follow-up Hdwy	2.238	-	-	2.485	-	-	3.5095	4.0095	3.3095	3.5	4	3.3
Pot Cap-1 Maneuver	1487	-	-	1159	-	-	605	584	911	730	580	970
Stage 1	-	-	-	-	-	-	751	713	-	906	812	-
Stage 2	-	-	-	-	-	-	903	810	-	882	709	-
Platoon blocked, %		-	-		-	-						
Mov Cap-1 Maneuver	1487	-	-	1159	-	-	603	581	911	553	577	970
Mov Cap-2 Maneuver	-	-	-	-	-	-	603	581	-	553	577	-
Stage 1	-	-	-	-	-	-	751	713	-	906	808	-
Stage 2	-	-	-	-	-	-	898	806	-	670	709	-

Approach	EB	WB	NB	SB
HCM Control Delay, s	0	0.5	13.2	11.6
HCM LOS			B	B

Minor Lane/Major Mvmt	NBLn1	EBL	EBT	EBR	WBL	WBT	WBR	SBLn1
Capacity (veh/h)	770	1487	-	-	1159	-	-	553
HCM Lane V/C Ratio	0.43	-	-	-	0.005	-	-	0.01
HCM Control Delay (s)	13.2	0	-	-	8.1	0	-	11.6
HCM Lane LOS	B	A	-	-	A	A	-	B
HCM 95th %tile Q(veh)	2.2	0	-	-	0	-	-	0

Movement	WBL	WBR	NBT	NBR	SBL	SBT
Lane Configurations						
Traffic Volume (veh/h)	24	149	970	180	50	325
Future Volume (veh/h)	24	149	970	180	50	325
Initial Q (Qb), veh	0	0	0	0	0	0
Ped-Bike Adj(A_pbT)	1.00	1.00		1.00	1.00	
Parking Bus, Adj	1.00	1.00	1.00	1.00	1.00	1.00
Work Zone On Approach	No		No			No
Adj Sat Flow, veh/h/ln	1618	1618	1856	1856	1826	1826
Adj Flow Rate, veh/h	26	160	1043	194	54	349
Peak Hour Factor	0.93	0.93	0.93	0.93	0.93	0.93
Percent Heavy Veh, %	19	19	3	3	5	5
Cap, veh/h	28	175	1047	195	105	1380
Arrive On Green	0.15	0.15	0.69	0.69	0.03	0.76
Sat Flow, veh/h	194	1193	1522	283	1739	1826
Grp Volume(v), veh/h	187	0	0	1237	54	349
Grp Sat Flow(s),veh/h/ln	1394	0	0	1805	1739	1826
Q Serve(g_s), s	19.5	0.0	0.0	100.2	1.3	8.5
Cycle Q Clear(g_c), s	19.5	0.0	0.0	100.2	1.3	8.5
Prop In Lane	0.14	0.86		0.16	1.00	
Lane Grp Cap(c), veh/h	205	0	0	1242	105	1380
V/C Ratio(X)	0.91	0.00	0.00	1.00	0.51	0.25
Avail Cap(c_a), veh/h	230	0	0	1242	115	1380
HCM Platoon Ratio	1.00	1.00	1.00	1.00	1.00	1.00
Upstream Filter(I)	1.00	0.00	0.00	1.00	1.00	1.00
Uniform Delay (d), s/veh	62.0	0.0	0.0	22.8	41.7	5.4
Incr Delay (d2), s/veh	34.9	0.0	0.0	24.6	5.4	0.1
Initial Q Delay(d3),s/veh	0.0	0.0	0.0	0.0	0.0	0.0
%ile BackOfQ(50%),veh/ln	8.9	0.0	0.0	47.3	1.6	3.1
Unsig. Movement Delay, s/veh						
LnGrp Delay(d),s/veh	96.9	0.0	0.0	47.3	47.2	5.6
LnGrp LOS	F	A	A	D	D	A
Approach Vol, veh/h	187		1237			403
Approach Delay, s/veh	96.9		47.3			11.2
Approach LOS	F		D			B

Timer - Assigned Phs	1	2				6	8
Phs Duration (G+Y+Rc), s	10.0	109.6				119.6	27.9
Change Period (Y+Rc), s	5.5	* 8.1				* 8.1	6.3
Max Green Setting (Gmax), s	5.3	* 1E2				* 1.1E2	24.3
Max Q Clear Time (g_c+I1), s	3.3	102.2				10.5	21.5
Green Ext Time (p_c), s	0.0	0.0				3.6	0.2

Intersection Summary	
HCM 6th Ctrl Delay	44.4
HCM 6th LOS	D

Notes

User approved pedestrian interval to be less than phase max green.

User approved volume balancing among the lanes for turning movement.

* HCM 6th computational engine requires equal clearance times for the phases crossing the barrier.

Movement	EBL	EBR	NBL	NBT	SBT	SBR
Lane Configurations						
Traffic Volume (vph)	80	60	80	1305	165	50
Future Volume (vph)	80	60	80	1305	165	50
Ideal Flow (vphpl)	1900	1900	1900	1900	1900	1900
Total Lost time (s)	5.0	5.0	6.5	6.5	6.5	6.5
Lane Util. Factor	1.00	1.00	1.00	1.00	1.00	1.00
Frt	1.00	0.85	1.00	1.00	1.00	0.85
Flt Protected	0.95	1.00	0.95	1.00	1.00	1.00
Satd. Flow (prot)	1641	1468	1752	1845	1743	1482
Flt Permitted	0.95	1.00	0.56	1.00	1.00	1.00
Satd. Flow (perm)	1641	1468	1034	1845	1743	1482
Peak-hour factor, PHF	0.92	0.92	0.92	0.92	0.92	0.92
Adj. Flow (vph)	87	65	87	1418	179	54
RTOR Reduction (vph)	0	59	0	0	0	22
Lane Group Flow (vph)	87	6	87	1418	179	32
Heavy Vehicles (%)	10%	10%	3%	3%	9%	9%
Turn Type	custom	custom	pm+pt	NA	NA	Perm
Protected Phases	3	3	5	2	6	
Permitted Phases	4	4	2			6
Actuated Green, G (s)	6.9	6.9	54.4	54.4	43.4	43.4
Effective Green, g (s)	6.9	6.9	54.4	54.4	43.4	43.4
Actuated g/C Ratio	0.09	0.09	0.75	0.75	0.60	0.60
Clearance Time (s)	5.0	5.0	6.5	6.5	6.5	6.5
Vehicle Extension (s)	2.0	2.0	2.0	5.0	5.0	5.0
Lane Grp Cap (vph)	155	139	817	1378	1039	883
v/s Ratio Prot	c0.05	0.00	0.01	c0.77	0.10	
v/s Ratio Perm			0.07			0.02
v/c Ratio	0.56	0.04	0.11	1.03	0.17	0.04
Uniform Delay, d1	31.5	30.0	2.8	9.2	6.6	6.1
Progression Factor	1.00	1.00	1.00	1.00	1.00	1.00
Incremental Delay, d2	2.8	0.0	0.0	32.0	0.2	0.0
Delay (s)	34.3	30.0	2.8	41.2	6.8	6.1
Level of Service	C	C	A	D	A	A
Approach Delay (s)	32.4			39.0	6.6	
Approach LOS	C			D	A	

Intersection Summary			
HCM 2000 Control Delay	34.4	HCM 2000 Level of Service	C
HCM 2000 Volume to Capacity ratio	1.15		
Actuated Cycle Length (s)	72.8	Sum of lost time (s)	21.0
Intersection Capacity Utilization	82.7%	ICU Level of Service	E
Analysis Period (min)	15		
c Critical Lane Group			

Movement	EBL	EBR	NBL	NBT	SBT	SBR
Lane Configurations						
Traffic Volume (vph)	340	55	20	1045	170	55
Future Volume (vph)	340	55	20	1045	170	55
Ideal Flow (vphpl)	1900	1900	1900	1900	1900	1900
Total Lost time (s)	5.0	5.0	6.0	6.0	6.0	5.0
Lane Util. Factor	1.00	1.00	1.00	1.00	1.00	1.00
Frt	1.00	0.85	1.00	1.00	1.00	0.85
Flt Protected	0.95	1.00	0.95	1.00	1.00	1.00
Satd. Flow (prot)	1770	1583	1752	1845	1810	1538
Flt Permitted	0.95	1.00	0.60	1.00	1.00	1.00
Satd. Flow (perm)	1770	1583	1108	1845	1810	1538
Peak-hour factor, PHF	0.91	0.91	0.91	0.91	0.91	0.91
Adj. Flow (vph)	374	60	22	1148	187	60
RTOR Reduction (vph)	0	45	0	0	0	7
Lane Group Flow (vph)	374	15	22	1148	187	53
Heavy Vehicles (%)	2%	2%	3%	3%	5%	5%
Turn Type	custom	custom	pm+pt	NA	NA	pm+ov
Protected Phases	3	3	5	2	6	3
Permitted Phases	4	4	2			6
Actuated Green, G (s)	43.6	43.6	125.4	125.4	116.0	159.6
Effective Green, g (s)	43.6	43.6	125.4	125.4	116.0	159.6
Actuated g/C Ratio	0.24	0.24	0.70	0.70	0.64	0.89
Clearance Time (s)	5.0	5.0	6.0	6.0	6.0	5.0
Vehicle Extension (s)	2.0	2.0	2.0	2.0	2.0	2.0
Lane Grp Cap (vph)	428	383	784	1285	1166	1363
v/s Ratio Prot	c0.21	0.01	0.00	c0.62	0.10	0.01
v/s Ratio Perm			0.02			0.03
v/c Ratio	0.87	0.04	0.03	0.89	0.16	0.04
Uniform Delay, d1	65.6	52.2	8.5	21.9	12.7	1.2
Progression Factor	1.00	1.00	1.00	1.00	1.00	1.00
Incremental Delay, d2	17.1	0.0	0.0	9.8	0.3	0.0
Delay (s)	82.7	52.2	8.5	31.7	13.0	1.2
Level of Service	F	D	A	C	B	A
Approach Delay (s)	78.5			31.2	10.1	
Approach LOS	E			C	B	

Intersection Summary			
HCM 2000 Control Delay	39.5	HCM 2000 Level of Service	D
HCM 2000 Volume to Capacity ratio	0.94		
Actuated Cycle Length (s)	180.0	Sum of lost time (s)	20.0
Intersection Capacity Utilization	83.0%	ICU Level of Service	E
Analysis Period (min)	15		
c Critical Lane Group			

Intersection	
Int Delay, s/veh	0.8

Movement	EBL	EBT	EBR	WBL	WBT	WBR	NBL	NBT	NBR	SBL	SBT	SBR
Lane Configurations												
Traffic Vol, veh/h	0	0	0	15	0	15	10	975	0	0	60	95
Future Vol, veh/h	0	0	0	15	0	15	10	975	0	0	60	95
Conflicting Peds, #/hr	0	0	0	0	0	0	0	0	0	0	0	0
Sign Control	Stop	Stop	Stop	Stop	Stop	Stop	Free	Free	Free	Free	Free	Free
RT Channelized	-	-	None	-	-	None	-	-	None	-	-	None
Storage Length	-	-	-	-	-	500	175	-	-	-	-	375
Veh in Median Storage, #	-	1	-	-	0	-	-	0	-	-	0	-
Grade, %	-	0	-	-	0	-	-	0	-	-	0	-
Peak Hour Factor	83	83	83	83	83	83	83	83	83	83	83	83
Heavy Vehicles, %	0	0	0	19	19	19	3	3	3	4	4	4
Mvmt Flow	0	0	0	18	0	18	12	1175	0	0	72	114

Major/Minor	Minor1		Major1			Major2			
Conflicting Flow All	1328	1385	1175	186	0	-	-	-	0
Stage 1	1199	1199	-	-	-	-	-	-	-
Stage 2	129	186	-	-	-	-	-	-	-
Critical Hdwy	6.59	6.69	6.39	4.13	-	-	-	-	-
Critical Hdwy Stg 1	5.59	5.69	-	-	-	-	-	-	-
Critical Hdwy Stg 2	5.59	5.69	-	-	-	-	-	-	-
Follow-up Hdwy	3.671	4.171	3.471	2.227	-	-	-	-	-
Pot Cap-1 Maneuver	157	132	215	1382	-	0	0	-	-
Stage 1	264	240	-	-	-	0	0	-	-
Stage 2	857	715	-	-	-	0	0	-	-
Platoon blocked, %					-			-	-
Mov Cap-1 Maneuver	156	0	215	1382	-	-	-	-	-
Mov Cap-2 Maneuver	156	0	-	-	-	-	-	-	-
Stage 1	262	0	-	-	-	-	-	-	-
Stage 2	857	0	-	-	-	-	-	-	-

Approach	WB	NB	SB
HCM Control Delay, s	27.2	0.1	0
HCM LOS	D		

Minor Lane/Major Mvmt	NBL	NBT	WBLn1	WBLn2	SBT	SBR
Capacity (veh/h)	1382	-	156	215	-	-
HCM Lane V/C Ratio	0.009	-	0.116	0.084	-	-
HCM Control Delay (s)	7.6	-	31.1	23.3	-	-
HCM Lane LOS	A	-	D	C	-	-
HCM 95th %tile Q(veh)	0	-	0.4	0.3	-	-

Movement	EBL	EBR	NBL	NBT	SBT	SBR
Lane Configurations						
Traffic Volume (veh/h)	625	10	90	360	70	5
Future Volume (veh/h)	625	10	90	360	70	5
Initial Q (Qb), veh	0	0	0	0	0	0
Ped-Bike Adj(A_pbT)	1.00	1.00	1.00			1.00
Parking Bus, Adj	1.00	1.00	1.00	1.00	1.00	1.00
Work Zone On Approach	No			No	No	
Adj Sat Flow, veh/h/ln	1856	1856	1870	1870	1811	1811
Adj Flow Rate, veh/h	762	12	110	439	85	6
Peak Hour Factor	0.82	0.82	0.82	0.82	0.82	0.82
Percent Heavy Veh, %	3	3	2	2	6	6
Cap, veh/h	813	724	166	570	658	46
Arrive On Green	0.46	0.46	0.39	0.39	0.39	0.39
Sat Flow, veh/h	1767	1572	294	1449	1672	118
Grp Volume(v), veh/h	762	12	549	0	0	91
Grp Sat Flow(s),veh/h/ln	1767	1572	1743	0	0	1790
Q Serve(g_s), s	35.2	0.4	18.8	0.0	0.0	2.8
Cycle Q Clear(g_c), s	35.2	0.4	23.8	0.0	0.0	2.8
Prop In Lane	1.00	1.00	0.20			0.07
Lane Grp Cap(c), veh/h	813	724	736	0	0	704
V/C Ratio(X)	0.94	0.02	0.75	0.00	0.00	0.13
Avail Cap(c_a), veh/h	1000	890	1233	0	0	704
HCM Platoon Ratio	1.00	1.00	1.00	1.00	1.00	1.00
Upstream Filter(I)	1.00	1.00	1.00	0.00	0.00	1.00
Uniform Delay (d), s/veh	22.0	12.6	22.9	0.0	0.0	16.7
Incr Delay (d2), s/veh	13.9	0.0	3.2	0.0	0.0	0.2
Initial Q Delay(d3),s/veh	0.0	0.0	0.0	0.0	0.0	0.0
%ile BackOfQ(50%),veh/ln	16.5	0.1	9.9	0.0	0.0	1.1
Unsig. Movement Delay, s/veh						
LnGrp Delay(d),s/veh	35.9	12.6	26.1	0.0	0.0	16.9
LnGrp LOS	D	B	C	A	A	B
Approach Vol, veh/h	774			549	91	
Approach Delay, s/veh	35.5			26.1	16.9	
Approach LOS	D			C	B	

Timer - Assigned Phs		2		4		6
Phs Duration (G+Y+Rc), s		40.2		45.9		40.2
Change Period (Y+Rc), s		6.3		6.3		6.3
Max Green Setting (Gmax), s		58.7		48.7		33.7
Max Q Clear Time (g_c+I1), s		25.8		37.2		4.8
Green Ext Time (p_c), s		8.0		2.4		0.9

Intersection Summary	
HCM 6th Ctrl Delay	30.7
HCM 6th LOS	C

Movement	EBL	EBT	EBR	WBL	WBT	WBR	NBL	NBT	NBR	SBL	SBT	SBR
Lane Configurations												
Traffic Volume (veh/h)	185	10	25	5	0	5	10	1109	0	5	370	70
Future Volume (veh/h)	185	10	25	5	0	5	10	1109	0	5	370	70
Initial Q (Qb), veh	0	0	0	0	0	0	0	0	0	0	0	0
Ped-Bike Adj(A_pbT)	1.00		0.98	1.00		1.00	1.00		1.00	1.00		1.00
Parking Bus, Adj	1.00	1.00	1.00	1.00	1.00	1.00	1.00	1.00	1.00	1.00	1.00	1.00
Work Zone On Approach		No			No			No			No	
Adj Sat Flow, veh/h/ln	1885	1885	1885	1693	1693	1693	1752	1752	1752	1648	1648	1648
Adj Flow Rate, veh/h	201	11	27	5	0	5	11	1205	0	5	402	76
Peak Hour Factor	0.92	0.92	0.92	0.92	0.92	0.92	0.92	0.92	0.92	0.92	0.92	0.92
Percent Heavy Veh, %	1	1	1	14	14	14	10	10	10	17	17	17
Cap, veh/h	210	9	22	268	0	253	555	1191	0	58	1115	945
Arrive On Green	0.13	0.13	0.13	0.00	0.00	0.18	0.01	0.68	0.00	0.00	0.68	0.68
Sat Flow, veh/h	1222	67	164	1612	0	1434	1668	1752	0	1570	1648	1397
Grp Volume(v), veh/h	239	0	0	5	0	5	11	1205	0	5	402	76
Grp Sat Flow(s),veh/h/ln	1453	0	0	1612	0	1434	1668	1752	0	1570	1648	1397
Q Serve(g_s), s	18.6	0.0	0.0	0.4	0.0	0.4	0.3	94.9	0.0	0.1	14.6	2.6
Cycle Q Clear(g_c), s	18.6	0.0	0.0	0.4	0.0	0.4	0.3	94.9	0.0	0.1	14.6	2.6
Prop In Lane	0.84		0.11	1.00		1.00	1.00		0.00	1.00		1.00
Lane Grp Cap(c), veh/h	241	0	0	268	0	253	555	1191	0	58	1115	945
V/C Ratio(X)	0.99	0.00	0.00	0.02	0.00	0.02	0.02	1.01	0.00	0.09	0.36	0.08
Avail Cap(c_a), veh/h	241	0	0	348	0	335	590	1191	0	97	1121	950
HCM Platoon Ratio	1.00	1.00	1.00	1.00	1.00	1.00	1.00	1.00	1.00	1.00	1.00	1.00
Upstream Filter(I)	1.00	0.00	0.00	1.00	0.00	1.00	1.00	1.00	0.00	1.00	1.00	1.00
Uniform Delay (d), s/veh	62.2	0.0	0.0	50.4	0.0	47.5	7.8	22.3	0.0	39.1	9.7	7.7
Incr Delay (d2), s/veh	55.3	0.0	0.0	0.0	0.0	0.0	0.0	29.0	0.0	0.6	0.4	0.1
Initial Q Delay(d3),s/veh	0.0	0.0	0.0	0.0	0.0	0.0	0.0	0.0	0.0	0.0	0.0	0.0
%ile BackOfQ(50%),veh/ln	12.3	0.0	0.0	0.2	0.0	0.1	0.1	45.0	0.0	0.1	5.3	0.8
Unsig. Movement Delay, s/veh												
LnGrp Delay(d),s/veh	117.6	0.0	0.0	50.4	0.0	47.5	7.8	51.3	0.0	39.7	10.1	7.8
LnGrp LOS	F	A	A	D	A	D	A	F	A	D	B	A
Approach Vol, veh/h		239			10			1216			483	
Approach Delay, s/veh		117.6			49.0			50.9			10.0	
Approach LOS		F			D			D			B	

Timer - Assigned Phs	1	2	3	4	5	6		8
Phs Duration (G+Y+Rc), s	6.0	102.0	6.0	25.5	6.5	101.5		31.5
Change Period (Y+Rc), s	5.5	7.1	5.5	6.9	5.5	7.1		* 6.9
Max Green Setting (Gmax), s	4.0	94.9	7.5	18.6	4.0	94.9		* 33
Max Q Clear Time (g_c+I1), s	2.1	96.9	2.4	20.6	2.3	16.6		2.4
Green Ext Time (p_c), s	0.0	0.0	0.0	0.0	0.0	6.8		0.0

Intersection Summary	
HCM 6th Ctrl Delay	48.9
HCM 6th LOS	D

Notes

* HCM 6th computational engine requires equal clearance times for the phases crossing the barrier.

Movement	EBL	EBT	EBR	WBL	WBT	WBR	NBL	NBT	NBR	SBL	SBT	SBR
Lane Configurations												
Traffic Volume (vph)	620	310	85	5	979	545	105	100	10	100	25	280
Future Volume (vph)	620	310	85	5	979	545	105	100	10	100	25	280
Ideal Flow (vphpl)	1900	1900	1900	1900	1900	1900	1900	1900	1900	1900	1900	1900
Total Lost time (s)	6.4	6.4	6.4	6.4	6.4	6.4	5.0	5.0		5.0	5.0	6.4
Lane Util. Factor	1.00	0.95	1.00	1.00	0.95	1.00	1.00	1.00		1.00	1.00	1.00
Frpb, ped/bikes	1.00	1.00	1.00	1.00	1.00	1.00	1.00	1.00		1.00	1.00	1.00
Flpb, ped/bikes	1.00	1.00	1.00	1.00	1.00	1.00	0.99	1.00		1.00	1.00	1.00
Frt	1.00	1.00	0.85	1.00	1.00	0.85	1.00	0.99		1.00	1.00	0.85
Flt Protected	0.95	1.00	1.00	0.95	1.00	1.00	0.95	1.00		0.95	1.00	1.00
Satd. Flow (prot)	1687	3374	1509	1687	3374	1509	1778	1854		1736	1827	1546
Flt Permitted	0.95	1.00	1.00	0.95	1.00	1.00	0.53	1.00		0.68	1.00	1.00
Satd. Flow (perm)	1687	3374	1509	1687	3374	1509	985	1854		1247	1827	1546
Peak-hour factor, PHF	0.95	0.95	0.95	0.95	0.95	0.95	0.95	0.95	0.95	0.95	0.95	0.95
Adj. Flow (vph)	653	326	89	5	1031	574	111	105	11	105	26	295
RTOR Reduction (vph)	0	0	28	0	0	238	0	3	0	0	0	56
Lane Group Flow (vph)	653	326	61	5	1031	336	111	113	0	105	26	239
Confl. Peds. (#/hr)							9					9
Heavy Vehicles (%)	7%	7%	7%	7%	7%	7%	1%	1%	1%	4%	4%	4%
Turn Type	Prot	NA	Perm	Prot	NA	Perm	pm+pt	NA		pm+pt	NA	pm+ov
Protected Phases	5 15	2		1	6		3	8		7	4	5 15
Permitted Phases			2			6	8			4		4
Actuated Green, G (s)	51.8	106.7	106.7	1.3	49.8	49.8	30.4	19.4		18.3	12.3	64.1
Effective Green, g (s)	51.8	106.7	106.7	1.3	49.8	49.8	30.4	19.4		18.3	12.3	64.1
Actuated g/C Ratio	0.33	0.68	0.68	0.01	0.32	0.32	0.19	0.12		0.12	0.08	0.41
Clearance Time (s)		6.4	6.4	6.4	6.4	6.4	5.0	5.0		5.0	5.0	
Vehicle Extension (s)		5.0	5.0	3.0	5.0	5.0	3.0	3.0		3.0	3.0	
Lane Grp Cap (vph)	559	2304	1030	14	1075	481	258	230		164	143	634
v/s Ratio Prot	c0.39	0.10		0.00	c0.31		c0.04	0.06		c0.02	0.01	0.12
v/s Ratio Perm			0.04			0.22	0.05			c0.05		0.03
v/c Ratio	1.17	0.14	0.06	0.36	0.96	0.70	0.43	0.49		0.64	0.18	0.38
Uniform Delay, d1	52.2	8.7	8.2	77.0	52.2	46.6	54.1	63.8		65.0	67.2	32.1
Progression Factor	1.00	1.00	1.00	1.00	1.00	1.00	1.00	1.00		1.00	1.00	1.00
Incremental Delay, d2	93.7	0.1	0.1	14.9	18.6	5.5	1.2	1.7		8.3	0.6	0.4
Delay (s)	145.9	8.7	8.2	92.0	70.8	52.1	55.3	65.5		73.2	67.9	32.5
Level of Service	F	A	A	F	E	D	E	E		E	E	C
Approach Delay (s)		92.6			64.2			60.5			44.7	
Approach LOS		F			E			E			D	

Intersection Summary			
HCM 2000 Control Delay	70.5	HCM 2000 Level of Service	E
HCM 2000 Volume to Capacity ratio	0.96		
Actuated Cycle Length (s)	156.2	Sum of lost time (s)	29.2
Intersection Capacity Utilization	93.3%	ICU Level of Service	F
Analysis Period (min)	15		

c Critical Lane Group

Movement	EBT	EBR	WBL	WBT	NBL	NBR
Lane Configurations						
Traffic Volume (veh/h)	375	225	334	1030	1010	635
Future Volume (veh/h)	375	225	334	1030	1010	635
Initial Q (Qb), veh	0	0	0	0	0	0
Ped-Bike Adj(A_pbT)		1.00	1.00		1.00	1.00
Parking Bus, Adj	1.00	1.00	1.00	1.00	1.00	1.00
Work Zone On Approach	No			No	No	
Adj Sat Flow, veh/h/ln	1678	1678	1781	1781	1885	1885
Adj Flow Rate, veh/h	408	0	363	1120	1098	690
Peak Hour Factor	0.92	0.92	0.92	0.92	0.92	0.92
Percent Heavy Veh, %	15	15	8	8	1	1
Cap, veh/h	1120		384	1760	1358	623
Arrive On Green	0.24	0.00	0.23	0.52	0.39	0.39
Sat Flow, veh/h	4731	1422	1697	3474	3483	1598
Grp Volume(v), veh/h	408	0	363	1120	1098	690
Grp Sat Flow(s),veh/h/ln	1527	1422	1697	1692	1742	1598
Q Serve(g_s), s	9.6	0.0	27.4	30.9	36.5	50.7
Cycle Q Clear(g_c), s	9.6	0.0	27.4	30.9	36.5	50.7
Prop In Lane		1.00	1.00		1.00	1.00
Lane Grp Cap(c), veh/h	1120		384	1760	1358	623
V/C Ratio(X)	0.36		0.95	0.64	0.81	1.11
Avail Cap(c_a), veh/h	1120		386	1760	1358	623
HCM Platoon Ratio	1.00	1.00	1.00	1.00	1.00	1.00
Upstream Filter(I)	1.00	0.00	0.81	0.81	1.00	1.00
Uniform Delay (d), s/veh	40.7	0.0	49.5	22.4	35.3	39.7
Incr Delay (d2), s/veh	0.9	0.0	28.0	1.4	5.3	69.2
Initial Q Delay(d3),s/veh	0.0	0.0	0.0	0.0	0.0	0.0
%ile BackOfQ(50%),veh/ln	3.7	0.0	14.6	12.4	16.3	31.5
Unsig. Movement Delay, s/veh						
LnGrp Delay(d),s/veh	41.6	0.0	77.5	23.8	40.6	108.8
LnGrp LOS	D		E	C	D	F
Approach Vol, veh/h	408	A		1483	1788	
Approach Delay, s/veh	41.6			37.0	66.9	
Approach LOS	D			D	E	

Timer - Assigned Phs	1	2				6	8
Phs Duration (G+Y+Rc), s	35.8	38.2				74.0	56.0
Change Period (Y+Rc), s	6.4	6.4				6.4	5.3
Max Green Setting (Gmax), s	29.6	31.6				67.6	50.7
Max Q Clear Time (g_c+I1), s	29.4	11.6				32.9	52.7
Green Ext Time (p_c), s	0.0	4.6				18.6	0.0

Intersection Summary	
HCM 6th Ctrl Delay	52.0
HCM 6th LOS	D

Notes

Unsignalized Delay for [EBR] is excluded from calculations of the approach delay and intersection delay.

Movement	EBL	EBT	EBR	WBL	WBT	WBR	NBL	NBT	NBR	SBL	SBT	SBR
Lane Configurations												
Traffic Volume (vph)	35	530	0	0	1844	531	0	0	380	0	0	660
Future Volume (vph)	35	530	0	0	1844	531	0	0	380	0	0	660
Ideal Flow (vphpl)	1900	1900	1900	1900	1900	1900	1900	1900	1900	1900	1900	1900
Total Lost time (s)	5.0	5.0			5.0	5.0			4.0			5.0
Lane Util. Factor	1.00	0.95			0.91	1.00			1.00			1.00
Frt	1.00	1.00			1.00	0.85			0.86			0.86
Flt Protected	0.95	1.00			1.00	1.00			1.00			1.00
Satd. Flow (prot)	1556	3112			4988	1553			1405			1522
Flt Permitted	0.95	1.00			1.00	1.00			1.00			1.00
Satd. Flow (perm)	1556	3112			4988	1553			1405			1522
Peak-hour factor, PHF	0.98	0.98	0.98	0.98	0.98	0.98	0.98	0.98	0.98	0.98	0.98	0.98
Adj. Flow (vph)	36	541	0	0	1882	542	0	0	388	0	0	673
RTOR Reduction (vph)	0	0	0	0	0	193	0	0	0	0	0	68
Lane Group Flow (vph)	36	541	0	0	1882	349	0	0	388	0	0	605
Heavy Vehicles (%)	16%	16%	16%	4%	4%	4%	17%	17%	17%	8%	8%	8%
Turn Type	Prot	NA			NA	custom			Free			pt+ov
Protected Phases	1	1 6 8			6	4 5 13						1 8
Permitted Phases						6			Free			8 1
Actuated Green, G (s)	24.2	96.0			57.0	70.8			110.0			34.0
Effective Green, g (s)	24.2	96.0			57.0	70.8			110.0			34.0
Actuated g/C Ratio	0.22	0.87			0.52	0.64			1.00			0.31
Clearance Time (s)	5.0				5.0							
Vehicle Extension (s)	2.0				2.0							
Lane Grp Cap (vph)	342	2715			2584	1070			1405			470
v/s Ratio Prot	0.02	0.17			c0.38	0.12						c0.40
v/s Ratio Perm						0.10			c0.28			
v/c Ratio	0.11	0.20			0.73	0.33			0.28			1.29
Uniform Delay, d1	34.3	1.1			20.5	8.8			0.0			38.0
Progression Factor	0.85	0.69			1.00	1.00			1.00			1.00
Incremental Delay, d2	0.0	0.0			1.8	0.1			0.5			144.2
Delay (s)	29.1	0.8			22.3	8.9			0.5			182.2
Level of Service	C	A			C	A			A			F
Approach Delay (s)		2.5			19.3			0.5			182.2	
Approach LOS		A			B			A			F	

Intersection Summary			
HCM 2000 Control Delay	42.1	HCM 2000 Level of Service	D
HCM 2000 Volume to Capacity ratio	0.97		
Actuated Cycle Length (s)	110.0	Sum of lost time (s)	20.0
Intersection Capacity Utilization	84.8%	ICU Level of Service	E
Analysis Period (min)	15		
c Critical Lane Group			

Movement	EBL	EBT	EBR	WBL	WBT	WBR	NBL	NBT	NBR	SBL	SBT	SBR
Lane Configurations												
Traffic Volume (vph)	445	195	80	690	565	1259	0	0	0	375	940	525
Future Volume (vph)	445	195	80	690	565	1259	0	0	0	375	940	525
Ideal Flow (vphpl)	1900	1900	1900	1900	1900	1900	1900	1900	1900	1900	1900	1900
Total Lost time (s)	5.0	5.0		5.0	5.0	4.0				5.0	5.0	5.0
Lane Util. Factor	0.97	0.95		1.00	0.95	1.00				0.97	0.95	0.95
Frpb, ped/bikes	1.00	0.99		1.00	1.00	1.00				1.00	1.00	1.00
Flpb, ped/bikes	1.00	1.00		1.00	1.00	1.00				1.00	1.00	1.00
Frt	1.00	0.96		1.00	1.00	0.85				1.00	1.00	0.85
Flt Protected	0.95	1.00		0.95	1.00	1.00				0.95	1.00	1.00
Satd. Flow (prot)	3335	3261		1719	3438	1538				3335	1719	1461
Flt Permitted	0.95	1.00		0.95	1.00	1.00				0.95	1.00	1.00
Satd. Flow (perm)	3335	3261		1719	3438	1538				3335	1719	1461
Peak-hour factor, PHF	0.97	0.97	0.97	0.97	0.97	0.97	0.97	0.97	0.97	0.97	0.97	0.97
Adj. Flow (vph)	459	201	82	711	582	1298	0	0	0	387	969	541
RTOR Reduction (vph)	0	40	0	0	0	4	0	0	0	0	0	0
Lane Group Flow (vph)	459	243	0	711	582	1294	0	0	0	387	969	541
Confl. Peds. (#/hr)			2	2								
Heavy Vehicles (%)	5%	5%	5%	5%	5%	5%	0%	0%	0%	5%	5%	5%
Turn Type	Split	NA		Split	NA	custom				Split	NA	custom
Protected Phases	2	2		3	3	7				4	4	4 5
Permitted Phases						7						
Actuated Green, G (s)	12.0	12.0		36.0	36.0	89.0				47.0	47.0	64.0
Effective Green, g (s)	12.0	12.0		36.0	36.0	89.0				47.0	47.0	64.0
Actuated g/C Ratio	0.11	0.11		0.33	0.33	0.81				0.43	0.43	0.58
Clearance Time (s)	5.0	5.0		5.0	5.0	4.0				5.0	5.0	
Vehicle Extension (s)	3.0	3.0		3.0	3.0	3.0				3.0	3.0	
Lane Grp Cap (vph)	363	355		562	1125	1244				1424	734	850
v/s Ratio Prot	c0.14	0.07		c0.41	0.17	0.84				0.12	c0.56	0.37
v/s Ratio Perm												
v/c Ratio	1.26	0.68		1.27	0.52	1.04				0.27	1.32	0.64
Uniform Delay, d1	49.0	47.2		37.0	30.0	10.5				20.4	31.5	15.3
Progression Factor	1.00	1.00		0.72	0.65	1.85				1.00	1.00	1.00
Incremental Delay, d2	139.3	5.4		127.7	1.0	31.0				0.1	153.6	1.6
Delay (s)	188.3	52.6		154.4	20.6	50.4				20.5	185.1	16.8
Level of Service	F	D		F	C	D				C	F	B
Approach Delay (s)		136.5			72.3			0.0			103.5	
Approach LOS		F			E			A			F	

Intersection Summary			
HCM 2000 Control Delay	92.7	HCM 2000 Level of Service	F
HCM 2000 Volume to Capacity ratio	1.29		
Actuated Cycle Length (s)	110.0	Sum of lost time (s)	15.0
Intersection Capacity Utilization	119.0%	ICU Level of Service	H
Analysis Period (min)	15		

c Critical Lane Group

Movement	EBL	EBT	EBR	WBL	WBT	WBR	NBL	NBT	NBR	SBL	SBT	SBR
Lane Configurations												
Traffic Volume (veh/h)	500	450	125	854	600	175	130	870	724	95	856	185
Future Volume (veh/h)	500	450	125	854	600	175	130	870	724	95	856	185
Initial Q (Qb), veh	0	0	0	0	0	0	0	0	0	0	0	0
Ped-Bike Adj(A_pbT)	1.00		1.00	1.00		1.00	1.00		1.00	1.00		1.00
Parking Bus, Adj	1.00	1.00	1.00	1.00	1.00	1.00	1.00	1.00	1.00	1.00	1.00	1.00
Work Zone On Approach		No			No			No			No	
Adj Sat Flow, veh/h/ln	1841	1841	1841	1856	1856	1856	1826	1826	1826	1811	1811	1811
Adj Flow Rate, veh/h	546	421	0	880	619	0	134	897	0	98	882	0
Peak Hour Factor	0.97	0.97	0.97	0.97	0.97	0.97	0.97	0.97	0.97	0.97	0.97	0.97
Percent Heavy Veh, %	4	4	4	3	3	3	5	5	5	6	6	6
Cap, veh/h	755	396		1278	671		159	997		128	940	
Arrive On Green	0.22	0.22	0.00	0.36	0.36	0.00	0.09	0.20	0.00	0.07	0.19	0.00
Sat Flow, veh/h	3506	1841	1560	3534	1856	1572	1739	4985	1547	1725	4944	1535
Grp Volume(v), veh/h	546	421	0	880	619	0	134	897	0	98	882	0
Grp Sat Flow(s),veh/h/ln	1753	1841	1560	1767	1856	1572	1739	1662	1547	1725	1648	1535
Q Serve(g_s), s	18.8	28.0	0.0	27.5	41.5	0.0	9.9	22.8	0.0	7.3	22.9	0.0
Cycle Q Clear(g_c), s	18.8	28.0	0.0	27.5	41.5	0.0	9.9	22.8	0.0	7.3	22.9	0.0
Prop In Lane	1.00		1.00	1.00		1.00	1.00		1.00	1.00		1.00
Lane Grp Cap(c), veh/h	755	396		1278	671		159	997		128	940	
V/C Ratio(X)	0.72	1.06		0.69	0.92		0.84	0.90		0.77	0.94	
Avail Cap(c_a), veh/h	755	396		1278	671		227	997		133	940	
HCM Platoon Ratio	1.00	1.00	1.00	1.00	1.00	1.00	1.00	1.00	1.00	1.00	1.00	1.00
Upstream Filter(I)	1.00	1.00	0.00	0.67	0.67	0.00	0.09	0.09	0.00	1.00	1.00	0.00
Uniform Delay (d), s/veh	47.4	51.0	0.0	35.3	39.8	0.0	58.1	50.7	0.0	59.1	51.9	0.0
Incr Delay (d2), s/veh	5.9	62.5	0.0	2.1	15.0	0.0	1.9	1.4	0.0	24.0	17.8	0.0
Initial Q Delay(d3),s/veh	0.0	0.0	0.0	0.0	0.0	0.0	0.0	0.0	0.0	0.0	0.0	0.0
%ile BackOfQ(50%),veh/ln	8.8	19.6	0.0	12.0	21.3	0.0	4.4	9.6	0.0	4.0	11.0	0.0
Unsig. Movement Delay, s/veh												
LnGrp Delay(d),s/veh	53.3	113.5	0.0	37.3	54.8	0.0	60.0	52.1	0.0	83.1	69.7	0.0
LnGrp LOS	D	F		D	D		E	D		F	E	
Approach Vol, veh/h		967	A		1499	A		1031	A		980	A
Approach Delay, s/veh		79.5			44.5			53.2			71.0	
Approach LOS		E			D			D			E	

Timer - Assigned Phs		2	3	4		6	7	8				
Phs Duration (G+Y+Rc), s		52.0	15.9	29.7		33.0	14.6	31.0				
Change Period (Y+Rc), s		5.0	4.0	5.0		5.0	5.0	* 5				
Max Green Setting (Gmax), s		47.0	17.0	19.0		28.0	10.0	* 26				
Max Q Clear Time (g_c+I1), s		43.5	11.9	24.9		30.0	9.3	24.8				
Green Ext Time (p_c), s		3.4	0.2	0.0		0.0	0.0	0.9				

Intersection Summary	
HCM 6th Ctrl Delay	59.9
HCM 6th LOS	E

Notes

User approved volume balancing among the lanes for turning movement.
* HCM 6th computational engine requires equal clearance times for the phases crossing the barrier.
User approved changes to right turn type.

Movement	EBL	EBT	EBR	WBL	WBT	WBR	NBL	NBT	NBR	SBL	SBT	SBR
Lane Configurations												
Traffic Volume (veh/h)	90	1169	5	5	1454	5	30	5	10	5	5	140
Future Volume (veh/h)	90	1169	5	5	1454	5	30	5	10	5	5	140
Initial Q (Qb), veh	0	0	0	0	0	0	0	0	0	0	0	0
Ped-Bike Adj(A_pbT)	1.00		1.00	1.00		1.00	1.00		1.00	1.00		1.00
Parking Bus, Adj	1.00	1.00	1.00	1.00	1.00	1.00	1.00	1.00	1.00	1.00	1.00	1.00
Work Zone On Approach		No			No			No			No	
Adj Sat Flow, veh/h/ln	1856	1856	1856	1856	1856	1856	1900	1900	1900	1885	1885	1885
Adj Flow Rate, veh/h	97	1257	5	5	1563	5	32	5	11	5	5	151
Peak Hour Factor	0.93	0.93	0.93	0.93	0.93	0.93	0.93	0.93	0.93	0.93	0.93	0.93
Percent Heavy Veh, %	3	3	3	3	3	3	0	0	0	1	1	1
Cap, veh/h	119	2679	11	11	2462	8	187	58	128	118	105	175
Arrive On Green	0.13	1.00	1.00	0.01	0.68	0.68	0.11	0.11	0.11	0.11	0.11	0.11
Sat Flow, veh/h	1767	3601	14	1767	3605	12	1250	528	1162	694	956	1598
Grp Volume(v), veh/h	97	615	647	5	764	804	32	0	16	10	0	151
Grp Sat Flow(s),veh/h/ln	1767	1763	1853	1767	1763	1853	1250	0	1691	1650	0	1598
Q Serve(g_s), s	6.9	0.0	0.0	0.4	31.5	31.5	3.1	0.0	1.1	0.0	0.0	12.1
Cycle Q Clear(g_c), s	6.9	0.0	0.0	0.4	31.5	31.5	3.7	0.0	1.1	0.6	0.0	12.1
Prop In Lane	1.00		0.01	1.00		0.01	1.00		0.69	0.50		1.00
Lane Grp Cap(c), veh/h	119	1311	1378	11	1204	1266	187	0	186	223	0	175
V/C Ratio(X)	0.82	0.47	0.47	0.45	0.63	0.63	0.17	0.00	0.09	0.04	0.00	0.86
Avail Cap(c_a), veh/h	155	1311	1378	155	1204	1266	357	0	416	257	0	209
HCM Platoon Ratio	2.00	2.00	2.00	1.00	1.00	1.00	1.00	1.00	1.00	1.00	1.00	1.00
Upstream Filter(I)	0.46	0.46	0.46	1.00	1.00	1.00	1.00	0.00	1.00	1.00	0.00	1.00
Uniform Delay (d), s/veh	55.5	0.0	0.0	64.4	11.5	11.5	53.4	0.0	52.0	51.8	0.0	56.9
Incr Delay (d2), s/veh	11.4	0.3	0.2	25.3	2.6	2.4	0.6	0.0	0.3	0.1	0.0	27.3
Initial Q Delay(d3),s/veh	0.0	0.0	0.0	0.0	0.0	0.0	0.0	0.0	0.0	0.0	0.0	0.0
%ile BackOfQ(50%),veh/ln	3.3	0.1	0.1	0.2	12.1	12.7	1.0	0.0	0.5	0.3	0.0	6.2
Unsig. Movement Delay, s/veh												
LnGrp Delay(d),s/veh	66.9	0.3	0.2	89.6	14.1	14.0	54.0	0.0	52.3	51.9	0.0	84.2
LnGrp LOS	E	A	A	F	B	B	D	A	D	D	A	F
Approach Vol, veh/h		1359			1573			48			161	
Approach Delay, s/veh		5.0			14.3			53.5			82.2	
Approach LOS		A			B			D			F	

Timer - Assigned Phs	1	2		4	5	6		8
Phs Duration (G+Y+Rc), s	15.3	95.4		19.3	7.4	103.3		19.3
Change Period (Y+Rc), s	6.6	6.6		5.0	6.6	6.6		5.0
Max Green Setting (Gmax), s	11.4	68.4		32.0	11.4	68.4		17.0
Max Q Clear Time (g_c+I1), s	8.9	33.5		5.7	2.4	2.0		14.1
Green Ext Time (p_c), s	0.1	34.6		0.2	0.0	32.9		0.2

Intersection Summary		
HCM 6th Ctrl Delay		14.3
HCM 6th LOS		B

Movement	EBL	EBT	EBR	WBL	WBT	WBR	NBL	NBT	NBR	SBL	SBT	SBR
Lane Configurations												
Traffic Volume (veh/h)	30	1099	55	35	1274	25	160	15	85	45	10	25
Future Volume (veh/h)	30	1099	55	35	1274	25	160	15	85	45	10	25
Initial Q (Qb), veh	0	0	0	0	0	0	0	0	0	0	0	0
Ped-Bike Adj(A_pbT)	1.00		0.99	1.00		0.99	1.00		0.98	1.00		0.94
Parking Bus, Adj	1.00	1.00	1.00	1.00	1.00	1.00	1.00	1.00	1.00	1.00	1.00	1.00
Work Zone On Approach		No			No			No			No	
Adj Sat Flow, veh/h/ln	1796	1796	1796	1856	1856	1856	1870	1870	1870	1826	1826	1826
Adj Flow Rate, veh/h	31	1121	56	36	1300	26	163	15	87	46	10	26
Peak Hour Factor	0.98	0.98	0.98	0.98	0.98	0.98	0.98	0.98	0.98	0.98	0.98	0.98
Percent Heavy Veh, %	7	7	7	3	3	3	2	2	2	5	5	5
Cap, veh/h	44	2222	111	49	2382	48	201	26	153	71	18	46
Arrive On Green	0.03	0.67	0.67	0.06	1.00	1.00	0.11	0.11	0.11	0.04	0.04	0.04
Sat Flow, veh/h	1711	3307	165	1767	3534	71	1781	234	1357	1739	429	1115
Grp Volume(v), veh/h	31	578	599	36	648	678	163	0	102	46	0	36
Grp Sat Flow(s),veh/h/ln	1711	1706	1766	1767	1763	1842	1781	0	1591	1739	0	1544
Q Serve(g_s), s	2.3	21.9	21.9	2.6	0.0	0.0	11.6	0.0	7.9	3.4	0.0	3.0
Cycle Q Clear(g_c), s	2.3	21.9	21.9	2.6	0.0	0.0	11.6	0.0	7.9	3.4	0.0	3.0
Prop In Lane	1.00		0.09	1.00		0.04	1.00		0.85	1.00		0.72
Lane Grp Cap(c), veh/h	44	1146	1186	49	1188	1242	201	0	180	71	0	63
V/C Ratio(X)	0.70	0.50	0.50	0.73	0.55	0.55	0.81	0.00	0.57	0.64	0.00	0.57
Avail Cap(c_a), veh/h	184	1146	1186	190	1188	1242	247	0	220	241	0	214
HCM Platoon Ratio	1.00	1.00	1.00	2.00	2.00	2.00	1.00	1.00	1.00	1.00	1.00	1.00
Upstream Filter(I)	1.00	1.00	1.00	0.82	0.82	0.82	1.00	0.00	1.00	1.00	0.00	1.00
Uniform Delay (d), s/veh	62.8	10.6	10.6	60.9	0.0	0.0	56.3	0.0	54.7	61.4	0.0	61.2
Incr Delay (d2), s/veh	18.0	1.6	1.5	15.3	1.5	1.4	16.9	0.0	4.0	12.9	0.0	10.8
Initial Q Delay(d3),s/veh	0.0	0.0	0.0	0.0	0.0	0.0	0.0	0.0	0.0	0.0	0.0	0.0
%ile BackOfQ(50%),veh/ln	1.2	8.2	8.4	1.4	0.5	0.5	6.2	0.0	3.4	1.8	0.0	1.4
Unsig. Movement Delay, s/veh												
LnGrp Delay(d),s/veh	80.8	12.2	12.1	76.2	1.5	1.4	73.3	0.0	58.6	74.3	0.0	72.0
LnGrp LOS	F	B	B	E	A	A	E	A	E	E	A	E
Approach Vol, veh/h		1208			1362			265			82	
Approach Delay, s/veh		13.9			3.4			67.6			73.3	
Approach LOS		B			A			E			E	

Timer - Assigned Phs	1	2		4	5	6		8
Phs Duration (G+Y+Rc), s	7.4	92.6		19.7	7.6	92.3		10.3
Change Period (Y+Rc), s	4.0	5.0		5.0	4.0	5.0		5.0
Max Green Setting (Gmax), s	14.0	61.0		18.0	14.0	61.0		18.0
Max Q Clear Time (g_c+I1), s	4.3	2.0		13.6	4.6	23.9		5.4
Green Ext Time (p_c), s	0.0	45.8		0.5	0.0	27.3		0.2

Intersection Summary	
HCM 6th Ctrl Delay	15.6
HCM 6th LOS	B

Notes

User approved pedestrian interval to be less than phase max green.

Movement	EBL	EBT	EBR	WBL	WBT	WBR	NBL	NBT	NBR	SBL	SBT	SBR
Lane Configurations												
Traffic Volume (veh/h)	20	1140	79	20	1265	95	59	10	25	60	5	15
Future Volume (veh/h)	20	1140	79	20	1265	95	59	10	25	60	5	15
Initial Q (Qb), veh	0	0	0	0	0	0	0	0	0	0	0	0
Ped-Bike Adj(A_pbT)	1.00		1.00	1.00		1.00	1.00		1.00	1.00		1.00
Parking Bus, Adj	1.00	1.00	1.00	1.00	1.00	1.00	1.00	1.00	1.00	1.00	1.00	1.00
Work Zone On Approach		No			No			No			No	
Adj Sat Flow, veh/h/ln	1841	1841	1841	1870	1870	1870	1307	1307	1307	1826	1826	1826
Adj Flow Rate, veh/h	21	1175	81	21	1304	98	61	10	26	62	5	15
Peak Hour Factor	0.97	0.97	0.97	0.97	0.97	0.97	0.97	0.97	0.97	0.97	0.97	0.97
Percent Heavy Veh, %	4	4	4	2	2	2	40	40	40	5	5	5
Cap, veh/h	36	2401	165	36	2423	182	109	19	30	218	16	261
Arrive On Green	0.04	1.00	1.00	0.02	0.72	0.72	0.15	0.15	0.15	0.15	0.15	0.15
Sat Flow, veh/h	1753	3319	229	1781	3351	251	431	126	204	1111	105	1544
Grp Volume(v), veh/h	21	618	638	21	690	712	97	0	0	67	0	15
Grp Sat Flow(s),veh/h/ln	1753	1749	1799	1781	1777	1825	761	0	0	1216	0	1544
Q Serve(g_s), s	1.5	0.0	0.0	1.5	22.8	23.0	10.6	0.0	0.0	0.0	0.0	1.1
Cycle Q Clear(g_c), s	1.5	0.0	0.0	1.5	22.8	23.0	17.1	0.0	0.0	6.5	0.0	1.1
Prop In Lane	1.00		0.13	1.00		0.14	0.63		0.27	0.93		1.00
Lane Grp Cap(c), veh/h	36	1265	1301	36	1285	1320	158	0	0	234	0	261
V/C Ratio(X)	0.59	0.49	0.49	0.58	0.54	0.54	0.61	0.00	0.00	0.29	0.00	0.06
Avail Cap(c_a), veh/h	94	1265	1301	69	1285	1320	195	0	0	283	0	317
HCM Platoon Ratio	2.00	2.00	2.00	1.00	1.00	1.00	1.00	1.00	1.00	1.00	1.00	1.00
Upstream Filter(I)	0.80	0.80	0.80	1.00	1.00	1.00	1.00	0.00	0.00	1.00	0.00	1.00
Uniform Delay (d), s/veh	61.8	0.0	0.0	63.1	8.1	8.2	56.3	0.0	0.0	49.8	0.0	45.3
Incr Delay (d2), s/veh	11.6	1.1	1.1	13.6	1.6	1.6	3.8	0.0	0.0	0.7	0.0	0.1
Initial Q Delay(d3),s/veh	0.0	0.0	0.0	0.0	0.0	0.0	0.0	0.0	0.0	0.0	0.0	0.0
%ile BackOfQ(50%),veh/ln	0.8	0.4	0.4	0.8	8.3	8.6	3.3	0.0	0.0	2.0	0.0	0.4
Unsig. Movement Delay, s/veh												
LnGrp Delay(d),s/veh	73.4	1.1	1.1	76.7	9.8	9.8	60.1	0.0	0.0	50.5	0.0	45.4
LnGrp LOS	E	A	A	E	A	A	E	A	A	D	A	D
Approach Vol, veh/h		1277			1423			97			82	
Approach Delay, s/veh		2.3			10.7			60.1			49.6	
Approach LOS		A			B			E			D	

Timer - Assigned Phs	1	2		4	5	6		8
Phs Duration (G+Y+Rc), s	6.7	99.0		24.3	6.7	99.0		24.3
Change Period (Y+Rc), s	4.0	5.0		5.0	4.0	5.0		5.0
Max Green Setting (Gmax), s	7.0	85.0		24.0	5.0	87.0		24.0
Max Q Clear Time (g_c+I1), s	3.5	25.0		8.5	3.5	2.0		19.1
Green Ext Time (p_c), s	0.0	49.9		0.2	0.0	65.5		0.1

Intersection Summary	
HCM 6th Ctrl Delay	9.7
HCM 6th LOS	A

Notes

User approved pedestrian interval to be less than phase max green.

Movement	EBL	EBT	EBR	WBL	WBT	WBR	NBL	NBT	NBR	SBL	SBT	SBR
Lane Configurations												
Traffic Volume (veh/h)	10	995	5	5	1349	10	10	0	5	10	0	5
Future Volume (veh/h)	10	995	5	5	1349	10	10	0	5	10	0	5
Initial Q (Qb), veh	0	0	0	0	0	0	0	0	0	0	0	0
Ped-Bike Adj(A_pbT)	1.00		1.00	1.00		1.00	1.00		1.00	1.00		1.00
Parking Bus, Adj	1.00	1.00	1.00	1.00	1.00	1.00	1.00	1.00	1.00	1.00	1.00	1.00
Work Zone On Approach		No			No			No			No	
Adj Sat Flow, veh/h/ln	1796	1796	1796	1781	1781	1781	1796	1796	1796	1633	1633	1633
Adj Flow Rate, veh/h	11	1118	6	6	1516	11	11	0	6	11	0	6
Peak Hour Factor	0.89	0.89	0.89	0.89	0.89	0.89	0.89	0.89	0.89	0.89	0.89	0.89
Percent Heavy Veh, %	7	7	7	8	8	8	7	7	7	18	18	18
Cap, veh/h	24	2344	1045	13	2304	1028	110	0	49	110	0	45
Arrive On Green	0.01	0.69	0.69	0.01	0.68	0.68	0.03	0.00	0.03	0.03	0.00	0.03
Sat Flow, veh/h	1711	3413	1522	1697	3385	1510	0	0	1522	0	0	1384
Grp Volume(v), veh/h	11	1118	6	6	1516	11	11	0	6	11	0	6
Grp Sat Flow(s),veh/h/ln	1711	1706	1522	1697	1692	1510	0	0	1522	0	0	1384
Q Serve(g_s), s	0.4	10.0	0.1	0.2	16.9	0.2	0.0	0.0	0.2	0.0	0.0	0.3
Cycle Q Clear(g_c), s	0.4	10.0	0.1	0.2	16.9	0.2	2.1	0.0	0.2	2.1	0.0	0.3
Prop In Lane	1.00		1.00	1.00		1.00	1.00		1.00	1.00		1.00
Lane Grp Cap(c), veh/h	24	2344	1045	13	2304	1028	110	0	49	110	0	45
V/C Ratio(X)	0.46	0.48	0.01	0.45	0.66	0.01	0.10	0.00	0.12	0.10	0.00	0.13
Avail Cap(c_a), veh/h	131	2784	1242	130	2761	1231	710	0	724	410	0	382
HCM Platoon Ratio	1.00	1.00	1.00	1.00	1.00	1.00	1.00	1.00	1.00	1.00	1.00	1.00
Upstream Filter(I)	1.00	1.00	1.00	1.00	1.00	1.00	1.00	0.00	1.00	1.00	0.00	1.00
Uniform Delay (d), s/veh	31.9	4.8	3.2	32.2	6.0	3.3	32.6	0.0	30.6	32.6	0.0	30.7
Incr Delay (d2), s/veh	13.5	0.3	0.0	21.7	0.8	0.0	0.4	0.0	1.1	0.8	0.0	2.8
Initial Q Delay(d3),s/veh	0.0	0.0	0.0	0.0	0.0	0.0	0.0	0.0	0.0	0.0	0.0	0.0
%ile BackOfQ(50%),veh/ln	0.3	2.4	0.0	0.2	4.2	0.0	0.2	0.0	0.1	0.2	0.0	0.1
Unsig. Movement Delay, s/veh												
LnGrp Delay(d),s/veh	45.4	5.1	3.2	53.9	6.8	3.4	33.0	0.0	31.7	33.4	0.0	33.5
LnGrp LOS	D	A	A	D	A	A	C	A	C	C	A	C
Approach Vol, veh/h		1135			1533			17			17	
Approach Delay, s/veh		5.5			7.0			32.5			33.5	
Approach LOS		A			A			C			C	

Timer - Assigned Phs	1	2		4	5	6		8
Phs Duration (G+Y+Rc), s	7.3	50.8		7.1	6.9	51.2		7.1
Change Period (Y+Rc), s	6.4	6.4		5.0	6.4	6.4		5.0
Max Green Setting (Gmax), s	5.0	53.2		18.0	5.0	53.2		31.0
Max Q Clear Time (g_c+I1), s	2.4	18.9		4.1	2.2	12.0		4.1
Green Ext Time (p_c), s	0.0	25.5		0.0	0.0	20.4		0.0

Intersection Summary	
HCM 6th Ctrl Delay	6.7
HCM 6th LOS	A

Intersection	
Int Delay, s/veh	1.3

Movement	EBL	EBT	WBT	WBR	SBL	SBR
Lane Configurations						
Traffic Vol, veh/h	14	105	110	9	5	17
Future Vol, veh/h	14	105	110	9	5	17
Conflicting Peds, #/hr	0	0	0	0	0	0
Sign Control	Free	Free	Free	Free	Stop	Stop
RT Channelized	-	None	-	None	-	None
Storage Length	450	-	-	-	0	-
Veh in Median Storage, #	-	0	0	-	0	-
Grade, %	-	0	0	-	0	-
Peak Hour Factor	82	82	82	82	82	82
Heavy Vehicles, %	86	86	77	77	54	54
Mvmt Flow	17	128	134	11	6	21

Major/Minor	Major1		Major2		Minor2	
Conflicting Flow All	145	0	-	0	302	140
Stage 1	-	-	-	-	140	-
Stage 2	-	-	-	-	162	-
Critical Hdwy	4.96	-	-	-	6.94	6.74
Critical Hdwy Stg 1	-	-	-	-	5.94	-
Critical Hdwy Stg 2	-	-	-	-	5.94	-
Follow-up Hdwy	2.974	-	-	-	3.986	3.786
Pot Cap-1 Maneuver	1052	-	-	-	594	787
Stage 1	-	-	-	-	774	-
Stage 2	-	-	-	-	755	-
Platoon blocked, %		-	-	-		
Mov Cap-1 Maneuver	1052	-	-	-	584	787
Mov Cap-2 Maneuver	-	-	-	-	584	-
Stage 1	-	-	-	-	762	-
Stage 2	-	-	-	-	755	-

Approach	EB	WB	SB
HCM Control Delay, s	1	0	10.1
HCM LOS			B

Minor Lane/Major Mvmt	EBL	EBT	WBT	WBR	SBLn1
Capacity (veh/h)	1052	-	-	-	729
HCM Lane V/C Ratio	0.016	-	-	-	0.037
HCM Control Delay (s)	8.5	-	-	-	10.1
HCM Lane LOS	A	-	-	-	B
HCM 95th %tile Q(veh)	0	-	-	-	0.1

Intersection	
Int Delay, s/veh	4.7

Movement	EBL	EBT	EBR	WBL	WBT	WBR	NBL	NBT	NBR	SBL	SBT	SBR
Lane Configurations												
Traffic Vol, veh/h	35	104	50	15	102	5	55	0	10	5	10	35
Future Vol, veh/h	35	104	50	15	102	5	55	0	10	5	10	35
Conflicting Peds, #/hr	0	0	0	0	0	0	0	0	0	0	0	0
Sign Control	Free	Free	Free	Free	Free	Free	Stop	Stop	Stop	Stop	Stop	Stop
RT Channelized	-	-	None	-	-	None	-	-	None	-	-	None
Storage Length	-	-	-	-	-	-	-	-	-	-	-	-
Veh in Median Storage, #	-	0	-	-	0	-	-	0	-	-	0	-
Grade, %	-	0	-	-	0	-	-	0	-	-	0	-
Peak Hour Factor	82	82	82	82	82	82	82	82	82	82	82	82
Heavy Vehicles, %	36	36	36	30	30	30	35	35	35	91	91	91
Mvmt Flow	43	127	61	18	124	6	67	0	12	6	12	43

Major/Minor	Major1			Major2			Minor1			Minor2		
Conflicting Flow All	130	0	0	188	0	0	435	410	94	313	437	127
Stage 1	-	-	-	-	-	-	244	244	-	163	163	-
Stage 2	-	-	-	-	-	-	191	166	-	150	274	-
Critical Hdwy	4.64	-	-	4.55	-	-	7.825	7.025	7.425	8.665	7.865	7.565
Critical Hdwy Stg 1	-	-	-	-	-	-	7.025	6.025	-	7.465	6.865	-
Critical Hdwy Stg 2	-	-	-	-	-	-	6.625	6.025	-	7.865	6.865	-
Follow-up Hdwy	2.542	-	-	2.485	-	-	3.8325	4.3325	3.6325	4.3645	4.8645	4.1645
Pot Cap-1 Maneuver	1254	-	-	1218	-	-	456	473	856	467	377	712
Stage 1	-	-	-	-	-	-	663	637	-	648	604	-
Stage 2	-	-	-	-	-	-	730	694	-	650	525	-
Platoon blocked, %		-	-		-	-						
Mov Cap-1 Maneuver	1254	-	-	1218	-	-	400	447	856	441	357	712
Mov Cap-2 Maneuver	-	-	-	-	-	-	400	447	-	441	357	-
Stage 1	-	-	-	-	-	-	637	612	-	623	594	-
Stage 2	-	-	-	-	-	-	661	683	-	616	505	-

Approach	EB	WB	NB	SB
HCM Control Delay, s	1.5	1	15.1	12.1
HCM LOS			C	B

Minor Lane/Major Mvmt	NBLn1	EBL	EBT	EBR	WBL	WBT	WBR	SBLn1
Capacity (veh/h)	436	1254	-	-	1218	-	-	565
HCM Lane V/C Ratio	0.182	0.034	-	-	0.015	-	-	0.108
HCM Control Delay (s)	15.1	8	0.1	-	8	0	-	12.1
HCM Lane LOS	C	A	A	-	A	A	-	B
HCM 95th %tile Q(veh)	0.7	0.1	-	-	0	-	-	0.4

Movement	WBL	WBR	NBT	NBR	SBL	SBT
Lane Configurations						
Traffic Volume (veh/h)	69	128	440	92	107	450
Future Volume (veh/h)	69	128	440	92	107	450
Initial Q (Qb), veh	0	0	0	0	0	0
Ped-Bike Adj(A_pbT)	1.00	1.00		1.00	1.00	
Parking Bus, Adj	1.00	1.00	1.00	1.00	1.00	1.00
Work Zone On Approach	No		No			No
Adj Sat Flow, veh/h/ln	1233	1233	1796	1796	1678	1678
Adj Flow Rate, veh/h	75	139	478	100	116	489
Peak Hour Factor	0.92	0.92	0.92	0.92	0.92	0.92
Percent Heavy Veh, %	45	45	7	7	15	15
Cap, veh/h	86	159	549	115	284	907
Arrive On Green	0.23	0.23	0.38	0.38	0.07	0.54
Sat Flow, veh/h	379	703	1441	301	1598	1678
Grp Volume(v), veh/h	215	0	0	578	116	489
Grp Sat Flow(s),veh/h/ln	1088	0	0	1742	1598	1678
Q Serve(g_s), s	11.7	0.0	0.0	18.9	2.5	11.6
Cycle Q Clear(g_c), s	11.7	0.0	0.0	18.9	2.5	11.6
Prop In Lane	0.35	0.65		0.17	1.00	
Lane Grp Cap(c), veh/h	245	0	0	664	284	907
V/C Ratio(X)	0.88	0.00	0.00	0.87	0.41	0.54
Avail Cap(c_a), veh/h	419	0	0	765	305	1006
HCM Platoon Ratio	1.00	1.00	1.00	1.00	1.00	1.00
Upstream Filter(I)	1.00	0.00	0.00	1.00	1.00	1.00
Uniform Delay (d), s/veh	23.0	0.0	0.0	17.6	13.1	9.2
Incr Delay (d2), s/veh	10.4	0.0	0.0	10.3	1.3	0.7
Initial Q Delay(d3),s/veh	0.0	0.0	0.0	0.0	0.0	0.0
%ile BackOfQ(50%),veh/ln	3.5	0.0	0.0	8.5	0.8	3.6
Unsig. Movement Delay, s/veh						
LnGrp Delay(d),s/veh	33.4	0.0	0.0	27.9	14.4	9.9
LnGrp LOS	C	A	A	C	B	A
Approach Vol, veh/h	215		578			605
Approach Delay, s/veh	33.4		27.9			10.7
Approach LOS	C		C			B

Timer - Assigned Phs	1	2				6	8
Phs Duration (G+Y+Rc), s	9.8	31.5				41.3	20.2
Change Period (Y+Rc), s	5.5	* 8.1				* 8.1	6.3
Max Green Setting (Gmax), s	5.1	* 27				* 37	23.7
Max Q Clear Time (g_c+I1), s	4.5	20.9				13.6	13.7
Green Ext Time (p_c), s	0.0	2.5				4.6	0.5

Intersection Summary	
HCM 6th Ctrl Delay	21.3
HCM 6th LOS	C

Notes

User approved pedestrian interval to be less than phase max green.

User approved volume balancing among the lanes for turning movement.

* HCM 6th computational engine requires equal clearance times for the phases crossing the barrier.

Movement	EBL	EBR	NBL	NBT	SBT	SBR
Lane Configurations						
Traffic Volume (vph)	70	70	90	435	374	90
Future Volume (vph)	70	70	90	435	374	90
Ideal Flow (vphpl)	1900	1900	1900	1900	1900	1900
Total Lost time (s)	5.0	5.0	6.5	6.5	6.5	6.5
Lane Util. Factor	1.00	1.00	1.00	1.00	1.00	1.00
Frt	1.00	0.85	1.00	1.00	1.00	0.85
Flt Protected	0.95	1.00	0.95	1.00	1.00	1.00
Satd. Flow (prot)	1671	1495	1719	1810	1792	1524
Flt Permitted	0.95	1.00	0.39	1.00	1.00	1.00
Satd. Flow (perm)	1671	1495	699	1810	1792	1524
Peak-hour factor, PHF	0.96	0.96	0.96	0.96	0.96	0.96
Adj. Flow (vph)	73	73	94	453	390	94
RTOR Reduction (vph)	0	65	0	0	0	44
Lane Group Flow (vph)	73	8	94	453	390	50
Heavy Vehicles (%)	8%	8%	5%	5%	6%	6%
Turn Type	custom	custom	pm+pt	NA	NA	Perm
Protected Phases	3	3	5	2	6	
Permitted Phases	4	4	2			6
Actuated Green, G (s)	5.5	5.5	34.9	34.9	22.9	22.9
Effective Green, g (s)	5.5	5.5	34.9	34.9	22.9	22.9
Actuated g/C Ratio	0.11	0.11	0.67	0.67	0.44	0.44
Clearance Time (s)	5.0	5.0	6.5	6.5	6.5	6.5
Vehicle Extension (s)	2.0	2.0	2.0	5.0	5.0	5.0
Lane Grp Cap (vph)	177	158	578	1217	790	672
v/s Ratio Prot	c0.04	0.01	0.02	c0.25	c0.22	
v/s Ratio Perm			0.09			0.03
v/c Ratio	0.41	0.05	0.16	0.37	0.49	0.08
Uniform Delay, d1	21.7	20.8	3.6	3.7	10.4	8.4
Progression Factor	1.00	1.00	1.00	1.00	1.00	1.00
Incremental Delay, d2	0.6	0.0	0.0	0.4	1.0	0.1
Delay (s)	22.3	20.9	3.7	4.1	11.4	8.5
Level of Service	C	C	A	A	B	A
Approach Delay (s)	21.6			4.0	10.8	
Approach LOS	C			A	B	

Intersection Summary			
HCM 2000 Control Delay	9.0	HCM 2000 Level of Service	A
HCM 2000 Volume to Capacity ratio	0.55		
Actuated Cycle Length (s)	51.9	Sum of lost time (s)	21.0
Intersection Capacity Utilization	43.8%	ICU Level of Service	A
Analysis Period (min)	15		
c Critical Lane Group			

Movement	EBL	EBR	NBL	NBT	SBT	SBR
Lane Configurations						
Traffic Volume (vph)	175	10	10	350	300	144
Future Volume (vph)	175	10	10	350	300	144
Ideal Flow (vphpl)	1900	1900	1900	1900	1900	1900
Total Lost time (s)	5.0	5.0	6.0	6.0	6.0	5.0
Lane Util. Factor	1.00	1.00	1.00	1.00	1.00	1.00
Frpb, ped/bikes	1.00	1.00	1.00	1.00	1.00	0.99
Flpb, ped/bikes	1.00	1.00	1.00	1.00	1.00	1.00
Frt	1.00	0.85	1.00	1.00	1.00	0.85
Flt Protected	0.95	1.00	0.95	1.00	1.00	1.00
Satd. Flow (prot)	1671	1495	1736	1827	1792	1506
Flt Permitted	0.95	1.00	0.39	1.00	1.00	1.00
Satd. Flow (perm)	1671	1495	707	1827	1792	1506
Peak-hour factor, PHF	0.95	0.95	0.95	0.95	0.95	0.95
Adj. Flow (vph)	184	11	11	368	316	152
RTOR Reduction (vph)	0	8	0	0	0	67
Lane Group Flow (vph)	184	3	11	368	316	85
Confl. Bikes (#/hr)						1
Heavy Vehicles (%)	8%	8%	4%	4%	6%	6%
Turn Type	custom	custom	pm+pt	NA	NA	pm+ov
Protected Phases	3	3	5	2	6	3
Permitted Phases	4	4	2			6
Actuated Green, G (s)	9.9	9.9	19.5	19.5	12.8	22.7
Effective Green, g (s)	9.9	9.9	19.5	19.5	12.8	22.7
Actuated g/C Ratio	0.25	0.25	0.48	0.48	0.32	0.56
Clearance Time (s)	5.0	5.0	6.0	6.0	6.0	5.0
Vehicle Extension (s)	2.0	2.0	2.0	2.0	2.0	2.0
Lane Grp Cap (vph)	409	366	359	881	567	846
v/s Ratio Prot	c0.11	0.00	0.00	c0.20	c0.18	0.02
v/s Ratio Perm			0.01			0.03
v/c Ratio	0.45	0.01	0.03	0.42	0.56	0.10
Uniform Delay, d1	12.9	11.5	5.9	6.8	11.4	4.1
Progression Factor	1.00	1.00	1.00	1.00	1.00	1.00
Incremental Delay, d2	0.3	0.0	0.0	0.1	0.7	0.0
Delay (s)	13.2	11.5	5.9	6.9	12.1	4.1
Level of Service	B	B	A	A	B	A
Approach Delay (s)	13.1			6.9	9.5	
Approach LOS	B			A	A	

Intersection Summary			
HCM 2000 Control Delay	9.2	HCM 2000 Level of Service	A
HCM 2000 Volume to Capacity ratio	0.65		
Actuated Cycle Length (s)	40.4	Sum of lost time (s)	20.0
Intersection Capacity Utilization	37.3%	ICU Level of Service	A
Analysis Period (min)	15		

c Critical Lane Group

Intersection	
Int Delay, s/veh	1.1

Movement	EBL	EBT	EBR	WBL	WBT	WBR	NBL	NBT	NBR	SBL	SBT	SBR
Lane Configurations												
Traffic Vol, veh/h	0	0	0	25	0	15	20	235	0	0	105	170
Future Vol, veh/h	0	0	0	25	0	15	20	235	0	0	105	170
Conflicting Peds, #/hr	0	0	0	0	0	0	0	0	0	0	0	0
Sign Control	Stop	Stop	Stop	Stop	Stop	Stop	Free	Free	Free	Free	Free	Free
RT Channelized	-	-	None	-	-	None	-	-	None	-	-	None
Storage Length	-	-	-	-	-	500	175	-	-	-	-	375
Veh in Median Storage, #	-	1	-	-	0	-	-	0	-	-	0	-
Grade, %	-	0	-	-	0	-	-	0	-	-	0	-
Peak Hour Factor	92	92	92	92	92	92	92	92	92	92	92	92
Heavy Vehicles, %	0	0	0	7	7	7	6	6	6	4	4	4
Mvmt Flow	0	0	0	27	0	16	22	255	0	0	114	185

Major/Minor	Minor1		Major1			Major2			
Conflicting Flow All	506	598	255	299	0	-	-	-	0
Stage 1	299	299	-	-	-	-	-	-	-
Stage 2	207	299	-	-	-	-	-	-	-
Critical Hdwy	6.47	6.57	6.27	4.16	-	-	-	-	-
Critical Hdwy Stg 1	5.47	5.57	-	-	-	-	-	-	-
Critical Hdwy Stg 2	5.47	5.57	-	-	-	-	-	-	-
Follow-up Hdwy	3.563	4.063	3.363	2.254	-	-	-	-	-
Pot Cap-1 Maneuver	517	409	772	1240	-	0	0	-	-
Stage 1	741	657	-	-	-	0	0	-	-
Stage 2	816	657	-	-	-	0	0	-	-
Platoon blocked, %					-			-	-
Mov Cap-1 Maneuver	508	0	772	1240	-	-	-	-	-
Mov Cap-2 Maneuver	508	0	-	-	-	-	-	-	-
Stage 1	728	0	-	-	-	-	-	-	-
Stage 2	816	0	-	-	-	-	-	-	-

Approach	WB	NB	SB
HCM Control Delay, s	11.5	0.6	0
HCM LOS	B		

Minor Lane/Major Mvmt	NBL	NBT	WBLn1	WBLn2	SBT	SBR
Capacity (veh/h)	1240	-	508	772	-	-
HCM Lane V/C Ratio	0.018	-	0.053	0.021	-	-
HCM Control Delay (s)	8	-	12.5	9.8	-	-
HCM Lane LOS	A	-	B	A	-	-
HCM 95th %tile Q(veh)	0.1	-	0.2	0.1	-	-

Movement	EBL	EBR	NBL	NBT	SBT	SBR
Lane Configurations						
Traffic Volume (veh/h)	160	10	25	115	120	15
Future Volume (veh/h)	160	10	25	115	120	15
Initial Q (Qb), veh	0	0	0	0	0	0
Ped-Bike Adj(A_pbT)	1.00	1.00	1.00			0.98
Parking Bus, Adj	1.00	1.00	1.00	1.00	1.00	1.00
Work Zone On Approach	No			No	No	
Adj Sat Flow, veh/h/ln	1841	1841	1811	1811	1752	1752
Adj Flow Rate, veh/h	184	11	29	132	138	17
Peak Hour Factor	0.87	0.87	0.87	0.87	0.87	0.87
Percent Heavy Veh, %	4	4	6	6	10	10
Cap, veh/h	390	347	231	269	305	38
Arrive On Green	0.22	0.22	0.20	0.20	0.20	0.20
Sat Flow, veh/h	1753	1560	180	1345	1525	188
Grp Volume(v), veh/h	184	11	161	0	0	155
Grp Sat Flow(s),veh/h/ln	1753	1560	1524	0	0	1713
Q Serve(g_s), s	2.0	0.1	0.5	0.0	0.0	1.7
Cycle Q Clear(g_c), s	2.0	0.1	2.3	0.0	0.0	1.7
Prop In Lane	1.00	1.00	0.18			0.11
Lane Grp Cap(c), veh/h	390	347	500	0	0	343
V/C Ratio(X)	0.47	0.03	0.32	0.00	0.00	0.45
Avail Cap(c_a), veh/h	3914	3483	4626	0	0	2647
HCM Platoon Ratio	1.00	1.00	1.00	1.00	1.00	1.00
Upstream Filter(I)	1.00	1.00	1.00	0.00	0.00	1.00
Uniform Delay (d), s/veh	7.4	6.6	7.8	0.0	0.0	7.7
Incr Delay (d2), s/veh	0.9	0.0	0.8	0.0	0.0	2.0
Initial Q Delay(d3),s/veh	0.0	0.0	0.0	0.0	0.0	0.0
%ile BackOfQ(50%),veh/ln	0.5	0.0	0.5	0.0	0.0	0.5
Unsig. Movement Delay, s/veh						
LnGrp Delay(d),s/veh	8.3	6.7	8.6	0.0	0.0	9.7
LnGrp LOS	A	A	A	A	A	A
Approach Vol, veh/h	195			161	155	
Approach Delay, s/veh	8.2			8.6	9.7	
Approach LOS	A			A	A	

Timer - Assigned Phs		2		4		6
Phs Duration (G+Y+Rc), s		10.7		11.2		10.7
Change Period (Y+Rc), s		6.3		6.3		6.3
Max Green Setting (Gmax), s		58.7		48.7		33.7
Max Q Clear Time (g_c+I1), s		4.3		4.0		3.7
Green Ext Time (p_c), s		2.1		0.6		1.7

Intersection Summary	
HCM 6th Ctrl Delay	8.7
HCM 6th LOS	A

Movement	EBL	EBT	EBR	WBL	WBT	WBR	NBL	NBT	NBR	SBL	SBT	SBR
Lane Configurations												
Traffic Volume (veh/h)	100	10	15	5	0	10	15	558	10	15	537	95
Future Volume (veh/h)	100	10	15	5	0	10	15	558	10	15	537	95
Initial Q (Qb), veh	0	0	0	0	0	0	0	0	0	0	0	0
Ped-Bike Adj(A_pbT)	1.00		0.98	1.00		1.00	1.00		0.98	1.00		1.00
Parking Bus, Adj	1.00	1.00	1.00	1.00	1.00	1.00	1.00	1.00	1.00	1.00	1.00	1.00
Work Zone On Approach		No			No			No			No	
Adj Sat Flow, veh/h/ln	1856	1856	1856	1559	1559	1559	1663	1663	1663	1678	1678	1678
Adj Flow Rate, veh/h	105	11	16	5	0	11	16	587	11	16	565	100
Peak Hour Factor	0.95	0.95	0.95	0.95	0.95	0.95	0.95	0.95	0.95	0.95	0.95	0.95
Percent Heavy Veh, %	3	3	3	23	23	23	16	16	16	15	15	15
Cap, veh/h	235	17	21	307	0	276	274	772	14	262	797	675
Arrive On Green	0.12	0.12	0.12	0.00	0.00	0.21	0.01	0.47	0.47	0.01	0.47	0.47
Sat Flow, veh/h	1125	144	175	1485	0	1321	1584	1626	30	1598	1678	1422
Grp Volume(v), veh/h	132	0	0	5	0	11	16	0	598	16	565	100
Grp Sat Flow(s),veh/h/ln	1445	0	0	1485	0	1321	1584	0	1657	1598	1678	1422
Q Serve(g_s), s	5.5	0.0	0.0	0.2	0.0	0.4	0.3	0.0	19.0	0.3	17.1	2.5
Cycle Q Clear(g_c), s	5.7	0.0	0.0	0.2	0.0	0.4	0.3	0.0	19.0	0.3	17.1	2.5
Prop In Lane	0.80		0.12	1.00		1.00	1.00		0.02	1.00		1.00
Lane Grp Cap(c), veh/h	273	0	0	307	0	276	274	0	787	262	797	675
V/C Ratio(X)	0.48	0.00	0.00	0.02	0.00	0.04	0.06	0.00	0.76	0.06	0.71	0.15
Avail Cap(c_a), veh/h	509	0	0	638	0	911	862	0	1499	731	1387	1176
HCM Platoon Ratio	1.00	1.00	1.00	1.00	1.00	1.00	1.00	1.00	1.00	1.00	1.00	1.00
Upstream Filter(I)	1.00	0.00	0.00	1.00	0.00	1.00	1.00	0.00	1.00	1.00	1.00	1.00
Uniform Delay (d), s/veh	27.3	0.0	0.0	23.0	0.0	20.2	10.8	0.0	13.8	11.4	13.3	9.5
Incr Delay (d2), s/veh	1.9	0.0	0.0	0.0	0.0	0.1	0.1	0.0	3.3	0.1	2.5	0.2
Initial Q Delay(d3),s/veh	0.0	0.0	0.0	0.0	0.0	0.0	0.0	0.0	0.0	0.0	0.0	0.0
%ile BackOfQ(50%),veh/ln	2.0	0.0	0.0	0.1	0.0	0.1	0.1	0.0	6.7	0.1	6.0	0.7
Unsig. Movement Delay, s/veh												
LnGrp Delay(d),s/veh	29.2	0.0	0.0	23.0	0.0	20.3	10.9	0.0	17.1	11.5	15.8	9.7
LnGrp LOS	C	A	A	C	A	C	B	A	B	B	B	A
Approach Vol, veh/h		132			16			614			681	
Approach Delay, s/veh		29.2			21.1			16.9			14.8	
Approach LOS		C			C			B			B	

Timer - Assigned Phs	1	2	3	4	5	6		8
Phs Duration (G+Y+Rc), s	6.2	37.5	5.8	14.5	6.2	37.5		20.3
Change Period (Y+Rc), s	5.5	7.1	5.5	6.9	5.5	7.1		* 6.9
Max Green Setting (Gmax), s	19.5	57.9	14.5	18.1	24.5	52.9		* 44
Max Q Clear Time (g_c+I1), s	2.3	21.0	2.2	7.7	2.3	19.1		2.4
Green Ext Time (p_c), s	0.0	9.4	0.0	0.6	0.0	9.4		0.0

Intersection Summary	
HCM 6th Ctrl Delay	17.1
HCM 6th LOS	B

Notes

* HCM 6th computational engine requires equal clearance times for the phases crossing the barrier.

Movement	EBL	EBT	EBR	WBL	WBT	WBR	NBL	NBT	NBR	SBL	SBT	SBR
Lane Configurations												
Traffic Volume (veh/h)	340	597	65	10	544	129	65	40	15	145	40	335
Future Volume (veh/h)	340	597	65	10	544	129	65	40	15	145	40	335
Initial Q (Qb), veh	0	0	0	0	0	0	0	0	0	0	0	0
Ped-Bike Adj(A_pbT)	1.00		1.00	1.00		1.00	1.00		0.99	1.00		0.99
Parking Bus, Adj	1.00	1.00	1.00	1.00	1.00	1.00	1.00	1.00	1.00	1.00	1.00	1.00
Work Zone On Approach		No			No			No			No	
Adj Sat Flow, veh/h/ln	1767	1767	1767	1767	1767	1767	1885	1885	1885	1826	1826	1826
Adj Flow Rate, veh/h	351	615	67	10	561	133	67	41	15	149	41	345
Peak Hour Factor	0.97	0.97	0.97	0.97	0.97	0.97	0.97	0.97	0.97	0.97	0.97	0.97
Percent Heavy Veh, %	9	9	9	9	9	9	1	1	1	5	5	5
Cap, veh/h	383	1930	859	16	1197	533	86	200	73	176	376	669
Arrive On Green	0.23	0.57	0.57	0.01	0.36	0.36	0.05	0.15	0.15	0.10	0.21	0.21
Sat Flow, veh/h	1682	3357	1495	1682	3357	1493	1795	1314	481	1739	1826	1538
Grp Volume(v), veh/h	351	615	67	10	561	133	67	0	56	149	41	345
Grp Sat Flow(s),veh/h/ln	1682	1678	1495	1682	1678	1493	1795	0	1794	1739	1826	1538
Q Serve(g_s), s	25.1	11.8	2.5	0.7	15.9	7.8	4.6	0.0	3.4	10.4	2.3	20.2
Cycle Q Clear(g_c), s	25.1	11.8	2.5	0.7	15.9	7.8	4.6	0.0	3.4	10.4	2.3	20.2
Prop In Lane	1.00		1.00	1.00		1.00	1.00		0.27	1.00		1.00
Lane Grp Cap(c), veh/h	383	1930	859	16	1197	533	86	0	273	176	376	669
V/C Ratio(X)	0.92	0.32	0.08	0.63	0.47	0.25	0.78	0.00	0.20	0.85	0.11	0.52
Avail Cap(c_a), veh/h	572	1930	859	54	1197	533	160	0	523	268	651	900
HCM Platoon Ratio	1.00	1.00	1.00	1.00	1.00	1.00	1.00	1.00	1.00	1.00	1.00	1.00
Upstream Filter(I)	1.00	1.00	1.00	1.00	1.00	1.00	1.00	0.00	1.00	1.00	1.00	1.00
Uniform Delay (d), s/veh	46.6	13.7	11.7	61.0	30.7	28.1	58.1	0.0	45.8	54.5	39.9	25.6
Incr Delay (d2), s/veh	14.7	0.4	0.2	34.9	1.3	1.1	13.8	0.0	0.4	14.2	0.1	0.6
Initial Q Delay(d3),s/veh	0.0	0.0	0.0	0.0	0.0	0.0	0.0	0.0	0.0	0.0	0.0	0.0
%ile BackOfQ(50%),veh/ln	12.0	4.5	0.9	0.5	6.7	3.0	2.4	0.0	1.5	5.2	1.0	7.5
Unsig. Movement Delay, s/veh												
LnGrp Delay(d),s/veh	61.2	14.1	11.9	95.8	32.0	29.2	71.9	0.0	46.2	68.7	40.0	26.2
LnGrp LOS	E	B	B	F	C	C	E	A	D	E	D	C
Approach Vol, veh/h		1033			704			123			535	
Approach Delay, s/veh		30.0			32.4			60.2			39.1	
Approach LOS		C			C			E			D	

Timer - Assigned Phs	1	2	3	4	5	6	7	8
Phs Duration (G+Y+Rc), s	6.2	76.0	10.9	30.4	33.1	49.1	17.5	23.8
Change Period (Y+Rc), s	5.0	5.0	5.0	5.0	5.0	5.0	5.0	5.0
Max Green Setting (Gmax), s	4.0	71.0	11.0	44.0	42.0	33.0	19.0	36.0
Max Q Clear Time (g_c+I1), s	2.7	13.8	6.6	22.2	27.1	17.9	12.4	5.4
Green Ext Time (p_c), s	0.0	5.2	0.0	1.4	1.0	3.8	0.2	0.3

Intersection Summary	
HCM 6th Ctrl Delay	34.3
HCM 6th LOS	C

Movement	EBT	EBR	WBL	WBT	NBL	NBR
Lane Configurations						
Traffic Volume (veh/h)	702	415	229	715	495	305
Future Volume (veh/h)	702	415	229	715	495	305
Initial Q (Qb), veh	0	0	0	0	0	0
Ped-Bike Adj(A_pbT)		1.00	1.00		1.00	1.00
Parking Bus, Adj	1.00	1.00	1.00	1.00	1.00	1.00
Work Zone On Approach	No			No	No	
Adj Sat Flow, veh/h/ln	1737	1737	1722	1722	1856	1856
Adj Flow Rate, veh/h	724	0	236	737	510	314
Peak Hour Factor	0.97	0.97	0.97	0.97	0.97	0.97
Percent Heavy Veh, %	11	11	12	12	3	3
Cap, veh/h	2693		263	2522	519	490
Arrive On Green	0.57	0.00	0.16	0.77	0.15	0.15
Sat Flow, veh/h	4898	1472	1640	3358	3428	1572
Grp Volume(v), veh/h	724	0	236	737	510	314
Grp Sat Flow(s),veh/h/ln	1581	1472	1640	1636	1714	1572
Q Serve(g_s), s	11.7	0.0	21.2	10.0	22.2	22.7
Cycle Q Clear(g_c), s	11.7	0.0	21.2	10.0	22.2	22.7
Prop In Lane		1.00	1.00		1.00	1.00
Lane Grp Cap(c), veh/h	2693		263	2522	519	490
V/C Ratio(X)	0.27		0.90	0.29	0.98	0.64
Avail Cap(c_a), veh/h	2693		477	2522	519	490
HCM Platoon Ratio	1.00	1.00	1.00	1.00	1.00	1.00
Upstream Filter(I)	1.00	0.00	0.93	0.93	1.00	1.00
Uniform Delay (d), s/veh	16.5	0.0	61.8	5.1	63.5	44.4
Incr Delay (d2), s/veh	0.2	0.0	11.7	0.3	35.1	3.2
Initial Q Delay(d3),s/veh	0.0	0.0	0.0	0.0	0.0	0.0
%ile BackOfQ(50%),veh/ln	4.4	0.0	9.7	3.3	12.3	10.6
Unsig. Movement Delay, s/veh						
LnGrp Delay(d),s/veh	16.8	0.0	73.5	5.4	98.5	47.7
LnGrp LOS	B		E	A	F	D
Approach Vol, veh/h	724	A		973	824	
Approach Delay, s/veh	16.8			21.9	79.1	
Approach LOS	B			C	E	

Timer - Assigned Phs	1	2				6	8
Phs Duration (G+Y+Rc), s	30.4	91.6				122.0	28.0
Change Period (Y+Rc), s	6.4	6.4				6.4	5.3
Max Green Setting (Gmax), s	43.6	65.6				115.6	22.7
Max Q Clear Time (g_c+I1), s	23.2	13.7				12.0	24.7
Green Ext Time (p_c), s	0.9	12.1				13.6	0.0

Intersection Summary	
HCM 6th Ctrl Delay	39.1
HCM 6th LOS	D

Notes

User approved pedestrian interval to be less than phase max green.

Unsignalized Delay for [EBR] is excluded from calculations of the approach delay and intersection delay.

Movement	EBL	EBT	EBR	WBL	WBT	WBR	NBL	NBT	NBR	SBL	SBT	SBR
Lane Configurations												
Traffic Volume (vph)	135	764	0	0	994	491	0	0	384	0	0	635
Future Volume (vph)	135	764	0	0	994	491	0	0	384	0	0	635
Ideal Flow (vphpl)	1900	1900	1900	1900	1900	1900	1900	1900	1900	1900	1900	1900
Total Lost time (s)	5.0	5.0			5.0	5.0			4.0			5.0
Lane Util. Factor	1.00	0.95			0.95	1.00			1.00			1.00
Frpb, ped/bikes	1.00	1.00			1.00	1.00			1.00			1.00
Flpb, ped/bikes	1.00	1.00			1.00	1.00			1.00			1.00
Frt	1.00	1.00			1.00	0.85			0.86			0.86
Flt Protected	0.95	1.00			1.00	1.00			1.00			1.00
Satd. Flow (prot)	1687	3374			3374	1509			1508			1596
Flt Permitted	0.95	1.00			1.00	1.00			1.00			1.00
Satd. Flow (perm)	1687	3374			3374	1509			1508			1596
Peak-hour factor, PHF	0.96	0.96	0.96	0.96	0.96	0.96	0.96	0.96	0.96	0.96	0.96	0.96
Adj. Flow (vph)	141	796	0	0	1035	511	0	0	400	0	0	661
RTOR Reduction (vph)	0	0	0	0	0	0	0	0	0	0	0	36
Lane Group Flow (vph)	141	796	0	0	1035	511	0	0	400	0	0	625
Confl. Peds. (#/hr)	4					4						
Heavy Vehicles (%)	7%	7%	7%	7%	7%	7%	9%	9%	9%	3%	3%	3%
Turn Type	Prot	NA			NA	custom			Free			pt+ov
Protected Phases	1!	1 6 8			6	4 6 8!						1 8
Permitted Phases									Free			8 1
Actuated Green, G (s)	34.5	100.0			55.5	100.0			100.0			34.5
Effective Green, g (s)	34.5	100.0			55.5	100.0			100.0			34.5
Actuated g/C Ratio	0.34	1.00			0.56	1.00			1.00			0.34
Clearance Time (s)	5.0				5.0							
Vehicle Extension (s)	2.0				2.0							
Lane Grp Cap (vph)	582	3374			1872	1509			1508			550
v/s Ratio Prot	0.08	0.24			c0.31	0.34						c0.39
v/s Ratio Perm									0.27			
v/c Ratio	0.24	0.24			0.55	0.34			0.27			1.14
Uniform Delay, d1	23.4	0.0			14.3	0.0			0.0			32.8
Progression Factor	0.76	1.00			1.00	1.00			1.00			1.00
Incremental Delay, d2	0.8	0.0			1.2	0.0			0.4			81.8
Delay (s)	18.7	0.0			15.5	0.0			0.4			114.6
Level of Service	B	A			B	A			A			F
Approach Delay (s)		2.8			10.4			0.4			114.6	
Approach LOS		A			B			A			F	

Intersection Summary			
HCM 2000 Control Delay	26.7	HCM 2000 Level of Service	C
HCM 2000 Volume to Capacity ratio	0.80		
Actuated Cycle Length (s)	100.0	Sum of lost time (s)	13.0
Intersection Capacity Utilization	75.1%	ICU Level of Service	D
Analysis Period (min)	15		

! Phase conflict between lane groups.
c Critical Lane Group

Movement	EBL	EBT	EBR	WBL	WBT	WBR	NBL	NBT	NBR	SBL	SBT	SBR
Lane Configurations												
Traffic Volume (vph)	500	345	75	425	325	874	0	0	0	560	700	440
Future Volume (vph)	500	345	75	425	325	874	0	0	0	560	700	440
Ideal Flow (vphpl)	1900	1900	1900	1900	1900	1900	1900	1900	1900	1900	1900	1900
Total Lost time (s)	5.0	5.0		9.0	9.0	4.0				5.0	5.0	5.0
Lane Util. Factor	0.97	0.95		1.00	0.95	1.00				0.97	0.95	0.95
Frt	1.00	0.97		1.00	1.00	0.85				1.00	1.00	0.85
Flt Protected	0.95	1.00		0.95	1.00	1.00				0.95	1.00	1.00
Satd. Flow (prot)	3400	3410		1687	3374	1509				3273	1687	1434
Flt Permitted	0.95	1.00		0.95	1.00	1.00				0.95	1.00	1.00
Satd. Flow (perm)	3400	3410		1687	3374	1509				3273	1687	1434
Peak-hour factor, PHF	0.98	0.98	0.98	0.98	0.98	0.98	0.98	0.98	0.98	0.98	0.98	0.98
Adj. Flow (vph)	510	352	77	434	332	892	0	0	0	571	714	449
RTOR Reduction (vph)	0	19	0	0	0	6	0	0	0	0	0	0
Lane Group Flow (vph)	510	410	0	434	332	886	0	0	0	571	714	449
Heavy Vehicles (%)	3%	3%	3%	7%	7%	7%	0%	0%	0%	7%	7%	7%
Turn Type	Split	NA		Split	NA	custom				Split	NA	custom
Protected Phases	2	2		3	3	7				4	4	4 5
Permitted Phases						7						
Actuated Green, G (s)	18.0	18.0		28.4	28.4	73.0				34.6	34.6	57.6
Effective Green, g (s)	18.0	18.0		28.4	28.4	73.0				34.6	34.6	57.6
Actuated g/C Ratio	0.18	0.18		0.28	0.28	0.73				0.35	0.35	0.58
Clearance Time (s)	5.0	5.0		9.0	9.0	4.0				5.0	5.0	
Vehicle Extension (s)	4.0	4.0		3.0	3.0	3.0				3.0	3.0	
Lane Grp Cap (vph)	612	613		479	958	1101				1132	583	825
v/s Ratio Prot	c0.15	0.12		0.26	0.10	c0.59				0.17	c0.42	0.31
v/s Ratio Perm												
v/c Ratio	0.83	0.67		0.91	0.35	0.80				0.50	1.22	0.54
Uniform Delay, d1	39.6	38.2		34.5	28.4	8.8				25.9	32.7	13.1
Progression Factor	1.00	1.00		0.76	0.72	1.41				0.54	0.57	0.46
Incremental Delay, d2	12.6	5.7		15.8	0.2	3.2				0.2	111.5	0.5
Delay (s)	52.1	43.9		42.1	20.6	15.6				14.4	130.0	6.5
Level of Service	D	D		D	C	B				B	F	A
Approach Delay (s)		48.4			23.6			0.0			60.0	
Approach LOS		D			C			A			E	

Intersection Summary			
HCM 2000 Control Delay	43.5	HCM 2000 Level of Service	D
HCM 2000 Volume to Capacity ratio	1.05		
Actuated Cycle Length (s)	100.0	Sum of lost time (s)	19.0
Intersection Capacity Utilization	97.1%	ICU Level of Service	F
Analysis Period (min)	15		
c Critical Lane Group			

Movement	EBL	EBT	EBR	WBL	WBT	WBR	NBL	NBT	NBR	SBL	SBT	SBR
Lane Configurations												
Traffic Volume (veh/h)	185	260	155	799	195	205	95	600	684	180	741	95
Future Volume (veh/h)	185	260	155	799	195	205	95	600	684	180	741	95
Initial Q (Qb), veh	0	0	0	0	0	0	0	0	0	0	0	0
Ped-Bike Adj(A_pbT)	1.00		1.00	1.00		1.00	1.00		1.00	1.00		1.00
Parking Bus, Adj	1.00	1.00	1.00	1.00	1.00	1.00	1.00	1.00	1.00	1.00	1.00	1.00
Work Zone On Approach		No			No			No			No	
Adj Sat Flow, veh/h/ln	1856	1856	1856	1856	1856	1856	1841	1841	1841	1767	1767	1767
Adj Flow Rate, veh/h	153	321	0	754	299	0	98	619	0	186	764	0
Peak Hour Factor	0.97	0.97	0.97	0.97	0.97	0.97	0.97	0.97	0.97	0.97	0.97	0.97
Percent Heavy Veh, %	3	3	3	3	3	3	4	4	4	9	9	9
Cap, veh/h	258	542		972	510		126	905		335	1529	
Arrive On Green	0.15	0.15	0.00	0.09	0.09	0.00	0.02	0.06	0.00	0.20	0.32	0.00
Sat Flow, veh/h	1767	3711	1572	3534	1856	1572	1753	5025	1560	1682	4823	1497
Grp Volume(v), veh/h	153	321	0	754	299	0	98	619	0	186	764	0
Grp Sat Flow(s),veh/h/ln	1767	1856	1572	1767	1856	1572	1753	1675	1560	1682	1608	1497
Q Serve(g_s), s	8.1	8.1	0.0	20.9	15.5	0.0	5.6	12.1	0.0	10.0	12.9	0.0
Cycle Q Clear(g_c), s	8.1	8.1	0.0	20.9	15.5	0.0	5.6	12.1	0.0	10.0	12.9	0.0
Prop In Lane	1.00		1.00	1.00		1.00	1.00		1.00	1.00		1.00
Lane Grp Cap(c), veh/h	258	542		972	510		126	905		335	1529	
V/C Ratio(X)	0.59	0.59		0.78	0.59		0.78	0.68		0.56	0.50	
Avail Cap(c_a), veh/h	300	631		990	520		210	905		335	1529	
HCM Platoon Ratio	1.00	1.00	1.00	0.33	0.33	0.33	0.33	0.33	0.33	1.00	1.00	1.00
Upstream Filter(I)	1.00	1.00	0.00	0.87	0.87	0.00	0.47	0.47	0.00	1.00	1.00	0.00
Uniform Delay (d), s/veh	39.9	39.9	0.0	42.4	40.0	0.0	48.0	44.2	0.0	36.1	27.7	0.0
Incr Delay (d2), s/veh	9.7	4.7	0.0	4.8	3.5	0.0	6.8	2.0	0.0	2.6	1.2	0.0
Initial Q Delay(d3),s/veh	0.0	0.0	0.0	0.0	0.0	0.0	0.0	0.0	0.0	0.0	0.0	0.0
%ile BackOfQ(50%),veh/ln	4.1	4.0	0.0	10.5	8.1	0.0	2.7	5.6	0.0	4.3	5.0	0.0
Unsig. Movement Delay, s/veh												
LnGrp Delay(d),s/veh	49.6	44.6	0.0	47.2	43.5	0.0	54.8	46.2	0.0	38.6	28.9	0.0
LnGrp LOS	D	D		D	D		D	D		D	C	
Approach Vol, veh/h		474	A		1053	A		717	A		950	A
Approach Delay, s/veh		46.2			46.2			47.4			30.8	
Approach LOS		D			D			D			C	

Timer - Assigned Phs		2	3	4		6	7	8				
Phs Duration (G+Y+Rc), s		32.5	11.2	36.7		19.6	24.9	23.0				
Change Period (Y+Rc), s		5.0	4.0	5.0		5.0	5.0	* 5				
Max Green Setting (Gmax), s		28.0	12.0	24.0		17.0	18.0	* 18				
Max Q Clear Time (g_c+I1), s		22.9	7.6	14.9		10.1	12.0	14.1				
Green Ext Time (p_c), s		4.6	0.1	6.1		4.4	0.4	2.2				

Intersection Summary	
HCM 6th Ctrl Delay	41.9
HCM 6th LOS	D

Notes

User approved pedestrian interval to be less than phase max green.

User approved volume balancing among the lanes for turning movement.

* HCM 6th computational engine requires equal clearance times for the phases crossing the barrier.

Movement	EBL	EBT	EBR	WBL	WBT	WBR	NBL	NBT	NBR	SBL	SBT	SBR
Lane Configurations												
Traffic Volume (veh/h)	80	1049	5	5	1084	5	15	0	5	10	0	95
Future Volume (veh/h)	80	1049	5	5	1084	5	15	0	5	10	0	95
Initial Q (Qb), veh	0	0	0	0	0	0	0	0	0	0	0	0
Ped-Bike Adj(A_pbT)	1.00		1.00	1.00		1.00	1.00		1.00	1.00		1.00
Parking Bus, Adj	1.00	1.00	1.00	1.00	1.00	1.00	1.00	1.00	1.00	1.00	1.00	1.00
Work Zone On Approach		No			No			No			No	
Adj Sat Flow, veh/h/ln	1841	1841	1841	1870	1870	1870	1900	1900	1900	1826	1826	1826
Adj Flow Rate, veh/h	82	1081	5	5	1118	5	15	0	5	10	0	98
Peak Hour Factor	0.97	0.97	0.97	0.97	0.97	0.97	0.97	0.97	0.97	0.97	0.97	0.97
Percent Heavy Veh, %	4	4	4	2	2	2	0	0	0	5	5	5
Cap, veh/h	105	2547	12	9	2391	11	169	0	122	182	0	129
Arrive On Green	0.08	0.95	0.95	0.01	0.66	0.66	0.08	0.00	0.08	0.08	0.00	0.08
Sat Flow, veh/h	1753	3570	17	1781	3628	16	1162	0	1465	1326	0	1547
Grp Volume(v), veh/h	82	530	556	5	548	575	15	0	5	10	0	98
Grp Sat Flow(s),veh/h/ln	1753	1749	1838	1781	1777	1867	1162	0	1465	1326	0	1547
Q Serve(g_s), s	4.6	2.6	2.6	0.3	15.2	15.2	1.1	0.0	0.3	0.7	0.0	6.2
Cycle Q Clear(g_c), s	4.6	2.6	2.6	0.3	15.2	15.2	2.1	0.0	0.3	1.0	0.0	6.2
Prop In Lane	1.00		0.01	1.00		0.01	1.00		1.00	1.00		1.00
Lane Grp Cap(c), veh/h	105	1248	1311	9	1171	1230	169	0	122	182	0	129
V/C Ratio(X)	0.78	0.42	0.42	0.54	0.47	0.47	0.09	0.00	0.04	0.05	0.00	0.76
Avail Cap(c_a), veh/h	200	1248	1311	78	1171	1230	341	0	314	362	0	331
HCM Platoon Ratio	1.33	1.33	1.33	1.00	1.00	1.00	1.00	1.00	1.00	1.00	1.00	1.00
Upstream Filter(I)	0.55	0.55	0.55	1.00	1.00	1.00	1.00	0.00	1.00	1.00	0.00	1.00
Uniform Delay (d), s/veh	45.4	0.8	0.8	49.6	8.4	8.4	43.4	0.0	42.2	42.6	0.0	44.9
Incr Delay (d2), s/veh	6.8	0.6	0.6	41.4	1.3	1.3	0.3	0.0	0.2	0.2	0.0	12.3
Initial Q Delay(d3),s/veh	0.0	0.0	0.0	0.0	0.0	0.0	0.0	0.0	0.0	0.0	0.0	0.0
%ile BackOfQ(50%),veh/ln	2.1	0.7	0.7	0.2	5.5	5.7	0.4	0.0	0.1	0.2	0.0	2.8
Unsig. Movement Delay, s/veh												
LnGrp Delay(d),s/veh	52.2	1.4	1.4	91.0	9.8	9.7	43.7	0.0	42.4	42.8	0.0	57.1
LnGrp LOS	D	A	A	F	A	A	D	A	D	D	A	E
Approach Vol, veh/h		1168			1128			20			108	
Approach Delay, s/veh		4.9			10.1			43.4			55.8	
Approach LOS		A			B			D			E	

Timer - Assigned Phs	1	2		4	5	6		8
Phs Duration (G+Y+Rc), s	12.6	72.5		14.9	7.1	78.0		14.9
Change Period (Y+Rc), s	6.6	6.6		6.6	6.6	6.6		6.6
Max Green Setting (Gmax), s	11.4	47.4		21.4	4.4	54.4		21.4
Max Q Clear Time (g_c+I1), s	6.6	17.2		4.1	2.3	4.6		8.2
Green Ext Time (p_c), s	0.1	28.5		0.0	0.0	11.8		0.4

Intersection Summary	
HCM 6th Ctrl Delay	9.9
HCM 6th LOS	A

Movement	EBL	EBT	EBR	WBL	WBT	WBR	NBL	NBT	NBR	SBL	SBT	SBR
Lane Configurations												
Traffic Volume (veh/h)	10	974	75	35	979	5	85	10	35	5	5	25
Future Volume (veh/h)	10	974	75	35	979	5	85	10	35	5	5	25
Initial Q (Qb), veh	0	0	0	0	0	0	0	0	0	0	0	0
Ped-Bike Adj(A_pbT)	1.00		1.00	1.00		1.00	1.00		1.00	1.00		0.99
Parking Bus, Adj	1.00	1.00	1.00	1.00	1.00	1.00	1.00	1.00	1.00	1.00	1.00	1.00
Work Zone On Approach		No			No			No			No	
Adj Sat Flow, veh/h/ln	1841	1841	1841	1811	1811	1811	1841	1841	1841	1900	1900	1900
Adj Flow Rate, veh/h	11	1036	80	37	1041	5	90	11	37	5	5	27
Peak Hour Factor	0.94	0.94	0.94	0.94	0.94	0.94	0.94	0.94	0.94	0.94	0.94	0.94
Percent Heavy Veh, %	4	4	4	6	6	6	4	4	4	0	0	0
Cap, veh/h	672	2209	171	55	1089	5	130	27	92	58	8	44
Arrive On Green	0.38	0.67	0.67	0.02	0.21	0.21	0.07	0.07	0.07	0.03	0.03	0.03
Sat Flow, veh/h	1753	3290	254	1725	3512	17	1753	369	1242	1810	256	1385
Grp Volume(v), veh/h	11	551	565	37	510	536	90	0	48	5	0	32
Grp Sat Flow(s),veh/h/ln	1753	1749	1795	1725	1721	1808	1753	0	1611	1810	0	1641
Q Serve(g_s), s	0.4	15.1	15.1	2.1	29.3	29.3	5.0	0.0	2.8	0.3	0.0	1.9
Cycle Q Clear(g_c), s	0.4	15.1	15.1	2.1	29.3	29.3	5.0	0.0	2.8	0.3	0.0	1.9
Prop In Lane	1.00		0.14	1.00		0.01	1.00		0.77	1.00		0.84
Lane Grp Cap(c), veh/h	672	1174	1205	55	533	560	130	0	120	58	0	53
V/C Ratio(X)	0.02	0.47	0.47	0.67	0.96	0.96	0.69	0.00	0.40	0.09	0.00	0.61
Avail Cap(c_a), veh/h	672	1174	1205	241	533	560	316	0	290	326	0	295
HCM Platoon Ratio	1.00	1.00	1.00	0.67	0.67	0.67	1.00	1.00	1.00	1.00	1.00	1.00
Upstream Filter(I)	1.00	1.00	1.00	0.93	0.93	0.93	1.00	0.00	1.00	1.00	0.00	1.00
Uniform Delay (d), s/veh	19.1	7.9	7.9	48.4	38.9	38.9	45.2	0.0	44.2	47.0	0.0	47.8
Incr Delay (d2), s/veh	0.0	1.3	1.3	12.2	28.2	27.3	8.9	0.0	3.1	0.9	0.0	15.0
Initial Q Delay(d3),s/veh	0.0	0.0	0.0	0.0	0.0	0.0	0.0	0.0	0.0	0.0	0.0	0.0
%ile BackOfQ(50%),veh/ln	0.2	5.3	5.4	1.1	16.9	17.6	2.5	0.0	1.2	0.1	0.0	1.0
Unsig. Movement Delay, s/veh												
LnGrp Delay(d),s/veh	19.1	9.2	9.2	60.5	67.1	66.3	54.1	0.0	47.2	47.9	0.0	62.8
LnGrp LOS	B	A	A	E	E	E	D	A	D	D	A	E
Approach Vol, veh/h		1127			1083			138			37	
Approach Delay, s/veh		9.3			66.5			51.7			60.8	
Approach LOS		A			E			D			E	

Timer - Assigned Phs	1	2		4	5	6		8
Phs Duration (G+Y+Rc), s	43.4	36.0		12.4	7.2	72.1		8.2
Change Period (Y+Rc), s	5.0	* 5		5.0	4.0	5.0		5.0
Max Green Setting (Gmax), s	14.0	* 31		18.0	14.0	31.0		18.0
Max Q Clear Time (g_c+I1), s	2.4	31.3		7.0	4.1	17.1		3.9
Green Ext Time (p_c), s	0.0	0.0		0.4	0.0	11.5		0.1

Intersection Summary	
HCM 6th Ctrl Delay	38.5
HCM 6th LOS	D

Notes

User approved pedestrian interval to be less than phase max green.

* HCM 6th computational engine requires equal clearance times for the phases crossing the barrier.

Movement	EBL	EBT	EBR	WBL	WBT	WBR	NBL	NBT	NBR	SBL	SBT	SBR
Lane Configurations												
Traffic Volume (veh/h)	25	960	29	25	940	45	44	5	25	60	5	30
Future Volume (veh/h)	25	960	29	25	940	45	44	5	25	60	5	30
Initial Q (Qb), veh	0	0	0	0	0	0	0	0	0	0	0	0
Ped-Bike Adj(A_pbT)	1.00		1.00	1.00		1.00	1.00		1.00	1.00		1.00
Parking Bus, Adj	1.00	1.00	1.00	1.00	1.00	1.00	1.00	1.00	1.00	1.00	1.00	1.00
Work Zone On Approach		No			No			No			No	
Adj Sat Flow, veh/h/ln	1856	1856	1856	1870	1870	1870	1470	1470	1470	1826	1826	1826
Adj Flow Rate, veh/h	26	1000	30	26	979	47	46	5	26	62	5	31
Peak Hour Factor	0.96	0.96	0.96	0.96	0.96	0.96	0.96	0.96	0.96	0.96	0.96	0.96
Percent Heavy Veh, %	3	3	3	2	2	2	29	29	29	5	5	5
Cap, veh/h	45	2489	75	46	2458	118	107	18	34	209	14	228
Arrive On Green	0.05	1.00	1.00	0.03	0.71	0.71	0.12	0.12	0.12	0.12	0.12	0.12
Sat Flow, veh/h	1767	3495	105	1781	3452	166	404	145	280	1141	116	1544
Grp Volume(v), veh/h	26	504	526	26	504	522	77	0	0	67	0	31
Grp Sat Flow(s),veh/h/ln	1767	1763	1837	1781	1777	1840	829	0	0	1257	0	1544
Q Serve(g_s), s	1.4	0.0	0.0	1.4	11.4	11.4	4.9	0.0	0.0	0.0	0.0	1.7
Cycle Q Clear(g_c), s	1.4	0.0	0.0	1.4	11.4	11.4	9.9	0.0	0.0	5.0	0.0	1.7
Prop In Lane	1.00		0.06	1.00		0.09	0.60		0.34	0.93		1.00
Lane Grp Cap(c), veh/h	45	1255	1308	46	1265	1311	159	0	0	223	0	228
V/C Ratio(X)	0.57	0.40	0.40	0.57	0.40	0.40	0.49	0.00	0.00	0.30	0.00	0.14
Avail Cap(c_a), veh/h	194	1255	1308	338	1265	1311	260	0	0	343	0	364
HCM Platoon Ratio	2.00	2.00	2.00	1.00	1.00	1.00	1.00	1.00	1.00	1.00	1.00	1.00
Upstream Filter(I)	0.86	0.86	0.86	1.00	1.00	1.00	1.00	0.00	0.00	1.00	0.00	1.00
Uniform Delay (d), s/veh	46.9	0.0	0.0	48.2	5.8	5.8	43.7	0.0	0.0	40.7	0.0	37.1
Incr Delay (d2), s/veh	9.4	0.8	0.8	10.6	0.9	0.9	2.3	0.0	0.0	0.7	0.0	0.3
Initial Q Delay(d3),s/veh	0.0	0.0	0.0	0.0	0.0	0.0	0.0	0.0	0.0	0.0	0.0	0.0
%ile BackOfQ(50%),veh/ln	0.7	0.3	0.3	0.8	3.8	3.9	2.0	0.0	0.0	1.6	0.0	0.7
Unsig. Movement Delay, s/veh												
LnGrp Delay(d),s/veh	56.3	0.8	0.8	58.7	6.7	6.7	46.0	0.0	0.0	41.5	0.0	37.3
LnGrp LOS	E	A	A	E	A	A	D	A	A	D	A	D
Approach Vol, veh/h		1056			1052			77			98	
Approach Delay, s/veh		2.2			8.0			46.0			40.1	
Approach LOS		A			A			D			D	

Timer - Assigned Phs	1	2		4	5	6		8
Phs Duration (G+Y+Rc), s	6.6	76.2		17.2	6.6	76.2		17.2
Change Period (Y+Rc), s	4.0	5.0		5.0	4.0	5.0		5.0
Max Green Setting (Gmax), s	11.0	54.0		21.0	19.0	46.0		21.0
Max Q Clear Time (g_c+I1), s	3.4	13.4		7.0	3.4	2.0		11.9
Green Ext Time (p_c), s	0.0	27.9		0.2	0.0	32.8		0.1

Intersection Summary	
HCM 6th Ctrl Delay	8.0
HCM 6th LOS	A

Notes

User approved pedestrian interval to be less than phase max green.

Movement	EBL	EBT	EBR	WBL	WBT	WBR	NBL	NBT	NBR	SBL	SBT	SBR
Lane Configurations												
Traffic Volume (veh/h)	15	977	10	10	924	10	10	0	10	15	0	10
Future Volume (veh/h)	15	977	10	10	924	10	10	0	10	15	0	10
Initial Q (Qb), veh	0	0	0	0	0	0	0	0	0	0	0	0
Ped-Bike Adj(A_pbT)	1.00		1.00	1.00		1.00	1.00		1.00	1.00		1.00
Parking Bus, Adj	1.00	1.00	1.00	1.00	1.00	1.00	1.00	1.00	1.00	1.00	1.00	1.00
Work Zone On Approach		No			No			No			No	
Adj Sat Flow, veh/h/ln	1781	1781	1781	1796	1796	1796	1781	1781	1781	1826	1826	1826
Adj Flow Rate, veh/h	16	1062	11	11	1004	11	11	0	11	16	0	11
Peak Hour Factor	0.92	0.92	0.92	0.92	0.92	0.92	0.92	0.92	0.92	0.92	0.92	0.92
Percent Heavy Veh, %	8	8	8	7	7	7	8	8	8	5	5	5
Cap, veh/h	34	1957	873	24	1953	871	148	0	64	148	0	65
Arrive On Green	0.02	0.58	0.58	0.01	0.57	0.57	0.04	0.00	0.04	0.04	0.00	0.04
Sat Flow, veh/h	1697	3385	1510	1711	3413	1522	0	0	1510	0	0	1547
Grp Volume(v), veh/h	16	1062	11	11	1004	11	11	0	11	16	0	11
Grp Sat Flow(s),veh/h/ln	1697	1692	1510	1711	1706	1522	0	0	1510	0	0	1547
Q Serve(g_s), s	0.5	9.4	0.2	0.3	8.7	0.2	0.0	0.0	0.3	0.0	0.0	0.3
Cycle Q Clear(g_c), s	0.5	9.4	0.2	0.3	8.7	0.2	2.1	0.0	0.3	2.1	0.0	0.3
Prop In Lane	1.00		1.00	1.00		1.00	1.00		1.00	1.00		1.00
Lane Grp Cap(c), veh/h	34	1957	873	24	1953	871	148	0	64	148	0	65
V/C Ratio(X)	0.47	0.54	0.01	0.45	0.51	0.01	0.07	0.00	0.17	0.11	0.00	0.17
Avail Cap(c_a), veh/h	174	3002	1339	176	3027	1350	942	0	961	596	0	572
HCM Platoon Ratio	1.00	1.00	1.00	1.00	1.00	1.00	1.00	1.00	1.00	1.00	1.00	1.00
Upstream Filter(I)	1.00	1.00	1.00	1.00	1.00	1.00	1.00	0.00	1.00	1.00	0.00	1.00
Uniform Delay (d), s/veh	23.6	6.3	4.4	23.8	6.3	4.5	24.4	0.0	22.5	24.4	0.0	22.5
Incr Delay (d2), s/veh	9.8	0.5	0.0	12.6	0.4	0.0	0.2	0.0	1.3	0.7	0.0	2.6
Initial Q Delay(d3),s/veh	0.0	0.0	0.0	0.0	0.0	0.0	0.0	0.0	0.0	0.0	0.0	0.0
%ile BackOfQ(50%),veh/ln	0.3	2.3	0.0	0.2	2.2	0.0	0.1	0.0	0.1	0.2	0.0	0.2
Unsig. Movement Delay, s/veh												
LnGrp Delay(d),s/veh	33.5	6.8	4.4	36.4	6.8	4.5	24.6	0.0	23.8	25.0	0.0	25.1
LnGrp LOS	C	A	A	D	A	A	C	A	C	C	A	C
Approach Vol, veh/h		1089			1026			22			27	
Approach Delay, s/veh		7.2			7.1			24.2			25.0	
Approach LOS		A			A			C			C	

Timer - Assigned Phs	1	2		4	5	6		8
Phs Duration (G+Y+Rc), s	7.4	34.3		7.1	7.1	34.6		7.1
Change Period (Y+Rc), s	6.4	6.4		5.0	6.4	6.4		5.0
Max Green Setting (Gmax), s	5.0	43.2		18.0	5.0	43.2		31.0
Max Q Clear Time (g_c+I1), s	2.5	10.7		4.1	2.3	11.4		4.1
Green Ext Time (p_c), s	0.0	15.9		0.1	0.0	16.8		0.0

Intersection Summary	
HCM 6th Ctrl Delay	7.5
HCM 6th LOS	A

Intersection	
Int Delay, s/veh	2.1

Movement	EBL	EBT	WBT	WBR	SBL	SBR
Lane Configurations						
Traffic Vol, veh/h	16	125	210	5	14	58
Future Vol, veh/h	16	125	210	5	14	58
Conflicting Peds, #/hr	0	0	0	0	0	0
Sign Control	Free	Free	Free	Free	Stop	Stop
RT Channelized	-	None	-	None	-	None
Storage Length	450	-	-	-	0	-
Veh in Median Storage, #	-	0	0	-	0	-
Grade, %	-	0	0	-	0	-
Peak Hour Factor	82	82	82	82	82	82
Heavy Vehicles, %	8	8	2	2	15	15
Mvmt Flow	20	152	256	6	17	71

Major/Minor	Major1		Major2		Minor2	
Conflicting Flow All	262	0	-	0	451	259
Stage 1	-	-	-	-	259	-
Stage 2	-	-	-	-	192	-
Critical Hdwy	4.18	-	-	-	6.55	6.35
Critical Hdwy Stg 1	-	-	-	-	5.55	-
Critical Hdwy Stg 2	-	-	-	-	5.55	-
Follow-up Hdwy	2.272	-	-	-	3.635	3.435
Pot Cap-1 Maneuver	1268	-	-	-	543	749
Stage 1	-	-	-	-	755	-
Stage 2	-	-	-	-	810	-
Platoon blocked, %		-	-	-		
Mov Cap-1 Maneuver	1268	-	-	-	534	749
Mov Cap-2 Maneuver	-	-	-	-	534	-
Stage 1	-	-	-	-	743	-
Stage 2	-	-	-	-	810	-

Approach	EB	WB	SB
HCM Control Delay, s	0.9	0	10.9
HCM LOS			B

Minor Lane/Major Mvmt	EBL	EBT	WBT	WBR	SBLn1
Capacity (veh/h)	1268	-	-	-	695
HCM Lane V/C Ratio	0.015	-	-	-	0.126
HCM Control Delay (s)	7.9	-	-	-	10.9
HCM Lane LOS	A	-	-	-	B
HCM 95th %tile Q(veh)	0	-	-	-	0.4

Intersection	
Int Delay, s/veh	3

Movement	EBL	EBT	EBR	WBL	WBT	WBR	NBL	NBT	NBR	SBL	SBT	SBR
Lane Configurations												
Traffic Vol, veh/h	5	126	95	95	178	5	30	0	10	5	5	10
Future Vol, veh/h	5	126	95	95	178	5	30	0	10	5	5	10
Conflicting Peds, #/hr	0	0	0	0	0	0	0	0	0	0	0	0
Sign Control	Free	Free	Free	Free	Free	Free	Stop	Stop	Stop	Stop	Stop	Stop
RT Channelized	-	-	None	-	-	None	-	-	None	-	-	None
Storage Length	-	-	-	-	-	-	-	-	-	-	-	-
Veh in Median Storage, #	-	0	-	-	0	-	-	0	-	-	0	-
Grade, %	-	0	-	-	0	-	-	0	-	-	0	-
Peak Hour Factor	89	89	89	89	89	89	89	89	89	89	89	89
Heavy Vehicles, %	9	9	9	7	7	7	0	0	0	53	53	53
Mvmt Flow	6	142	107	107	200	6	34	0	11	6	6	11

Major/Minor	Major1			Major2			Minor1			Minor2		
Conflicting Flow All	206	0	0	249	0	0	634	628	125	500	678	203
Stage 1	-	-	-	-	-	-	208	208	-	417	417	-
Stage 2	-	-	-	-	-	-	426	420	-	83	261	-
Critical Hdwy	4.235	-	-	4.205	-	-	7.3	6.5	6.9	8.095	7.295	6.995
Critical Hdwy Stg 1	-	-	-	-	-	-	6.5	5.5	-	6.895	6.295	-
Critical Hdwy Stg 2	-	-	-	-	-	-	6.1	5.5	-	7.295	6.295	-
Follow-up Hdwy	2.2855	-	-	2.2665	-	-	3.5	4	3.3	4.0035	4.5035	3.8035
Pot Cap-1 Maneuver	1319	-	-	1283	-	-	381	402	909	381	300	709
Stage 1	-	-	-	-	-	-	780	734	-	506	495	-
Stage 2	-	-	-	-	-	-	610	593	-	796	594	-
Platoon blocked, %		-	-		-	-						
Mov Cap-1 Maneuver	1319	-	-	1283	-	-	341	362	909	348	270	709
Mov Cap-2 Maneuver	-	-	-	-	-	-	341	362	-	348	270	-
Stage 1	-	-	-	-	-	-	776	730	-	503	448	-
Stage 2	-	-	-	-	-	-	537	537	-	782	591	-

Approach	EB	WB	NB	SB
HCM Control Delay, s	0.2	2.8	15	13.9
HCM LOS			C	B

Minor Lane/Major Mvmt	NBLn1	EBL	EBT	EBR	WBL	WBT	WBR	SBLn1
Capacity (veh/h)	404	1319	-	-	1283	-	-	426
HCM Lane V/C Ratio	0.111	0.004	-	-	0.083	-	-	0.053
HCM Control Delay (s)	15	7.7	0	-	8.1	0	-	13.9
HCM Lane LOS	C	A	A	-	A	A	-	B
HCM 95th %tile Q(veh)	0.4	0	-	-	0.3	-	-	0.2

Movement	WBL	WBR	NBT	NBR	SBL	SBT
Lane Configurations						
Traffic Volume (veh/h)	92	116	450	63	178	1250
Future Volume (veh/h)	92	116	450	63	178	1250
Initial Q (Qb), veh	0	0	0	0	0	0
Ped-Bike Adj(A_pbT)	1.00	1.00		1.00	1.00	
Parking Bus, Adj	1.00	1.00	1.00	1.00	1.00	1.00
Work Zone On Approach	No		No			No
Adj Sat Flow, veh/h/ln	1781	1781	1826	1826	1885	1885
Adj Flow Rate, veh/h	99	125	484	68	191	1344
Peak Hour Factor	0.93	0.93	0.93	0.93	0.93	0.93
Percent Heavy Veh, %	8	8	5	5	1	1
Cap, veh/h	109	137	1015	143	565	1391
Arrive On Green	0.16	0.16	0.65	0.65	0.05	0.74
Sat Flow, veh/h	699	882	1566	220	1795	1885
Grp Volume(v), veh/h	225	0	0	552	191	1344
Grp Sat Flow(s),veh/h/ln	1588	0	0	1786	1795	1885
Q Serve(g_s), s	18.9	0.0	0.0	21.3	4.6	88.1
Cycle Q Clear(g_c), s	18.9	0.0	0.0	21.3	4.6	88.1
Prop In Lane	0.44	0.56		0.12	1.00	
Lane Grp Cap(c), veh/h	247	0	0	1158	565	1391
V/C Ratio(X)	0.91	0.00	0.00	0.48	0.34	0.97
Avail Cap(c_a), veh/h	281	0	0	1189	568	1413
HCM Platoon Ratio	1.00	1.00	1.00	1.00	1.00	1.00
Upstream Filter(I)	1.00	0.00	0.00	1.00	1.00	1.00
Uniform Delay (d), s/veh	56.3	0.0	0.0	12.1	8.9	16.2
Incr Delay (d2), s/veh	29.4	0.0	0.0	0.4	0.5	16.5
Initial Q Delay(d3),s/veh	0.0	0.0	0.0	0.0	0.0	0.0
%ile BackOfQ(50%),veh/ln	9.6	0.0	0.0	8.4	1.8	39.0
Unsig. Movement Delay, s/veh						
LnGrp Delay(d),s/veh	85.7	0.0	0.0	12.6	9.4	32.7
LnGrp LOS	F	A	A	B	A	C
Approach Vol, veh/h	225		552			1535
Approach Delay, s/veh	85.7		12.6			29.8
Approach LOS	F		B			C

Timer - Assigned Phs	1	2				6	8
Phs Duration (G+Y+Rc), s	12.2	96.0				108.1	27.4
Change Period (Y+Rc), s	5.5	* 8.1				* 8.1	6.3
Max Green Setting (Gmax), s	6.9	* 90				* 1E2	24.0
Max Q Clear Time (g_c+I1), s	6.6	23.3				90.1	20.9
Green Ext Time (p_c), s	0.0	6.6				9.9	0.2

Intersection Summary	
HCM 6th Ctrl Delay	31.1
HCM 6th LOS	C

Notes

User approved pedestrian interval to be less than phase max green.

User approved volume balancing among the lanes for turning movement.

* HCM 6th computational engine requires equal clearance times for the phases crossing the barrier.

Movement	EBL	EBR	NBL	NBT	SBT	SBR
Lane Configurations						
Traffic Volume (vph)	70	275	90	339	1285	100
Future Volume (vph)	70	275	90	339	1285	100
Ideal Flow (vphpl)	1900	1900	1900	1900	1900	1900
Total Lost time (s)	5.0	5.0	6.5	6.5	6.5	6.5
Lane Util. Factor	1.00	1.00	1.00	1.00	1.00	1.00
Frt	1.00	0.85	1.00	1.00	1.00	0.85
Flt Protected	0.95	1.00	0.95	1.00	1.00	1.00
Satd. Flow (prot)	1752	1568	1787	1881	1881	1599
Flt Permitted	0.95	1.00	0.02	1.00	1.00	1.00
Satd. Flow (perm)	1752	1568	42	1881	1881	1599
Peak-hour factor, PHF	0.94	0.94	0.94	0.94	0.94	0.94
Adj. Flow (vph)	74	293	96	361	1367	106
RTOR Reduction (vph)	0	91	0	0	0	6
Lane Group Flow (vph)	74	202	96	361	1367	100
Heavy Vehicles (%)	3%	3%	1%	1%	1%	1%
Turn Type	custom	custom	pm+pt	NA	NA	Perm
Protected Phases	3	3	5	2	6	
Permitted Phases	4	4	2			6
Actuated Green, G (s)	34.9	34.9	193.6	193.6	171.4	171.4
Effective Green, g (s)	34.9	34.9	193.6	193.6	171.4	171.4
Actuated g/C Ratio	0.15	0.15	0.81	0.81	0.71	0.71
Clearance Time (s)	5.0	5.0	6.5	6.5	6.5	6.5
Vehicle Extension (s)	2.0	2.0	2.0	5.0	5.0	5.0
Lane Grp Cap (vph)	254	228	148	1517	1343	1141
v/s Ratio Prot	0.04	c0.13	c0.04	0.19	c0.73	
v/s Ratio Perm			0.48			0.06
v/c Ratio	0.29	0.88	0.65	0.24	1.02	0.09
Uniform Delay, d1	91.5	100.6	91.5	5.6	34.3	10.5
Progression Factor	1.00	1.00	0.96	1.60	1.00	1.00
Incremental Delay, d2	0.2	30.0	6.9	0.4	29.1	0.2
Delay (s)	91.7	130.5	94.6	9.2	63.4	10.6
Level of Service	F	F	F	A	E	B
Approach Delay (s)	122.7			27.2	59.6	
Approach LOS	F			C	E	

Intersection Summary			
HCM 2000 Control Delay	63.2	HCM 2000 Level of Service	E
HCM 2000 Volume to Capacity ratio	0.98		
Actuated Cycle Length (s)	240.0	Sum of lost time (s)	21.0
Intersection Capacity Utilization	94.2%	ICU Level of Service	F
Analysis Period (min)	15		
c Critical Lane Group			

Movement	EBL	EBR	NBL	NBT	SBT	SBR
Lane Configurations						
Traffic Volume (vph)	124	20	10	305	1315	265
Future Volume (vph)	124	20	10	305	1315	265
Ideal Flow (vphpl)	1900	1900	1900	1900	1900	1900
Total Lost time (s)	5.0	5.0	6.0	6.0	6.0	5.0
Lane Util. Factor	1.00	1.00	1.00	1.00	1.00	1.00
Frt	1.00	0.85	1.00	1.00	1.00	0.85
Flt Protected	0.95	1.00	0.95	1.00	1.00	1.00
Satd. Flow (prot)	1787	1599	1787	1881	1881	1599
Flt Permitted	0.95	1.00	0.04	1.00	1.00	1.00
Satd. Flow (perm)	1787	1599	80	1881	1881	1599
Peak-hour factor, PHF	0.91	0.91	0.91	0.91	0.91	0.91
Adj. Flow (vph)	136	22	11	335	1445	291
RTOR Reduction (vph)	0	20	0	0	0	23
Lane Group Flow (vph)	136	2	11	335	1445	269
Heavy Vehicles (%)	1%	1%	1%	1%	1%	1%
Turn Type	custom	custom	pm+pt	NA	NA	pm+ov
Protected Phases	3	3	5	2	6	3
Permitted Phases	4	4	2			6
Actuated Green, G (s)	13.5	13.5	95.5	95.5	88.5	102.0
Effective Green, g (s)	13.5	13.5	95.5	95.5	88.5	102.0
Actuated g/C Ratio	0.11	0.11	0.80	0.80	0.74	0.85
Clearance Time (s)	5.0	5.0	6.0	6.0	6.0	5.0
Vehicle Extension (s)	2.0	2.0	2.0	2.0	2.0	2.0
Lane Grp Cap (vph)	201	179	77	1496	1387	1359
v/s Ratio Prot	c0.08	0.00	0.00	c0.18	c0.77	0.02
v/s Ratio Perm			0.11			0.15
v/c Ratio	0.68	0.01	0.14	0.22	1.04	0.20
Uniform Delay, d1	51.2	47.3	36.8	3.0	15.8	1.6
Progression Factor	1.00	1.00	1.00	1.00	1.52	1.11
Incremental Delay, d2	6.9	0.0	0.3	0.3	27.0	0.0
Delay (s)	58.1	47.3	37.2	3.4	50.9	1.8
Level of Service	E	D	D	A	D	A
Approach Delay (s)	56.6			4.5	42.7	
Approach LOS	E			A	D	

Intersection Summary			
HCM 2000 Control Delay	37.7	HCM 2000 Level of Service	D
HCM 2000 Volume to Capacity ratio	1.02		
Actuated Cycle Length (s)	120.0	Sum of lost time (s)	20.0
Intersection Capacity Utilization	85.2%	ICU Level of Service	E
Analysis Period (min)	15		
c Critical Lane Group			

Intersection	
Int Delay, s/veh	20.8

Movement	EBL	EBT	EBR	WBL	WBT	WBR	NBL	NBT	NBR	SBL	SBT	SBR
Lane Configurations												
Traffic Vol, veh/h	0	0	0	210	0	20	20	285	0	0	550	730
Future Vol, veh/h	0	0	0	210	0	20	20	285	0	0	550	730
Conflicting Peds, #/hr	0	0	0	0	0	0	0	0	0	0	0	0
Sign Control	Stop	Stop	Stop	Stop	Stop	Stop	Free	Free	Free	Free	Free	Free
RT Channelized	-	-	None	-	-	None	-	-	None	-	-	None
Storage Length	-	-	-	-	-	500	175	-	-	-	-	375
Veh in Median Storage, #	-	1	-	-	0	-	-	0	-	-	0	-
Grade, %	-	0	-	-	0	-	-	0	-	-	0	-
Peak Hour Factor	98	98	98	98	98	98	98	98	98	98	98	98
Heavy Vehicles, %	0	0	0	1	1	1	1	1	1	1	1	1
Mvmt Flow	0	0	0	214	0	20	20	291	0	0	561	745

Major/Minor	Minor1		Major1			Major2			
Conflicting Flow All	1265	1637	291	1306	0	-	-	-	0
Stage 1	331	331	-	-	-	-	-	-	-
Stage 2	934	1306	-	-	-	-	-	-	-
Critical Hdwy	6.41	6.51	6.21	4.11	-	-	-	-	-
Critical Hdwy Stg 1	5.41	5.51	-	-	-	-	-	-	-
Critical Hdwy Stg 2	5.41	5.51	-	-	-	-	-	-	-
Follow-up Hdwy	3.509	4.009	3.309	2.209	-	-	-	-	-
Pot Cap-1 Maneuver	~ 188	101	751	533	-	0	0	-	-
Stage 1	730	647	-	-	-	0	0	-	-
Stage 2	384	231	-	-	-	0	0	-	-
Platoon blocked, %					-			-	-
Mov Cap-1 Maneuver	~ 181	0	751	533	-	-	-	-	-
Mov Cap-2 Maneuver	~ 181	0	-	-	-	-	-	-	-
Stage 1	702	0	-	-	-	-	-	-	-
Stage 2	384	0	-	-	-	-	-	-	-

Approach	WB	NB	SB
HCM Control Delay, s	162.7	0.8	0
HCM LOS	F		

Minor Lane/Major Mvmt	NBL	NBT	WBLn1	WBLn2	SBT	SBR
Capacity (veh/h)	533	-	181	751	-	-
HCM Lane V/C Ratio	0.038	-	1.184	0.027	-	-
HCM Control Delay (s)	12	-	177.2	9.9	-	-
HCM Lane LOS	B	-	F	A	-	-
HCM 95th %tile Q(veh)	0.1	-	11.3	0.1	-	-

Notes

~: Volume exceeds capacity $: Delay exceeds 300s +: Computation Not Defined *: All major volume in platoon

Movement	EBL	EBR	NBL	NBT	SBT	SBR
Lane Configurations						
Traffic Volume (veh/h)	165	30	35	140	730	30
Future Volume (veh/h)	165	30	35	140	730	30
Initial Q (Qb), veh	0	0	0	0	0	0
Ped-Bike Adj(A_pbT)	1.00	1.00	1.00			1.00
Parking Bus, Adj	1.00	1.00	1.00	1.00	1.00	1.00
Work Zone On Approach	No			No	No	
Adj Sat Flow, veh/h/ln	1885	1885	1885	1885	1900	1900
Adj Flow Rate, veh/h	172	31	36	146	760	31
Peak Hour Factor	0.96	0.96	0.96	0.96	0.96	0.96
Percent Heavy Veh, %	1	1	1	1	0	0
Cap, veh/h	248	221	175	650	1078	44
Arrive On Green	0.14	0.14	0.59	0.59	0.59	0.59
Sat Flow, veh/h	1795	1598	141	1093	1813	74
Grp Volume(v), veh/h	172	31	182	0	0	791
Grp Sat Flow(s),veh/h/ln	1795	1598	1234	0	0	1887
Q Serve(g_s), s	4.3	0.8	0.9	0.0	0.0	13.8
Cycle Q Clear(g_c), s	4.3	0.8	14.7	0.0	0.0	13.8
Prop In Lane	1.00	1.00	0.20			0.04
Lane Grp Cap(c), veh/h	248	221	826	0	0	1122
V/C Ratio(X)	0.69	0.14	0.22	0.00	0.00	0.70
Avail Cap(c_a), veh/h	1283	1142	826	0	0	1748
HCM Platoon Ratio	1.00	1.00	1.00	1.00	1.00	1.00
Upstream Filter(I)	1.00	1.00	1.00	0.00	0.00	1.00
Uniform Delay (d), s/veh	19.4	17.9	4.7	0.0	0.0	6.7
Incr Delay (d2), s/veh	3.5	0.3	0.3	0.0	0.0	1.7
Initial Q Delay(d3),s/veh	0.0	0.0	0.0	0.0	0.0	0.0
%ile BackOfQ(50%),veh/ln	1.8	0.3	0.6	0.0	0.0	3.9
Unsig. Movement Delay, s/veh						
LnGrp Delay(d),s/veh	22.9	18.2	5.0	0.0	0.0	8.4
LnGrp LOS	C	B	A	A	A	A
Approach Vol, veh/h	203			182	791	
Approach Delay, s/veh	22.1			5.0	8.4	
Approach LOS	C			A	A	

Timer - Assigned Phs		2		4		6
Phs Duration (G+Y+Rc), s		34.4		12.8		34.4
Change Period (Y+Rc), s		6.3		6.3		6.3
Max Green Setting (Gmax), s		23.7		33.7		43.7
Max Q Clear Time (g_c+I1), s		16.7		6.3		15.8
Green Ext Time (p_c), s		0.9		0.6		12.3

Intersection Summary	
HCM 6th Ctrl Delay	10.3
HCM 6th LOS	B

Movement	EBL	EBT	EBR	WBL	WBT	WBR	NBL	NBT	NBR	SBL	SBT	SBR
Lane Configurations												
Traffic Volume (veh/h)	95	5	15	10	5	5	45	536	5	5	1368	385
Future Volume (veh/h)	95	5	15	10	5	5	45	536	5	5	1368	385
Initial Q (Qb), veh	0	0	0	0	0	0	0	0	0	0	0	0
Ped-Bike Adj(A_pbT)	1.00		1.00	1.00		1.00	1.00		1.00	1.00		1.00
Parking Bus, Adj	1.00	1.00	1.00	1.00	1.00	1.00	1.00	1.00	1.00	1.00	1.00	1.00
Work Zone On Approach		No			No			No			No	
Adj Sat Flow, veh/h/ln	1885	1885	1885	1900	1900	1900	1826	1826	1826	1856	1856	1856
Adj Flow Rate, veh/h	101	5	16	11	5	5	48	570	5	5	1455	410
Peak Hour Factor	0.94	0.94	0.94	0.94	0.94	0.94	0.94	0.94	0.94	0.94	0.94	0.94
Percent Heavy Veh, %	1	1	1	0	0	0	5	5	5	3	3	3
Cap, veh/h	151	5	17	222	116	116	82	1316	12	558	1324	1122
Arrive On Green	0.09	0.09	0.09	0.01	0.13	0.13	0.02	0.73	0.73	0.00	0.71	0.71
Sat Flow, veh/h	1202	60	190	1810	872	872	1739	1807	16	1767	1856	1572
Grp Volume(v), veh/h	122	0	0	11	0	10	48	0	575	5	1455	410
Grp Sat Flow(s),veh/h/ln	1452	0	0	1810	0	1743	1739	0	1823	1767	1856	1572
Q Serve(g_s), s	12.1	0.0	0.0	0.8	0.0	0.7	1.1	0.0	18.1	0.1	102.9	14.6
Cycle Q Clear(g_c), s	12.1	0.0	0.0	0.8	0.0	0.7	1.1	0.0	18.1	0.1	102.9	14.6
Prop In Lane	0.83		0.13	1.00		0.50	1.00		0.01	1.00		1.00
Lane Grp Cap(c), veh/h	173	0	0	222	0	232	82	0	1327	558	1324	1122
V/C Ratio(X)	0.71	0.00	0.00	0.05	0.00	0.04	0.59	0.00	0.43	0.01	1.10	0.37
Avail Cap(c_a), veh/h	173	0	0	278	0	297	98	0	1327	600	1324	1122
HCM Platoon Ratio	1.00	1.00	1.00	1.00	1.00	1.00	1.00	1.00	1.00	1.00	1.00	1.00
Upstream Filter(I)	1.00	0.00	0.00	1.00	0.00	1.00	1.00	0.00	1.00	1.00	1.00	1.00
Uniform Delay (d), s/veh	65.6	0.0	0.0	57.6	0.0	54.5	42.0	0.0	7.8	6.7	20.7	8.0
Incr Delay (d2), s/veh	13.6	0.0	0.0	0.1	0.0	0.1	6.5	0.0	0.5	0.0	56.5	0.4
Initial Q Delay(d3),s/veh	0.0	0.0	0.0	0.0	0.0	0.0	0.0	0.0	0.0	0.0	0.0	0.0
%ile BackOfQ(50%),veh/ln	5.1	0.0	0.0	0.4	0.0	0.3	1.4	0.0	6.9	0.0	60.6	4.9
Unsig. Movement Delay, s/veh												
LnGrp Delay(d),s/veh	79.2	0.0	0.0	57.7	0.0	54.6	48.5	0.0	8.3	6.7	77.1	8.4
LnGrp LOS	E	A	A	E	A	D	D	A	A	A	F	A
Approach Vol, veh/h		122			21			623			1870	
Approach Delay, s/veh		79.2			56.3			11.4			61.9	
Approach LOS		E			E			B			E	

Timer - Assigned Phs	1	2	3	4	5	6		8
Phs Duration (G+Y+Rc), s	6.0	112.1	6.6	19.5	8.1	110.0		26.1
Change Period (Y+Rc), s	5.5	7.1	5.5	6.9	5.5	7.1		* 6.9
Max Green Setting (Gmax), s	4.0	102.9	5.5	12.6	4.0	102.9		* 25
Max Q Clear Time (g_c+I1), s	2.1	20.1	2.8	14.1	3.1	104.9		2.7
Green Ext Time (p_c), s	0.0	9.9	0.0	0.0	0.0	0.0		0.0

Intersection Summary	
HCM 6th Ctrl Delay	50.7
HCM 6th LOS	D

Notes

* HCM 6th computational engine requires equal clearance times for the phases crossing the barrier.

Movement	EBL	EBT	EBR	WBL	WBT	WBR	NBL	NBT	NBR	SBL	SBT	SBR
Lane Configurations												
Traffic Volume (veh/h)	470	1173	110	5	437	149	85	70	30	550	85	685
Future Volume (veh/h)	470	1173	110	5	437	149	85	70	30	550	85	685
Initial Q (Qb), veh	0	0	0	0	0	0	0	0	0	0	0	0
Ped-Bike Adj(A_pbT)	1.00		1.00	1.00		1.00	1.00		0.99	1.00		0.99
Parking Bus, Adj	1.00	1.00	1.00	1.00	1.00	1.00	1.00	1.00	1.00	1.00	1.00	1.00
Work Zone On Approach		No			No			No			No	
Adj Sat Flow, veh/h/ln	1870	1870	1870	1856	1856	1856	1900	1900	1900	1870	1870	1870
Adj Flow Rate, veh/h	490	1222	115	5	455	155	89	73	31	573	89	714
Peak Hour Factor	0.96	0.96	0.96	0.96	0.96	0.96	0.96	0.96	0.96	0.96	0.96	0.96
Percent Heavy Veh, %	2	2	2	3	3	3	0	0	0	2	2	2
Cap, veh/h	469	1447	645	11	529	235	109	254	108	479	768	1063
Arrive On Green	0.26	0.41	0.41	0.01	0.15	0.15	0.06	0.20	0.20	0.27	0.41	0.41
Sat Flow, veh/h	1781	3554	1583	1767	3526	1567	1810	1259	535	1781	1870	1573
Grp Volume(v), veh/h	490	1222	115	5	455	155	89	0	104	573	89	714
Grp Sat Flow(s),veh/h/ln	1781	1777	1583	1767	1763	1567	1810	0	1794	1781	1870	1573
Q Serve(g_s), s	47.0	55.4	8.3	0.5	22.5	16.6	8.7	0.0	8.8	48.0	5.3	48.4
Cycle Q Clear(g_c), s	47.0	55.4	8.3	0.5	22.5	16.6	8.7	0.0	8.8	48.0	5.3	48.4
Prop In Lane	1.00		1.00	1.00		1.00	1.00		0.30	1.00		1.00
Lane Grp Cap(c), veh/h	469	1447	645	11	529	235	109	0	362	479	768	1063
V/C Ratio(X)	1.04	0.84	0.18	0.46	0.86	0.66	0.82	0.00	0.29	1.20	0.12	0.67
Avail Cap(c_a), veh/h	469	1447	645	50	573	255	284	0	362	479	768	1063
HCM Platoon Ratio	1.00	1.00	1.00	1.00	1.00	1.00	1.00	1.00	1.00	1.00	1.00	1.00
Upstream Filter(I)	1.00	1.00	1.00	1.00	1.00	1.00	1.00	0.00	1.00	1.00	1.00	1.00
Uniform Delay (d), s/veh	65.8	47.8	33.8	88.4	74.0	71.5	82.9	0.0	60.4	65.3	32.6	17.4
Incr Delay (d2), s/veh	53.7	5.2	0.3	27.4	13.4	8.1	13.8	0.0	2.0	107.2	0.3	3.4
Initial Q Delay(d3),s/veh	0.0	0.0	0.0	0.0	0.0	0.0	0.0	0.0	0.0	0.0	0.0	0.0
%ile BackOfQ(50%),veh/ln	28.4	25.7	3.3	0.3	11.2	7.3	4.5	0.0	4.3	36.1	2.5	18.4
Unsig. Movement Delay, s/veh												
LnGrp Delay(d),s/veh	119.5	53.0	34.1	115.8	87.4	79.7	96.8	0.0	62.4	172.4	32.9	20.8
LnGrp LOS	F	D	C	F	F	E	F	A	E	F	C	C
Approach Vol, veh/h		1827			615			193			1376	
Approach Delay, s/veh		69.6			85.7			78.2			84.7	
Approach LOS		E			F			E			F	

Timer - Assigned Phs	1	2	3	4	5	6	7	8
Phs Duration (G+Y+Rc), s	6.1	78.4	15.7	78.3	52.0	32.5	53.0	41.0
Change Period (Y+Rc), s	5.0	5.7	5.0	5.0	5.0	* 5.7	5.0	5.0
Max Green Setting (Gmax), s	5.0	70.3	28.0	56.0	47.0	* 29	48.0	36.0
Max Q Clear Time (g_c+I1), s	2.5	57.4	10.7	50.4	49.0	24.5	50.0	10.8
Green Ext Time (p_c), s	0.0	10.1	0.2	1.9	0.0	2.2	0.0	0.5

Intersection Summary	
HCM 6th Ctrl Delay	77.7
HCM 6th LOS	E

Notes

User approved pedestrian interval to be less than phase max green.

* HCM 6th computational engine requires equal clearance times for the phases crossing the barrier.

Movement	EBT	EBR	WBL	WBT	NBL	NBR
Lane Configurations						
Traffic Volume (veh/h)	1363	1195	534	668	405	400
Future Volume (veh/h)	1363	1195	534	668	405	400
Initial Q (Qb), veh	0	0	0	0	0	0
Ped-Bike Adj(A_pbT)		1.00	1.00		1.00	1.00
Parking Bus, Adj	1.00	1.00	1.00	1.00	1.00	1.00
Work Zone On Approach	No			No	No	
Adj Sat Flow, veh/h/ln	1885	1885	1870	1870	1885	1885
Adj Flow Rate, veh/h	1405	0	551	689	418	412
Peak Hour Factor	0.97	0.97	0.97	0.97	0.97	0.97
Percent Heavy Veh, %	1	1	2	2	1	1
Cap, veh/h	2251		518	2739	527	706
Arrive On Green	0.44	0.00	0.29	0.77	0.15	0.15
Sat Flow, veh/h	5316	1598	1781	3647	3483	1598
Grp Volume(v), veh/h	1405	0	551	689	418	412
Grp Sat Flow(s),veh/h/ln	1716	1598	1781	1777	1742	1598
Q Serve(g_s), s	31.7	0.0	43.6	8.3	17.4	22.7
Cycle Q Clear(g_c), s	31.7	0.0	43.6	8.3	17.4	22.7
Prop In Lane		1.00	1.00		1.00	1.00
Lane Grp Cap(c), veh/h	2251		518	2739	527	706
V/C Ratio(X)	0.62		1.06	0.25	0.79	0.58
Avail Cap(c_a), veh/h	2251		518	2739	527	706
HCM Platoon Ratio	1.00	1.00	1.00	1.00	1.00	1.00
Upstream Filter(I)	1.00	0.00	0.82	0.82	1.00	1.00
Uniform Delay (d), s/veh	32.7	0.0	53.2	4.9	61.4	31.5
Incr Delay (d2), s/veh	1.3	0.0	54.1	0.2	8.5	1.5
Initial Q Delay(d3),s/veh	0.0	0.0	0.0	0.0	0.0	0.0
%ile BackOfQ(50%),veh/ln	13.5	0.0	27.2	2.9	8.3	11.6
Unsig. Movement Delay, s/veh						
LnGrp Delay(d),s/veh	34.0	0.0	107.3	5.1	69.9	33.0
LnGrp LOS	C		F	A	E	C
Approach Vol, veh/h	1405	A		1240	830	
Approach Delay, s/veh	34.0			50.5	51.6	
Approach LOS	C			D	D	

Timer - Assigned Phs	1	2				6	8
Phs Duration (G+Y+Rc), s	50.0	72.0				122.0	28.0
Change Period (Y+Rc), s	6.4	6.4				6.4	5.3
Max Green Setting (Gmax), s	43.6	65.6				115.6	22.7
Max Q Clear Time (g_c+I1), s	45.6	33.7				10.3	24.7
Green Ext Time (p_c), s	0.0	21.5				12.1	0.0

Intersection Summary	
HCM 6th Ctrl Delay	44.1
HCM 6th LOS	D

Notes

User approved pedestrian interval to be less than phase max green.

Unsignalized Delay for [EBR] is excluded from calculations of the approach delay and intersection delay.

Movement	EBL	EBT	EBR	WBL	WBT	WBR	NBL	NBT	NBR	SBL	SBT	SBR
Lane Configurations												
Traffic Volume (vph)	60	1624	0	0	963	335	0	0	669	0	0	695
Future Volume (vph)	60	1624	0	0	963	335	0	0	669	0	0	695
Ideal Flow (vphpl)	1900	1900	1900	1900	1900	1900	1900	1900	1900	1900	1900	1900
Total Lost time (s)	5.0	5.0			5.0	5.0			4.0			5.0
Lane Util. Factor	1.00	0.95			0.95	1.00			1.00			1.00
Frt	1.00	1.00			1.00	0.85			0.86			0.86
Flt Protected	0.95	1.00			1.00	1.00			1.00			1.00
Satd. Flow (prot)	1770	3539			3539	1583			1627			1611
Flt Permitted	0.95	1.00			1.00	1.00			1.00			1.00
Satd. Flow (perm)	1770	3539			3539	1583			1627			1611
Peak-hour factor, PHF	0.97	0.97	0.97	0.97	0.97	0.97	0.97	0.97	0.97	0.97	0.97	0.97
Adj. Flow (vph)	62	1674	0	0	993	345	0	0	690	0	0	716
RTOR Reduction (vph)	0	0	0	0	0	149	0	0	0	0	0	35
Lane Group Flow (vph)	62	1674	0	0	993	196	0	0	690	0	0	681
Heavy Vehicles (%)	2%	2%	2%	2%	2%	2%	1%	1%	1%	2%	2%	2%
Turn Type	Prot	NA			NA	custom			Free			Prot
Protected Phases	3	6 8			6	1						8
Permitted Phases						6			Free			8
Actuated Green, G (s)	63.1	140.0			66.9	66.9			140.0			63.1
Effective Green, g (s)	63.1	140.0			66.9	66.9			140.0			63.1
Actuated g/C Ratio	0.45	1.00			0.48	0.48			1.00			0.45
Clearance Time (s)	5.0				5.0	5.0						5.0
Vehicle Extension (s)	2.0				2.0	2.0						2.0
Lane Grp Cap (vph)	797	3539			1691	756			1627			726
v/s Ratio Prot	0.04	0.47			c0.28	0.12						c0.42
v/s Ratio Perm									0.42			
v/c Ratio	0.08	0.47			0.59	0.26			0.42			0.94
Uniform Delay, d1	21.9	0.0			26.5	21.8			0.0			36.6
Progression Factor	0.72	1.00			1.00	1.00			1.00			1.00
Incremental Delay, d2	0.0	0.0			1.5	0.8			0.8			19.4
Delay (s)	15.7	0.0			28.0	22.6			0.8			56.0
Level of Service	B	A			C	C			A			E
Approach Delay (s)		0.6			26.6			0.8			56.0	
Approach LOS		A			C			A			E	

Intersection Summary			
HCM 2000 Control Delay	17.3	HCM 2000 Level of Service	B
HCM 2000 Volume to Capacity ratio	0.78		
Actuated Cycle Length (s)	140.0	Sum of lost time (s)	13.0
Intersection Capacity Utilization	78.0%	ICU Level of Service	D
Analysis Period (min)	15		
c Critical Lane Group			

Movement	EBL	EBT	EBR	WBL	WBT	WBR	NBL	NBT	NBR	SBL	SBT	SBR
Lane Configurations												
Traffic Volume (vph)	710	545	75	369	260	1025	0	0	0	1174	1065	560
Future Volume (vph)	710	545	75	369	260	1025	0	0	0	1174	1065	560
Ideal Flow (vphpl)	1900	1900	1900	1900	1900	1900	1900	1900	1900	1900	1900	1900
Total Lost time (s)	5.0	5.0		9.0	9.0	4.0				5.0	5.0	5.0
Lane Util. Factor	0.97	0.95		1.00	0.95	1.00				0.97	0.95	0.95
Frt	1.00	0.98		1.00	1.00	0.85				1.00	1.00	0.85
Flt Protected	0.95	1.00		0.95	1.00	1.00				0.95	1.00	1.00
Satd. Flow (prot)	3467	3509		1770	3539	1583				3433	1770	1504
Flt Permitted	0.95	1.00		0.95	1.00	1.00				0.95	1.00	1.00
Satd. Flow (perm)	3467	3509		1770	3539	1583				3433	1770	1504
Peak-hour factor, PHF	0.98	0.98	0.98	0.98	0.98	0.98	0.98	0.98	0.98	0.98	0.98	0.98
Adj. Flow (vph)	724	556	77	377	265	1046	0	0	0	1198	1087	571
RTOR Reduction (vph)	0	7	0	0	0	4	0	0	0	0	0	0
Lane Group Flow (vph)	724	626	0	377	265	1042	0	0	0	1198	1087	571
Heavy Vehicles (%)	1%	1%	1%	2%	2%	2%	0%	0%	0%	2%	2%	2%
Turn Type	Split	NA		Split	NA	custom				Split	NA	custom
Protected Phases	2	2		3	3	7				4	4	4 5
Permitted Phases						7						
Actuated Green, G (s)	25.0	25.0		24.0	24.0	106.0				72.0	72.0	102.0
Effective Green, g (s)	25.0	25.0		24.0	24.0	106.0				72.0	72.0	102.0
Actuated g/C Ratio	0.18	0.18		0.17	0.17	0.76				0.51	0.51	0.73
Clearance Time (s)	5.0	5.0		9.0	9.0	4.0				5.0	5.0	
Vehicle Extension (s)	4.0	4.0		3.0	3.0	3.0				3.0	3.0	
Lane Grp Cap (vph)	619	626		303	606	1198				1765	910	1095
v/s Ratio Prot	c0.21	0.18		c0.21	0.07	0.66				0.35	c0.61	0.38
v/s Ratio Perm												
v/c Ratio	1.17	1.00		1.24	0.44	0.87				0.68	1.19	0.52
Uniform Delay, d1	57.5	57.5		58.0	52.0	12.1				25.4	34.0	8.3
Progression Factor	1.00	1.00		0.87	0.88	1.27				1.00	1.00	1.00
Incremental Delay, d2	92.8	35.6		127.4	0.3	6.1				2.1	98.3	0.6
Delay (s)	150.3	93.1		177.7	46.1	21.5				27.5	132.3	8.9
Level of Service	F	F		F	D	C				C	F	A
Approach Delay (s)		123.6			60.2			0.0			63.7	
Approach LOS		F			E			A			E	

Intersection Summary			
HCM 2000 Control Delay	76.5	HCM 2000 Level of Service	E
HCM 2000 Volume to Capacity ratio	1.20		
Actuated Cycle Length (s)	140.0	Sum of lost time (s)	19.0
Intersection Capacity Utilization	121.1%	ICU Level of Service	H
Analysis Period (min)	15		
c Critical Lane Group			

Movement	EBL	EBT	EBR	WBL	WBT	WBR	NBL	NBT	NBR	SBL	SBT	SBR
Lane Configurations												
Traffic Volume (veh/h)	315	655	480	1000	215	190	60	565	1100	210	1319	160
Future Volume (veh/h)	315	655	480	1000	215	190	60	565	1100	210	1319	160
Initial Q (Qb), veh	0	0	0	0	0	0	0	0	0	0	0	0
Ped-Bike Adj(A_pbT)	1.00		1.00	1.00		1.00	1.00		1.00	1.00		1.00
Parking Bus, Adj	1.00	1.00	1.00	1.00	1.00	1.00	1.00	1.00	1.00	1.00	1.00	1.00
Work Zone On Approach		No			No			No			No	
Adj Sat Flow, veh/h/ln	1885	1885	1885	1870	1870	1870	1885	1885	1885	1885	1885	1885
Adj Flow Rate, veh/h	321	668	0	923	355	0	61	577	0	214	1346	0
Peak Hour Factor	0.98	0.98	0.98	0.98	0.98	0.98	0.98	0.98	0.98	0.98	0.98	0.98
Percent Heavy Veh, %	1	1	1	2	2	2	1	1	1	1	1	1
Cap, veh/h	314	660		1120	588		79	1029		259	1587	
Arrive On Green	0.17	0.17	0.00	0.10	0.10	0.00	0.04	0.20	0.00	0.14	0.31	0.00
Sat Flow, veh/h	1795	3770	1598	3563	1870	1585	1795	5147	1598	1795	5147	1598
Grp Volume(v), veh/h	321	668	0	923	355	0	61	577	0	214	1346	0
Grp Sat Flow(s),veh/h/ln	1795	1885	1598	1781	1870	1585	1795	1716	1598	1795	1716	1598
Q Serve(g_s), s	21.0	21.0	0.0	30.5	21.8	0.0	4.0	12.1	0.0	13.9	29.4	0.0
Cycle Q Clear(g_c), s	21.0	21.0	0.0	30.5	21.8	0.0	4.0	12.1	0.0	13.9	29.4	0.0
Prop In Lane	1.00		1.00	1.00		1.00	1.00		1.00	1.00		1.00
Lane Grp Cap(c), veh/h	314	660		1120	588		79	1029		259	1587	
V/C Ratio(X)	1.02	1.01		0.82	0.60		0.77	0.56		0.83	0.85	
Avail Cap(c_a), veh/h	314	660		1128	592		135	1029		269	1587	
HCM Platoon Ratio	1.00	1.00	1.00	0.33	0.33	0.33	1.00	1.00	1.00	1.00	1.00	1.00
Upstream Filter(I)	1.00	1.00	0.00	0.77	0.77	0.00	0.11	0.11	0.00	1.00	1.00	0.00
Uniform Delay (d), s/veh	49.5	49.5	0.0	50.5	46.6	0.0	56.8	43.2	0.0	49.9	38.9	0.0
Incr Delay (d2), s/veh	56.4	38.2	0.0	5.0	2.9	0.0	2.5	0.2	0.0	19.1	5.8	0.0
Initial Q Delay(d3),s/veh	0.0	0.0	0.0	0.0	0.0	0.0	0.0	0.0	0.0	0.0	0.0	0.0
%ile BackOfQ(50%),veh/ln	14.2	13.2	0.0	15.3	11.4	0.0	1.9	5.2	0.0	7.6	13.1	0.0
Unsig. Movement Delay, s/veh												
LnGrp Delay(d),s/veh	105.9	87.7	0.0	55.6	49.6	0.0	59.3	43.5	0.0	69.1	44.7	0.0
LnGrp LOS	F	F		E	D		E	D		E	D	
Approach Vol, veh/h		989	A		1278	A		638	A		1560	A
Approach Delay, s/veh		93.6			53.9			45.0			48.0	
Approach LOS		F			D			D			D	

Timer - Assigned Phs		2	3	4		6	7	8				
Phs Duration (G+Y+Rc), s		42.7	9.3	42.0		26.0	22.3	29.0				
Change Period (Y+Rc), s		5.0	4.0	5.0		5.0	5.0	* 5				
Max Green Setting (Gmax), s		38.0	9.0	33.0		21.0	18.0	* 24				
Max Q Clear Time (g_c+I1), s		32.5	6.0	31.4		23.0	15.9	14.1				
Green Ext Time (p_c), s		5.2	0.0	1.5		0.0	0.2	4.4				

Intersection Summary	
HCM 6th Ctrl Delay	59.4
HCM 6th LOS	E

Notes

User approved volume balancing among the lanes for turning movement.
* HCM 6th computational engine requires equal clearance times for the phases crossing the barrier.
User approved changes to right turn type.

Movement	EBL	EBT	EBR	WBL	WBT	WBR	NBL	NBT	NBR	SBL	SBT	SBR
Lane Configurations												
Traffic Volume (veh/h)	150	1790	30	5	1265	5	25	5	5	10	5	115
Future Volume (veh/h)	150	1790	30	5	1265	5	25	5	5	10	5	115
Initial Q (Qb), veh	0	0	0	0	0	0	0	0	0	0	0	0
Ped-Bike Adj(A_pbT)	1.00		1.00	1.00		1.00	1.00		1.00	1.00		1.00
Parking Bus, Adj	1.00	1.00	1.00	1.00	1.00	1.00	1.00	1.00	1.00	1.00	1.00	1.00
Work Zone On Approach		No			No			No			No	
Adj Sat Flow, veh/h/ln	1885	1885	1885	1870	1870	1870	1900	1900	1900	1870	1870	1870
Adj Flow Rate, veh/h	158	1884	32	5	1332	5	26	5	5	11	5	121
Peak Hour Factor	0.95	0.95	0.95	0.95	0.95	0.95	0.95	0.95	0.95	0.95	0.95	0.95
Percent Heavy Veh, %	1	1	1	2	2	2	0	0	0	2	2	2
Cap, veh/h	188	2811	48	11	2476	9	174	77	77	144	57	153
Arrive On Green	0.14	1.00	1.00	0.01	0.68	0.68	0.10	0.10	0.10	0.10	0.10	0.10
Sat Flow, veh/h	1795	3604	61	1781	3631	14	1178	792	792	963	584	1580
Grp Volume(v), veh/h	158	934	982	5	652	685	26	0	10	16	0	121
Grp Sat Flow(s),veh/h/ln	1795	1791	1874	1781	1777	1868	1178	0	1584	1547	0	1580
Q Serve(g_s), s	10.3	0.0	0.0	0.3	22.1	22.1	2.3	0.0	0.7	0.0	0.0	9.0
Cycle Q Clear(g_c), s	10.3	0.0	0.0	0.3	22.1	22.1	3.2	0.0	0.7	0.9	0.0	9.0
Prop In Lane	1.00		0.03	1.00		0.01	1.00		0.50	0.69		1.00
Lane Grp Cap(c), veh/h	188	1397	1462	11	1211	1273	174	0	154	201	0	153
V/C Ratio(X)	0.84	0.67	0.67	0.44	0.54	0.54	0.15	0.00	0.07	0.08	0.00	0.79
Avail Cap(c_a), veh/h	314	1397	1462	134	1211	1273	264	0	264	307	0	263
HCM Platoon Ratio	1.33	1.33	1.33	1.00	1.00	1.00	1.00	1.00	1.00	1.00	1.00	1.00
Upstream Filter(I)	0.09	0.09	0.09	1.00	1.00	1.00	1.00	0.00	1.00	1.00	0.00	1.00
Uniform Delay (d), s/veh	50.7	0.0	0.0	59.4	9.6	9.6	50.8	0.0	49.2	49.4	0.0	53.0
Incr Delay (d2), s/veh	1.0	0.2	0.2	24.3	1.7	1.6	0.6	0.0	0.3	0.2	0.0	12.0
Initial Q Delay(d3),s/veh	0.0	0.0	0.0	0.0	0.0	0.0	0.0	0.0	0.0	0.0	0.0	0.0
%ile BackOfQ(50%),veh/ln	4.5	0.1	0.1	0.2	8.3	8.7	0.8	0.0	0.3	0.5	0.0	4.1
Unsig. Movement Delay, s/veh												
LnGrp Delay(d),s/veh	51.7	0.2	0.2	83.7	11.3	11.2	51.4	0.0	49.5	49.6	0.0	65.0
LnGrp LOS	D	A	A	F	B	B	D	A	D	D	A	E
Approach Vol, veh/h		2074			1342			36			137	
Approach Delay, s/veh		4.1			11.5			50.8			63.2	
Approach LOS		A			B			D			E	

Timer - Assigned Phs	1	2		4	5	6		8
Phs Duration (G+Y+Rc), s	16.5	86.8		16.6	4.8	98.6		16.6
Change Period (Y+Rc), s	4.0	5.0		5.0	4.0	5.0		5.0
Max Green Setting (Gmax), s	21.0	65.0		20.0	9.0	77.0		20.0
Max Q Clear Time (g_c+I1), s	12.3	24.1		11.0	2.3	2.0		5.2
Green Ext Time (p_c), s	0.3	38.1		0.4	0.0	63.5		0.1

Intersection Summary	
HCM 6th Ctrl Delay	9.6
HCM 6th LOS	A

Movement	EBL	EBT	EBR	WBL	WBT	WBR	NBL	NBT	NBR	SBL	SBT	SBR
Lane Configurations												
Traffic Volume (veh/h)	20	1585	190	70	1135	15	105	15	55	15	20	35
Future Volume (veh/h)	20	1585	190	70	1135	15	105	15	55	15	20	35
Initial Q (Qb), veh	0	0	0	0	0	0	0	0	0	0	0	0
Ped-Bike Adj(A_pbT)	1.00		1.00	1.00		1.00	1.00		0.98	1.00		0.97
Parking Bus, Adj	1.00	1.00	1.00	1.00	1.00	1.00	1.00	1.00	1.00	1.00	1.00	1.00
Work Zone On Approach		No			No			No			No	
Adj Sat Flow, veh/h/ln	1885	1885	1885	1870	1870	1870	1900	1900	1900	1870	1870	1870
Adj Flow Rate, veh/h	21	1668	200	74	1195	16	111	16	58	16	21	37
Peak Hour Factor	0.95	0.95	0.95	0.95	0.95	0.95	0.95	0.95	0.95	0.95	0.95	0.95
Percent Heavy Veh, %	1	1	1	2	2	2	0	0	0	2	2	2
Cap, veh/h	490	2106	248	96	1526	20	157	31	111	87	29	51
Arrive On Green	0.27	0.65	0.65	0.02	0.14	0.14	0.09	0.09	0.09	0.05	0.05	0.05
Sat Flow, veh/h	1795	3227	380	1781	3590	48	1810	355	1287	1781	595	1048
Grp Volume(v), veh/h	21	913	955	74	591	620	111	0	74	16	0	58
Grp Sat Flow(s),veh/h/ln	1795	1791	1816	1781	1777	1862	1810	0	1642	1781	0	1642
Q Serve(g_s), s	1.0	43.3	46.2	5.0	38.6	38.6	7.2	0.0	5.2	1.0	0.0	4.2
Cycle Q Clear(g_c), s	1.0	43.3	46.2	5.0	38.6	38.6	7.2	0.0	5.2	1.0	0.0	4.2
Prop In Lane	1.00		0.21	1.00		0.03	1.00		0.78	1.00		0.64
Lane Grp Cap(c), veh/h	490	1169	1185	96	755	791	157	0	142	87	0	80
V/C Ratio(X)	0.04	0.78	0.81	0.77	0.78	0.78	0.71	0.00	0.52	0.18	0.00	0.73
Avail Cap(c_a), veh/h	490	1169	1185	208	755	791	271	0	246	267	0	246
HCM Platoon Ratio	1.00	1.00	1.00	0.33	0.33	0.33	1.00	1.00	1.00	1.00	1.00	1.00
Upstream Filter(I)	1.00	1.00	1.00	0.81	0.81	0.81	1.00	0.00	1.00	1.00	0.00	1.00
Uniform Delay (d), s/veh	32.1	14.8	15.3	58.2	46.2	46.2	53.3	0.0	52.4	54.8	0.0	56.3
Incr Delay (d2), s/veh	0.0	5.2	5.9	10.2	6.5	6.3	8.1	0.0	4.2	1.4	0.0	16.2
Initial Q Delay(d3),s/veh	0.0	0.0	0.0	0.0	0.0	0.0	0.0	0.0	0.0	0.0	0.0	0.0
%ile BackOfQ(50%),veh/ln	0.5	17.5	19.0	2.6	19.7	20.6	3.6	0.0	2.3	0.5	0.0	2.1
Unsig. Movement Delay, s/veh												
LnGrp Delay(d),s/veh	32.1	20.0	21.2	68.4	52.8	52.5	61.5	0.0	56.6	56.2	0.0	72.5
LnGrp LOS	C	B	C	E	D	D	E	A	E	E	A	E
Approach Vol, veh/h		1889			1285			185			74	
Approach Delay, s/veh		20.7			53.5			59.5			69.0	
Approach LOS		C			D			E			E	

Timer - Assigned Phs	1	2		4	5	6		8
Phs Duration (G+Y+Rc), s	37.8	56.0		15.4	10.4	83.3		10.8
Change Period (Y+Rc), s	5.0	* 5		5.0	4.0	5.0		5.0
Max Green Setting (Gmax), s	14.0	* 51		18.0	14.0	51.0		18.0
Max Q Clear Time (g_c+I1), s	3.0	40.6		9.2	7.0	48.2		6.2
Green Ext Time (p_c), s	0.0	9.4		0.6	0.1	2.7		0.2

Intersection Summary	
HCM 6th Ctrl Delay	36.1
HCM 6th LOS	D

Notes

User approved pedestrian interval to be less than phase max green.

* HCM 6th computational engine requires equal clearance times for the phases crossing the barrier.

Movement	EBL	EBT	EBR	WBL	WBT	WBR	NBL	NBT	NBR	SBL	SBT	SBR
Lane Configurations												
Traffic Volume (veh/h)	25	1615	30	35	1070	85	120	15	40	70	15	35
Future Volume (veh/h)	25	1615	30	35	1070	85	120	15	40	70	15	35
Initial Q (Qb), veh	0	0	0	0	0	0	0	0	0	0	0	0
Ped-Bike Adj(A_pbT)	1.00		1.00	1.00		1.00	1.00		1.00	1.00		1.00
Parking Bus, Adj	1.00	1.00	1.00	1.00	1.00	1.00	1.00	1.00	1.00	1.00	1.00	1.00
Work Zone On Approach		No			No			No			No	
Adj Sat Flow, veh/h/ln	1885	1885	1885	1870	1870	1870	1826	1826	1826	1885	1885	1885
Adj Flow Rate, veh/h	28	1794	33	39	1189	94	133	17	44	78	17	39
Peak Hour Factor	0.90	0.90	0.90	0.90	0.90	0.90	0.90	0.90	0.90	0.90	0.90	0.90
Percent Heavy Veh, %	1	1	1	2	2	2	5	5	5	1	1	1
Cap, veh/h	45	2333	43	54	2180	172	191	26	49	282	56	367
Arrive On Green	0.03	0.86	0.86	0.03	0.65	0.65	0.20	0.20	0.20	0.20	0.20	0.20
Sat Flow, veh/h	1795	3598	66	1781	3336	263	687	129	239	1109	275	1598
Grp Volume(v), veh/h	28	891	936	39	633	650	194	0	0	95	0	39
Grp Sat Flow(s),veh/h/ln	1795	1791	1873	1781	1777	1822	1055	0	0	1384	0	1598
Q Serve(g_s), s	1.8	24.3	24.6	2.6	23.0	23.1	15.4	0.0	0.0	0.0	0.0	2.3
Cycle Q Clear(g_c), s	1.8	24.3	24.6	2.6	23.0	23.1	22.4	0.0	0.0	6.9	0.0	2.3
Prop In Lane	1.00		0.04	1.00		0.14	0.69		0.23	0.82		1.00
Lane Grp Cap(c), veh/h	45	1161	1215	54	1161	1191	266	0	0	338	0	367
V/C Ratio(X)	0.62	0.77	0.77	0.72	0.54	0.55	0.73	0.00	0.00	0.28	0.00	0.11
Avail Cap(c_a), veh/h	135	1161	1215	134	1161	1191	307	0	0	379	0	413
HCM Platoon Ratio	1.33	1.33	1.33	1.00	1.00	1.00	1.00	1.00	1.00	1.00	1.00	1.00
Upstream Filter(I)	0.32	0.32	0.32	1.00	1.00	1.00	1.00	0.00	0.00	1.00	0.00	1.00
Uniform Delay (d), s/veh	57.4	4.6	4.6	57.7	11.2	11.2	49.5	0.0	0.0	40.7	0.0	36.5
Incr Delay (d2), s/veh	4.3	1.6	1.6	16.5	1.8	1.8	7.2	0.0	0.0	0.4	0.0	0.1
Initial Q Delay(d3),s/veh	0.0	0.0	0.0	0.0	0.0	0.0	0.0	0.0	0.0	0.0	0.0	0.0
%ile BackOfQ(50%),veh/ln	0.9	4.2	4.4	1.4	8.9	9.1	6.3	0.0	0.0	2.5	0.0	0.9
Unsig. Movement Delay, s/veh												
LnGrp Delay(d),s/veh	61.7	6.2	6.2	74.2	13.0	13.0	56.7	0.0	0.0	41.1	0.0	36.6
LnGrp LOS	E	A	A	E	B	B	E	A	A	D	A	D
Approach Vol, veh/h		1855			1322			194			134	
Approach Delay, s/veh		7.0			14.8			56.7			39.8	
Approach LOS		A			B			E			D	

Timer - Assigned Phs	1	2		4	5	6		8
Phs Duration (G+Y+Rc), s	7.0	83.4		29.6	7.6	82.8		29.6
Change Period (Y+Rc), s	4.0	5.0		5.0	4.0	5.0		5.0
Max Green Setting (Gmax), s	9.0	69.0		28.0	9.0	69.0		28.0
Max Q Clear Time (g_c+I1), s	3.8	25.1		8.9	4.6	26.6		24.4
Green Ext Time (p_c), s	0.0	35.9		0.3	0.0	41.7		0.2

Intersection Summary	
HCM 6th Ctrl Delay	14.0
HCM 6th LOS	B

Notes

User approved pedestrian interval to be less than phase max green.

Movement	EBL	EBT	EBR	WBL	WBT	WBR	NBL	NBT	NBR	SBL	SBT	SBR
Lane Configurations												
Traffic Volume (veh/h)	45	1703	15	10	1152	40	20	0	15	35	0	30
Future Volume (veh/h)	45	1703	15	10	1152	40	20	0	15	35	0	30
Initial Q (Qb), veh	0	0	0	0	0	0	0	0	0	0	0	0
Ped-Bike Adj(A_pbT)	1.00		1.00	1.00		1.00	1.00		1.00	1.00		1.00
Parking Bus, Adj	1.00	1.00	1.00	1.00	1.00	1.00	1.00	1.00	1.00	1.00	1.00	1.00
Work Zone On Approach		No			No			No			No	
Adj Sat Flow, veh/h/ln	1856	1856	1856	1870	1870	1870	1781	1781	1781	1900	1900	1900
Adj Flow Rate, veh/h	47	1774	16	10	1200	42	21	0	16	36	0	31
Peak Hour Factor	0.96	0.96	0.96	0.96	0.96	0.96	0.96	0.96	0.96	0.96	0.96	0.96
Percent Heavy Veh, %	3	3	3	2	2	2	8	8	8	0	0	0
Cap, veh/h	68	2430	1084	22	2357	1051	81	0	150	81	0	160
Arrive On Green	0.04	0.69	0.69	0.01	0.66	0.66	0.10	0.00	0.10	0.10	0.00	0.10
Sat Flow, veh/h	1767	3526	1572	1781	3554	1585	8	0	1510	8	0	1610
Grp Volume(v), veh/h	47	1774	16	10	1200	42	21	0	16	36	0	31
Grp Sat Flow(s),veh/h/ln	1767	1763	1572	1781	1777	1585	8	0	1510	8	0	1610
Q Serve(g_s), s	2.3	28.1	0.3	0.5	15.3	0.8	0.1	0.0	0.9	0.1	0.0	1.6
Cycle Q Clear(g_c), s	2.3	28.1	0.3	0.5	15.3	0.8	8.9	0.0	0.9	8.9	0.0	1.6
Prop In Lane	1.00		1.00	1.00		1.00	1.00		1.00	1.00		1.00
Lane Grp Cap(c), veh/h	68	2430	1084	22	2357	1051	81	0	150	81	0	160
V/C Ratio(X)	0.69	0.73	0.01	0.46	0.51	0.04	0.26	0.00	0.11	0.44	0.00	0.19
Avail Cap(c_a), veh/h	180	2690	1200	100	2549	1137	407	0	524	226	0	324
HCM Platoon Ratio	1.00	1.00	1.00	1.00	1.00	1.00	1.00	1.00	1.00	1.00	1.00	1.00
Upstream Filter(I)	1.00	1.00	1.00	1.00	1.00	1.00	1.00	0.00	1.00	1.00	0.00	1.00
Uniform Delay (d), s/veh	42.4	8.7	4.4	43.8	7.7	5.2	44.7	0.0	36.7	44.7	0.0	37.0
Incr Delay (d2), s/veh	11.8	1.3	0.0	14.1	0.4	0.0	1.7	0.0	0.3	7.9	0.0	1.3
Initial Q Delay(d3),s/veh	0.0	0.0	0.0	0.0	0.0	0.0	0.0	0.0	0.0	0.0	0.0	0.0
%ile BackOfQ(50%),veh/ln	1.2	9.0	0.1	0.3	5.1	0.2	0.5	0.0	0.3	1.0	0.0	0.7
Unsig. Movement Delay, s/veh												
LnGrp Delay(d),s/veh	54.2	9.9	4.4	58.0	8.0	5.2	46.3	0.0	37.0	52.6	0.0	38.2
LnGrp LOS	D	A	A	E	A	A	D	A	D	D	A	D
Approach Vol, veh/h		1837			1252			37			67	
Approach Delay, s/veh		11.0			8.3			42.3			45.9	
Approach LOS		B			A			D			D	

Timer - Assigned Phs	1	2		4	5	6		8
Phs Duration (G+Y+Rc), s	9.8	65.7		13.9	7.5	68.0		13.9
Change Period (Y+Rc), s	6.4	6.4		5.0	6.4	6.4		5.0
Max Green Setting (Gmax), s	9.1	64.1		18.0	5.0	68.2		31.0
Max Q Clear Time (g_c+I1), s	4.3	17.3		10.9	2.5	30.1		10.9
Green Ext Time (p_c), s	0.0	24.2		0.2	0.0	31.5		0.1

Intersection Summary		
HCM 6th Ctrl Delay		11.1
HCM 6th LOS		B

Intersection	
Int Delay, s/veh	1.6

Movement	EBL	EBT	WBT	WBR	SBL	SBR
Lane Configurations						
Traffic Vol, veh/h	43	385	65	11	11	44
Future Vol, veh/h	43	385	65	11	11	44
Conflicting Peds, #/hr	0	0	0	0	0	0
Sign Control	Free	Free	Free	Free	Stop	Stop
RT Channelized	-	None	-	None	-	None
Storage Length	450	-	-	-	0	-
Veh in Median Storage, #	-	0	0	-	0	-
Grade, %	-	0	0	-	0	-
Peak Hour Factor	89	89	89	89	89	89
Heavy Vehicles, %	2	2	2	2	49	49
Mvmt Flow	48	433	73	12	12	49

Major/Minor	Major1		Major2		Minor2	
Conflicting Flow All	85	0	-	0	608	79
Stage 1	-	-	-	-	79	-
Stage 2	-	-	-	-	529	-
Critical Hdwy	4.12	-	-	-	6.89	6.69
Critical Hdwy Stg 1	-	-	-	-	5.89	-
Critical Hdwy Stg 2	-	-	-	-	5.89	-
Follow-up Hdwy	2.218	-	-	-	3.941	3.741
Pot Cap-1 Maneuver	1512	-	-	-	391	865
Stage 1	-	-	-	-	838	-
Stage 2	-	-	-	-	506	-
Platoon blocked, %		-	-	-		
Mov Cap-1 Maneuver	1512	-	-	-	378	865
Mov Cap-2 Maneuver	-	-	-	-	378	-
Stage 1	-	-	-	-	811	-
Stage 2	-	-	-	-	506	-

Approach	EB	WB	SB
HCM Control Delay, s	0.7	0	10.7
HCM LOS			B

Minor Lane/Major Mvmt	EBL	EBT	WBT	WBR	SBLn1
Capacity (veh/h)	1512	-	-	-	688
HCM Lane V/C Ratio	0.032	-	-	-	0.09
HCM Control Delay (s)	7.5	-	-	-	10.7
HCM Lane LOS	A	-	-	-	B
HCM 95th %tile Q(veh)	0.1	-	-	-	0.3

Intersection	
Int Delay, s/veh	6.5

Movement	EBL	EBT	EBR	WBL	WBT	WBR	NBL	NBT	NBR	SBL	SBT	SBR
Lane Configurations												
Traffic Vol, veh/h	0	223	15	5	109	0	100	5	190	5	0	0
Future Vol, veh/h	0	223	15	5	109	0	100	5	190	5	0	0
Conflicting Peds, #/hr	0	0	0	0	0	0	0	0	0	0	0	0
Sign Control	Free	Free	Free	Free	Free	Free	Stop	Stop	Stop	Stop	Stop	Stop
RT Channelized	-	-	None	-	-	None	-	-	None	-	-	None
Storage Length	-	-	-	-	-	-	-	-	-	-	-	-
Veh in Median Storage, #	-	0	-	-	0	-	-	0	-	-	0	-
Grade, %	-	0	-	-	0	-	-	0	-	-	0	-
Peak Hour Factor	89	89	89	89	89	89	89	89	89	89	89	89
Heavy Vehicles, %	4	4	4	30	30	30	1	1	1	0	0	0
Mvmt Flow	0	251	17	6	122	0	112	6	213	6	0	0

Major/Minor	Major1			Major2			Minor1			Minor2		
Conflicting Flow All	122	0	0	268	0	0	394	394	134	263	402	122
Stage 1	-	-	-	-	-	-	260	260	-	134	134	-
Stage 2	-	-	-	-	-	-	134	134	-	129	268	-
Critical Hdwy	4.16	-	-	4.55	-	-	7.315	6.515	6.915	7.3	6.5	6.2
Critical Hdwy Stg 1	-	-	-	-	-	-	6.515	5.515	-	6.1	5.5	-
Critical Hdwy Stg 2	-	-	-	-	-	-	6.115	5.515	-	6.5	5.5	-
Follow-up Hdwy	2.238	-	-	2.485	-	-	3.5095	4.0095	3.3095	3.5	4	3.3
Pot Cap-1 Maneuver	1451	-	-	1131	-	-	555	544	894	684	540	935
Stage 1	-	-	-	-	-	-	725	694	-	874	789	-
Stage 2	-	-	-	-	-	-	871	787	-	867	691	-
Platoon blocked, %		-	-		-	-						
Mov Cap-1 Maneuver	1451	-	-	1131	-	-	552	541	894	514	537	935
Mov Cap-2 Maneuver	-	-	-	-	-	-	552	541	-	514	537	-
Stage 1	-	-	-	-	-	-	725	694	-	874	784	-
Stage 2	-	-	-	-	-	-	866	782	-	655	691	-

Approach	EB	WB	NB	SB
HCM Control Delay, s	0	0.4	13.9	12.1
HCM LOS			B	B

Minor Lane/Major Mvmt	NBLn1	EBL	EBT	EBR	WBL	WBT	WBR	SBLn1
Capacity (veh/h)	732	1451	-	-	1131	-	-	514
HCM Lane V/C Ratio	0.453	-	-	-	0.005	-	-	0.011
HCM Control Delay (s)	13.9	0	-	-	8.2	0	-	12.1
HCM Lane LOS	B	A	-	-	A	A	-	B
HCM 95th %tile Q(veh)	2.4	0	-	-	0	-	-	0

Movement	WBL	WBR	NBT	NBR	SBL	SBT
Lane Configurations						
Traffic Volume (veh/h)	32	167	970	187	66	325
Future Volume (veh/h)	32	167	970	187	66	325
Initial Q (Qb), veh	0	0	0	0	0	0
Ped-Bike Adj(A_pbT)	1.00	1.00		1.00	1.00	
Parking Bus, Adj	1.00	1.00	1.00	1.00	1.00	1.00
Work Zone On Approach	No		No			No
Adj Sat Flow, veh/h/ln	1618	1618	1856	1856	1826	1826
Adj Flow Rate, veh/h	34	180	1043	201	71	349
Peak Hour Factor	0.93	0.93	0.93	0.93	0.93	0.93
Percent Heavy Veh, %	19	19	3	3	5	5
Cap, veh/h	35	185	1033	199	100	1368
Arrive On Green	0.16	0.16	0.68	0.68	0.03	0.75
Sat Flow, veh/h	221	1169	1512	291	1739	1826
Grp Volume(v), veh/h	215	0	0	1244	71	349
Grp Sat Flow(s),veh/h/ln	1397	0	0	1803	1739	1826
Q Serve(g_s), s	23.8	0.0	0.0	106.1	2.1	9.2
Cycle Q Clear(g_c), s	23.8	0.0	0.0	106.1	2.1	9.2
Prop In Lane	0.16	0.84		0.16	1.00	
Lane Grp Cap(c), veh/h	220	0	0	1232	100	1368
V/C Ratio(X)	0.98	0.00	0.00	1.01	0.71	0.26
Avail Cap(c_a), veh/h	220	0	0	1232	108	1368
HCM Platoon Ratio	1.00	1.00	1.00	1.00	1.00	1.00
Upstream Filter(I)	1.00	0.00	0.00	1.00	1.00	1.00
Uniform Delay (d), s/veh	65.1	0.0	0.0	24.6	45.6	6.0
Incr Delay (d2), s/veh	53.4	0.0	0.0	28.0	20.3	0.1
Initial Q Delay(d3),s/veh	0.0	0.0	0.0	0.0	0.0	0.0
%ile BackOfQ(50%),veh/ln	11.8	0.0	0.0	51.5	2.5	3.5
Unsig. Movement Delay, s/veh						
LnGrp Delay(d),s/veh	118.5	0.0	0.0	52.6	65.9	6.2
LnGrp LOS	F	A	A	F	E	A
Approach Vol, veh/h	215		1244			420
Approach Delay, s/veh	118.5		52.6			16.3
Approach LOS	F		D			B

Timer - Assigned Phs	1	2				6	8
Phs Duration (G+Y+Rc), s	10.3	114.2				124.5	30.8
Change Period (Y+Rc), s	5.5	* 8.1				* 8.1	6.3
Max Green Setting (Gmax), s	5.5	* 1.1E2				* 1.2E2	24.5
Max Q Clear Time (g_c+I1), s	4.1	108.1				11.2	25.8
Green Ext Time (p_c), s	0.0	0.0				3.6	0.0

Intersection Summary	
HCM 6th Ctrl Delay	52.0
HCM 6th LOS	D

Notes

User approved pedestrian interval to be less than phase max green.

User approved volume balancing among the lanes for turning movement.

* HCM 6th computational engine requires equal clearance times for the phases crossing the barrier.

Movement	EBL	EBR	NBL	NBT	SBT	SBR
Lane Configurations						
Traffic Volume (vph)	80	61	81	1305	165	50
Future Volume (vph)	80	61	81	1305	165	50
Ideal Flow (vphpl)	1900	1900	1900	1900	1900	1900
Total Lost time (s)	5.0	5.0	6.5	6.5	6.5	6.5
Lane Util. Factor	1.00	1.00	1.00	1.00	1.00	1.00
Frt	1.00	0.85	1.00	1.00	1.00	0.85
Flt Protected	0.95	1.00	0.95	1.00	1.00	1.00
Satd. Flow (prot)	1641	1468	1752	1845	1743	1482
Flt Permitted	0.95	1.00	0.56	1.00	1.00	1.00
Satd. Flow (perm)	1641	1468	1034	1845	1743	1482
Peak-hour factor, PHF	0.92	0.92	0.92	0.92	0.92	0.92
Adj. Flow (vph)	87	66	88	1418	179	54
RTOR Reduction (vph)	0	60	0	0	0	22
Lane Group Flow (vph)	87	6	88	1418	179	32
Heavy Vehicles (%)	10%	10%	3%	3%	9%	9%
Turn Type	custom	custom	pm+pt	NA	NA	Perm
Protected Phases	3	3	5	2	6	
Permitted Phases	4	4	2			6
Actuated Green, G (s)	6.9	6.9	54.3	54.3	43.3	43.3
Effective Green, g (s)	6.9	6.9	54.3	54.3	43.3	43.3
Actuated g/C Ratio	0.09	0.09	0.75	0.75	0.60	0.60
Clearance Time (s)	5.0	5.0	6.5	6.5	6.5	6.5
Vehicle Extension (s)	2.0	2.0	2.0	5.0	5.0	5.0
Lane Grp Cap (vph)	155	139	816	1378	1038	882
v/s Ratio Prot	c0.05	0.00	0.01	c0.77	0.10	
v/s Ratio Perm			0.07			0.02
v/c Ratio	0.56	0.05	0.11	1.03	0.17	0.04
Uniform Delay, d1	31.5	29.9	2.8	9.2	6.6	6.1
Progression Factor	1.00	1.00	1.00	1.00	1.00	1.00
Incremental Delay, d2	2.8	0.0	0.0	32.0	0.2	0.0
Delay (s)	34.2	30.0	2.8	41.2	6.8	6.1
Level of Service	C	C	A	D	A	A
Approach Delay (s)	32.4			38.9	6.6	
Approach LOS	C			D	A	

Intersection Summary			
HCM 2000 Control Delay	34.4	HCM 2000 Level of Service	C
HCM 2000 Volume to Capacity ratio	1.16		
Actuated Cycle Length (s)	72.7	Sum of lost time (s)	21.0
Intersection Capacity Utilization	82.7%	ICU Level of Service	E
Analysis Period (min)	15		
c Critical Lane Group			

Movement	EBL	EBR	NBL	NBT	SBT	SBR
Lane Configurations						
Traffic Volume (vph)	341	55	20	1045	170	56
Future Volume (vph)	341	55	20	1045	170	56
Ideal Flow (vphpl)	1900	1900	1900	1900	1900	1900
Total Lost time (s)	5.0	5.0	6.0	6.0	6.0	5.0
Lane Util. Factor	1.00	1.00	1.00	1.00	1.00	1.00
Frt	1.00	0.85	1.00	1.00	1.00	0.85
Flt Protected	0.95	1.00	0.95	1.00	1.00	1.00
Satd. Flow (prot)	1770	1583	1752	1845	1810	1538
Flt Permitted	0.95	1.00	0.60	1.00	1.00	1.00
Satd. Flow (perm)	1770	1583	1108	1845	1810	1538
Peak-hour factor, PHF	0.91	0.91	0.91	0.91	0.91	0.91
Adj. Flow (vph)	375	60	22	1148	187	62
RTOR Reduction (vph)	0	45	0	0	0	7
Lane Group Flow (vph)	375	15	22	1148	187	55
Heavy Vehicles (%)	2%	2%	3%	3%	5%	5%
Turn Type	custom	custom	pm+pt	NA	NA	pm+ov
Protected Phases	3	3	5	2	6	3
Permitted Phases	4	4	2			6
Actuated Green, G (s)	43.7	43.7	125.3	125.3	115.9	159.6
Effective Green, g (s)	43.7	43.7	125.3	125.3	115.9	159.6
Actuated g/C Ratio	0.24	0.24	0.70	0.70	0.64	0.89
Clearance Time (s)	5.0	5.0	6.0	6.0	6.0	5.0
Vehicle Extension (s)	2.0	2.0	2.0	2.0	2.0	2.0
Lane Grp Cap (vph)	429	384	783	1284	1165	1363
v/s Ratio Prot	c0.21	0.01	0.00	c0.62	0.10	0.01
v/s Ratio Perm			0.02			0.03
v/c Ratio	0.87	0.04	0.03	0.89	0.16	0.04
Uniform Delay, d1	65.5	52.1	8.6	22.0	12.7	1.2
Progression Factor	1.00	1.00	1.00	1.00	1.00	1.00
Incremental Delay, d2	17.1	0.0	0.0	9.8	0.3	0.0
Delay (s)	82.6	52.1	8.6	31.8	13.0	1.2
Level of Service	F	D	A	C	B	A
Approach Delay (s)	78.4			31.4	10.1	
Approach LOS	E			C	B	

Intersection Summary			
HCM 2000 Control Delay	39.6	HCM 2000 Level of Service	D
HCM 2000 Volume to Capacity ratio	0.94		
Actuated Cycle Length (s)	180.0	Sum of lost time (s)	20.0
Intersection Capacity Utilization	83.1%	ICU Level of Service	E
Analysis Period (min)	15		
c Critical Lane Group			

Intersection	
Int Delay, s/veh	0.8

Movement	EBL	EBT	EBR	WBL	WBT	WBR	NBL	NBT	NBR	SBL	SBT	SBR
Lane Configurations												
Traffic Vol, veh/h	0	0	0	15	0	15	10	975	0	0	60	95
Future Vol, veh/h	0	0	0	15	0	15	10	975	0	0	60	95
Conflicting Peds, #/hr	0	0	0	0	0	0	0	0	0	0	0	0
Sign Control	Stop	Stop	Stop	Stop	Stop	Stop	Free	Free	Free	Free	Free	Free
RT Channelized	-	-	None	-	-	None	-	-	None	-	-	None
Storage Length	-	-	-	-	-	500	175	-	-	-	-	375
Veh in Median Storage, #	-	1	-	-	0	-	-	0	-	-	0	-
Grade, %	-	0	-	-	0	-	-	0	-	-	0	-
Peak Hour Factor	83	83	83	83	83	83	83	83	83	83	83	83
Heavy Vehicles, %	0	0	0	19	19	19	3	3	3	4	4	4
Mvmt Flow	0	0	0	18	0	18	12	1175	0	0	72	114

Major/Minor	Minor1			Major1			Major2		
Conflicting Flow All	1328	1385	1175	186	0	-	-	-	0
Stage 1	1199	1199	-	-	-	-	-	-	-
Stage 2	129	186	-	-	-	-	-	-	-
Critical Hdwy	6.59	6.69	6.39	4.13	-	-	-	-	-
Critical Hdwy Stg 1	5.59	5.69	-	-	-	-	-	-	-
Critical Hdwy Stg 2	5.59	5.69	-	-	-	-	-	-	-
Follow-up Hdwy	3.671	4.171	3.471	2.227	-	-	-	-	-
Pot Cap-1 Maneuver	157	132	215	1382	-	0	0	-	-
Stage 1	264	240	-	-	-	0	0	-	-
Stage 2	857	715	-	-	-	0	0	-	-
Platoon blocked, %					-			-	-
Mov Cap-1 Maneuver	156	0	215	1382	-	-	-	-	-
Mov Cap-2 Maneuver	156	0	-	-	-	-	-	-	-
Stage 1	262	0	-	-	-	-	-	-	-
Stage 2	857	0	-	-	-	-	-	-	-

Approach	WB	NB	SB
HCM Control Delay, s	27.2	0.1	0
HCM LOS	D		

Minor Lane/Major Mvmt	NBL	NBT	WBLn1	WBLn2	SBT	SBR
Capacity (veh/h)	1382	-	156	215	-	-
HCM Lane V/C Ratio	0.009	-	0.116	0.084	-	-
HCM Control Delay (s)	7.6	-	31.1	23.3	-	-
HCM Lane LOS	A	-	D	C	-	-
HCM 95th %tile Q(veh)	0	-	0.4	0.3	-	-

Movement	EBL	EBR	NBL	NBT	SBT	SBR
Lane Configurations						
Traffic Volume (veh/h)	625	10	90	360	70	5
Future Volume (veh/h)	625	10	90	360	70	5
Initial Q (Qb), veh	0	0	0	0	0	0
Ped-Bike Adj(A_pbT)	1.00	1.00	1.00			1.00
Parking Bus, Adj	1.00	1.00	1.00	1.00	1.00	1.00
Work Zone On Approach	No			No	No	
Adj Sat Flow, veh/h/ln	1856	1856	1870	1870	1811	1811
Adj Flow Rate, veh/h	762	12	110	439	85	6
Peak Hour Factor	0.82	0.82	0.82	0.82	0.82	0.82
Percent Heavy Veh, %	3	3	2	2	6	6
Cap, veh/h	813	724	166	570	658	46
Arrive On Green	0.46	0.46	0.39	0.39	0.39	0.39
Sat Flow, veh/h	1767	1572	294	1449	1672	118
Grp Volume(v), veh/h	762	12	549	0	0	91
Grp Sat Flow(s),veh/h/ln	1767	1572	1743	0	0	1790
Q Serve(g_s), s	35.2	0.4	18.8	0.0	0.0	2.8
Cycle Q Clear(g_c), s	35.2	0.4	23.8	0.0	0.0	2.8
Prop In Lane	1.00	1.00	0.20			0.07
Lane Grp Cap(c), veh/h	813	724	736	0	0	704
V/C Ratio(X)	0.94	0.02	0.75	0.00	0.00	0.13
Avail Cap(c_a), veh/h	1000	890	1233	0	0	704
HCM Platoon Ratio	1.00	1.00	1.00	1.00	1.00	1.00
Upstream Filter(I)	1.00	1.00	1.00	0.00	0.00	1.00
Uniform Delay (d), s/veh	22.0	12.6	22.9	0.0	0.0	16.7
Incr Delay (d2), s/veh	13.9	0.0	3.2	0.0	0.0	0.2
Initial Q Delay(d3),s/veh	0.0	0.0	0.0	0.0	0.0	0.0
%ile BackOfQ(50%),veh/ln	16.5	0.1	9.9	0.0	0.0	1.1
Unsig. Movement Delay, s/veh						
LnGrp Delay(d),s/veh	35.9	12.6	26.1	0.0	0.0	16.9
LnGrp LOS	D	B	C	A	A	B
Approach Vol, veh/h	774			549	91	
Approach Delay, s/veh	35.5			26.1	16.9	
Approach LOS	D			C	B	

Timer - Assigned Phs		2		4		6
Phs Duration (G+Y+Rc), s		40.2		45.9		40.2
Change Period (Y+Rc), s		6.3		6.3		6.3
Max Green Setting (Gmax), s		58.7		48.7		33.7
Max Q Clear Time (g_c+I1), s		25.8		37.2		4.8
Green Ext Time (p_c), s		8.0		2.4		0.9

Intersection Summary	
HCM 6th Ctrl Delay	30.7
HCM 6th LOS	C

Movement	EBL	EBT	EBR	WBL	WBT	WBR	NBL	NBT	NBR	SBL	SBT	SBR
Lane Configurations												
Traffic Volume (veh/h)	185	10	25	5	0	5	10	1127	0	5	386	70
Future Volume (veh/h)	185	10	25	5	0	5	10	1127	0	5	386	70
Initial Q (Qb), veh	0	0	0	0	0	0	0	0	0	0	0	0
Ped-Bike Adj(A_pbT)	1.00		1.00	1.00		1.00	1.00		1.00	1.00		1.00
Parking Bus, Adj	1.00	1.00	1.00	1.00	1.00	1.00	1.00	1.00	1.00	1.00	1.00	1.00
Work Zone On Approach		No			No			No			No	
Adj Sat Flow, veh/h/ln	1885	1885	1885	1693	1693	1693	1752	1752	1752	1648	1648	1648
Adj Flow Rate, veh/h	201	11	27	5	0	5	11	1225	0	5	420	76
Peak Hour Factor	0.92	0.92	0.92	0.92	0.92	0.92	0.92	0.92	0.92	0.92	0.92	0.92
Percent Heavy Veh, %	1	1	1	14	14	14	10	10	10	17	17	17
Cap, veh/h	211	9	22	268	0	253	542	1191	0	58	1115	945
Arrive On Green	0.13	0.13	0.13	0.00	0.00	0.18	0.01	0.68	0.00	0.00	0.68	0.68
Sat Flow, veh/h	1225	67	165	1612	0	1434	1668	1752	0	1570	1648	1397
Grp Volume(v), veh/h	239	0	0	5	0	5	11	1225	0	5	420	76
Grp Sat Flow(s),veh/h/ln	1457	0	0	1612	0	1434	1668	1752	0	1570	1648	1397
Q Serve(g_s), s	18.6	0.0	0.0	0.4	0.0	0.4	0.3	94.9	0.0	0.1	15.4	2.6
Cycle Q Clear(g_c), s	18.6	0.0	0.0	0.4	0.0	0.4	0.3	94.9	0.0	0.1	15.4	2.6
Prop In Lane	0.84		0.11	1.00		1.00	1.00		0.00	1.00		1.00
Lane Grp Cap(c), veh/h	242	0	0	268	0	253	542	1191	0	58	1115	945
V/C Ratio(X)	0.99	0.00	0.00	0.02	0.00	0.02	0.02	1.03	0.00	0.09	0.38	0.08
Avail Cap(c_a), veh/h	242	0	0	348	0	335	577	1191	0	97	1121	950
HCM Platoon Ratio	1.00	1.00	1.00	1.00	1.00	1.00	1.00	1.00	1.00	1.00	1.00	1.00
Upstream Filter(I)	1.00	0.00	0.00	1.00	0.00	1.00	1.00	1.00	0.00	1.00	1.00	1.00
Uniform Delay (d), s/veh	62.2	0.0	0.0	50.4	0.0	47.5	7.9	22.3	0.0	39.1	9.8	7.7
Incr Delay (d2), s/veh	54.7	0.0	0.0	0.0	0.0	0.0	0.0	33.6	0.0	0.6	0.5	0.1
Initial Q Delay(d3),s/veh	0.0	0.0	0.0	0.0	0.0	0.0	0.0	0.0	0.0	0.0	0.0	0.0
%ile BackOfQ(50%),veh/ln	12.2	0.0	0.0	0.2	0.0	0.1	0.1	46.6	0.0	0.1	5.6	0.8
Unsig. Movement Delay, s/veh												
LnGrp Delay(d),s/veh	116.9	0.0	0.0	50.4	0.0	47.5	7.9	55.9	0.0	39.7	10.3	7.8
LnGrp LOS	F	A	A	D	A	D	A	F	A	D	B	A
Approach Vol, veh/h		239			10			1236			501	
Approach Delay, s/veh		116.9			49.0			55.5			10.2	
Approach LOS		F			D			E			B	

Timer - Assigned Phs	1	2	3	4	5	6		8
Phs Duration (G+Y+Rc), s	6.0	102.0	6.0	25.5	6.5	101.5		31.5
Change Period (Y+Rc), s	5.5	7.1	5.5	6.9	5.5	7.1		* 6.9
Max Green Setting (Gmax), s	4.0	94.9	7.5	18.6	4.0	94.9		* 33
Max Q Clear Time (g_c+I1), s	2.1	96.9	2.4	20.6	2.3	17.4		2.4
Green Ext Time (p_c), s	0.0	0.0	0.0	0.0	0.0	7.2		0.0

Intersection Summary	
HCM 6th Ctrl Delay	51.4
HCM 6th LOS	D

Notes

* HCM 6th computational engine requires equal clearance times for the phases crossing the barrier.

Intersection	
Int Delay, s/veh	2.8

Movement	EBL	EBT	WBT	WBR	SBL	SBR
Lane Configurations						
Traffic Vol, veh/h	46	105	110	11	7	43
Future Vol, veh/h	46	105	110	11	7	43
Conflicting Peds, #/hr	0	0	0	0	0	0
Sign Control	Free	Free	Free	Free	Stop	Stop
RT Channelized	-	None	-	None	-	None
Storage Length	450	-	-	-	0	-
Veh in Median Storage, #	-	0	0	-	0	-
Grade, %	-	0	0	-	0	-
Peak Hour Factor	82	82	82	82	82	82
Heavy Vehicles, %	86	86	77	77	54	54
Mvmt Flow	56	128	134	13	9	52

Major/Minor	Major1		Major2		Minor2	
Conflicting Flow All	147	0	-	0	381	141
Stage 1	-	-	-	-	141	-
Stage 2	-	-	-	-	240	-
Critical Hdwy	4.96	-	-	-	6.94	6.74
Critical Hdwy Stg 1	-	-	-	-	5.94	-
Critical Hdwy Stg 2	-	-	-	-	5.94	-
Follow-up Hdwy	2.974	-	-	-	3.986	3.786
Pot Cap-1 Maneuver	1050	-	-	-	531	786
Stage 1	-	-	-	-	773	-
Stage 2	-	-	-	-	692	-
Platoon blocked, %		-	-	-		
Mov Cap-1 Maneuver	1050	-	-	-	503	786
Mov Cap-2 Maneuver	-	-	-	-	503	-
Stage 1	-	-	-	-	732	-
Stage 2	-	-	-	-	692	-

Approach	EB	WB	SB
HCM Control Delay, s	2.6	0	10.4
HCM LOS			B

Minor Lane/Major Mvmt	EBL	EBT	WBT	WBR	SBLn1
Capacity (veh/h)	1050	-	-	-	729
HCM Lane V/C Ratio	0.053	-	-	-	0.084
HCM Control Delay (s)	8.6	-	-	-	10.4
HCM Lane LOS	A	-	-	-	B
HCM 95th %tile Q(veh)	0.2	-	-	-	0.3

Intersection	
Int Delay, s/veh	4.4

Movement	EBL	EBT	EBR	WBL	WBT	WBR	NBL	NBT	NBR	SBL	SBT	SBR
Lane Configurations												
Traffic Vol, veh/h	35	136	50	15	128	5	55	0	10	5	10	35
Future Vol, veh/h	35	136	50	15	128	5	55	0	10	5	10	35
Conflicting Peds, #/hr	0	0	0	0	0	0	0	0	0	0	0	0
Sign Control	Free	Free	Free	Free	Free	Free	Stop	Stop	Stop	Stop	Stop	Stop
RT Channelized	-	-	None	-	-	None	-	-	None	-	-	None
Storage Length	-	-	-	-	-	-	-	-	-	-	-	-
Veh in Median Storage, #	-	0	-	-	0	-	-	0	-	-	0	-
Grade, %	-	0	-	-	0	-	-	0	-	-	0	-
Peak Hour Factor	82	82	82	82	82	82	82	82	82	82	82	82
Heavy Vehicles, %	36	36	36	30	30	30	35	35	35	91	91	91
Mvmt Flow	43	166	61	18	156	6	67	0	12	6	12	43

Major/Minor	Major1			Major2			Minor1			Minor2		
Conflicting Flow All	162	0	0	227	0	0	506	481	114	364	508	159
Stage 1	-	-	-	-	-	-	283	283	-	195	195	-
Stage 2	-	-	-	-	-	-	223	198	-	169	313	-
Critical Hdwy	4.64	-	-	4.55	-	-	7.825	7.025	7.425	8.665	7.865	7.565
Critical Hdwy Stg 1	-	-	-	-	-	-	7.025	6.025	-	7.465	6.865	-
Critical Hdwy Stg 2	-	-	-	-	-	-	6.625	6.025	-	7.865	6.865	-
Follow-up Hdwy	2.542	-	-	2.485	-	-	3.8325	4.3325	3.6325	4.3645	4.8645	4.1645
Pot Cap-1 Maneuver	1216	-	-	1175	-	-	404	428	829	425	337	678
Stage 1	-	-	-	-	-	-	626	611	-	618	580	-
Stage 2	-	-	-	-	-	-	700	670	-	631	500	-
Platoon blocked, %		-	-		-	-						
Mov Cap-1 Maneuver	1216	-	-	1175	-	-	351	404	829	400	318	678
Mov Cap-2 Maneuver	-	-	-	-	-	-	351	404	-	400	318	-
Stage 1	-	-	-	-	-	-	600	586	-	593	570	-
Stage 2	-	-	-	-	-	-	631	659	-	596	480	-

Approach	EB	WB	NB	SB
HCM Control Delay, s	1.3	0.8	16.8	12.8
HCM LOS			C	B

Minor Lane/Major Mvmt	NBLn1	EBL	EBT	EBR	WBL	WBT	WBR	SBLn1
Capacity (veh/h)	385	1216	-	-	1175	-	-	523
HCM Lane V/C Ratio	0.206	0.035	-	-	0.016	-	-	0.117
HCM Control Delay (s)	16.8	8.1	0.1	-	8.1	0	-	12.8
HCM Lane LOS	C	A	A	-	A	A	-	B
HCM 95th %tile Q(veh)	0.8	0.1	-	-	0	-	-	0.4

Movement	WBL	WBR	NBT	NBR	SBL	SBT
Lane Configurations						
Traffic Volume (veh/h)	78	145	440	102	129	450
Future Volume (veh/h)	78	145	440	102	129	450
Initial Q (Qb), veh	0	0	0	0	0	0
Ped-Bike Adj(A_pbT)	1.00	1.00		1.00	1.00	
Parking Bus, Adj	1.00	1.00	1.00	1.00	1.00	1.00
Work Zone On Approach	No		No			No
Adj Sat Flow, veh/h/ln	1233	1233	1796	1796	1678	1678
Adj Flow Rate, veh/h	85	158	478	111	140	489
Peak Hour Factor	0.92	0.92	0.92	0.92	0.92	0.92
Percent Heavy Veh, %	45	45	7	7	15	15
Cap, veh/h	95	177	530	123	268	893
Arrive On Green	0.25	0.25	0.38	0.38	0.07	0.53
Sat Flow, veh/h	379	704	1410	327	1598	1678
Grp Volume(v), veh/h	244	0	0	589	140	489
Grp Sat Flow(s),veh/h/ln	1087	0	0	1737	1598	1678
Q Serve(g_s), s	14.4	0.0	0.0	21.3	3.3	12.8
Cycle Q Clear(g_c), s	14.4	0.0	0.0	21.3	3.3	12.8
Prop In Lane	0.35	0.65		0.19	1.00	
Lane Grp Cap(c), veh/h	273	0	0	653	268	893
V/C Ratio(X)	0.89	0.00	0.00	0.90	0.52	0.55
Avail Cap(c_a), veh/h	387	0	0	705	272	931
HCM Platoon Ratio	1.00	1.00	1.00	1.00	1.00	1.00
Upstream Filter(I)	1.00	0.00	0.00	1.00	1.00	1.00
Uniform Delay (d), s/veh	24.0	0.0	0.0	19.6	14.8	10.3
Incr Delay (d2), s/veh	17.1	0.0	0.0	14.7	2.4	0.8
Initial Q Delay(d3),s/veh	0.0	0.0	0.0	0.0	0.0	0.0
%ile BackOfQ(50%),veh/ln	4.7	0.0	0.0	10.4	1.2	4.2
Unsig. Movement Delay, s/veh						
LnGrp Delay(d),s/veh	41.2	0.0	0.0	34.3	17.2	11.1
LnGrp LOS	D	A	A	C	B	B
Approach Vol, veh/h	244		589			629
Approach Delay, s/veh	41.2		34.3			12.5
Approach LOS	D		C			B

Timer - Assigned Phs	1	2				6	8
Phs Duration (G+Y+Rc), s	10.4	33.1				43.5	23.0
Change Period (Y+Rc), s	5.5	* 8.1				* 8.1	6.3
Max Green Setting (Gmax), s	5.1	* 27				* 37	23.7
Max Q Clear Time (g_c+I1), s	5.3	23.3				14.8	16.4
Green Ext Time (p_c), s	0.0	1.7				4.5	0.5

Intersection Summary	
HCM 6th Ctrl Delay	26.1
HCM 6th LOS	C

Notes

User approved pedestrian interval to be less than phase max green.

User approved volume balancing among the lanes for turning movement.

* HCM 6th computational engine requires equal clearance times for the phases crossing the barrier.

Movement	EBL	EBR	NBL	NBT	SBT	SBR
Lane Configurations						
Traffic Volume (vph)	70	71	91	436	375	90
Future Volume (vph)	70	71	91	436	375	90
Ideal Flow (vphpl)	1900	1900	1900	1900	1900	1900
Total Lost time (s)	5.0	5.0	6.5	6.5	6.5	6.5
Lane Util. Factor	1.00	1.00	1.00	1.00	1.00	1.00
Frt	1.00	0.85	1.00	1.00	1.00	0.85
Flt Protected	0.95	1.00	0.95	1.00	1.00	1.00
Satd. Flow (prot)	1671	1495	1719	1810	1792	1524
Flt Permitted	0.95	1.00	0.39	1.00	1.00	1.00
Satd. Flow (perm)	1671	1495	699	1810	1792	1524
Peak-hour factor, PHF	0.96	0.96	0.96	0.96	0.96	0.96
Adj. Flow (vph)	73	74	95	454	391	94
RTOR Reduction (vph)	0	66	0	0	0	44
Lane Group Flow (vph)	73	8	95	454	391	51
Heavy Vehicles (%)	8%	8%	5%	5%	6%	6%
Turn Type	custom	custom	pm+pt	NA	NA	Perm
Protected Phases	3	3	5	2	6	
Permitted Phases	4	4	2			6
Actuated Green, G (s)	5.5	5.5	35.0	35.0	23.0	23.0
Effective Green, g (s)	5.5	5.5	35.0	35.0	23.0	23.0
Actuated g/C Ratio	0.11	0.11	0.67	0.67	0.44	0.44
Clearance Time (s)	5.0	5.0	6.5	6.5	6.5	6.5
Vehicle Extension (s)	2.0	2.0	2.0	5.0	5.0	5.0
Lane Grp Cap (vph)	176	158	578	1218	792	674
v/s Ratio Prot	c0.04	0.01	0.02	c0.25	c0.22	
v/s Ratio Perm			0.09			0.03
v/c Ratio	0.41	0.05	0.16	0.37	0.49	0.07
Uniform Delay, d1	21.7	20.9	3.6	3.7	10.3	8.4
Progression Factor	1.00	1.00	1.00	1.00	1.00	1.00
Incremental Delay, d2	0.6	0.0	0.0	0.4	1.0	0.1
Delay (s)	22.3	20.9	3.7	4.1	11.4	8.5
Level of Service	C	C	A	A	B	A
Approach Delay (s)	21.6			4.0	10.8	
Approach LOS	C			A	B	

Intersection Summary			
HCM 2000 Control Delay	9.0	HCM 2000 Level of Service	A
HCM 2000 Volume to Capacity ratio	0.55		
Actuated Cycle Length (s)	52.0	Sum of lost time (s)	21.0
Intersection Capacity Utilization	43.9%	ICU Level of Service	A
Analysis Period (min)	15		
c Critical Lane Group			

Movement	EBL	EBR	NBL	NBT	SBT	SBR
Lane Configurations						
Traffic Volume (vph)	177	10	10	350	300	146
Future Volume (vph)	177	10	10	350	300	146
Ideal Flow (vphpl)	1900	1900	1900	1900	1900	1900
Total Lost time (s)	5.0	5.0	6.0	6.0	6.0	5.0
Lane Util. Factor	1.00	1.00	1.00	1.00	1.00	1.00
Frpb, ped/bikes	1.00	1.00	1.00	1.00	1.00	0.99
Flpb, ped/bikes	1.00	1.00	1.00	1.00	1.00	1.00
Frt	1.00	0.85	1.00	1.00	1.00	0.85
Flt Protected	0.95	1.00	0.95	1.00	1.00	1.00
Satd. Flow (prot)	1671	1495	1736	1827	1792	1506
Flt Permitted	0.95	1.00	0.39	1.00	1.00	1.00
Satd. Flow (perm)	1671	1495	706	1827	1792	1506
Peak-hour factor, PHF	0.95	0.95	0.95	0.95	0.95	0.95
Adj. Flow (vph)	186	11	11	368	316	154
RTOR Reduction (vph)	0	8	0	0	0	68
Lane Group Flow (vph)	186	3	11	368	316	86
Confl. Bikes (#/hr)						1
Heavy Vehicles (%)	8%	8%	4%	4%	6%	6%
Turn Type	custom	custom	pm+pt	NA	NA	pm+ov
Protected Phases	3	3	5	2	6	3
Permitted Phases	4	4	2			6
Actuated Green, G (s)	9.9	9.9	19.4	19.4	12.7	22.6
Effective Green, g (s)	9.9	9.9	19.4	19.4	12.7	22.6
Actuated g/C Ratio	0.25	0.25	0.48	0.48	0.32	0.56
Clearance Time (s)	5.0	5.0	6.0	6.0	6.0	5.0
Vehicle Extension (s)	2.0	2.0	2.0	2.0	2.0	2.0
Lane Grp Cap (vph)	410	367	357	879	564	844
v/s Ratio Prot	c0.11	0.00	0.00	c0.20	c0.18	0.03
v/s Ratio Perm			0.01			0.03
v/c Ratio	0.45	0.01	0.03	0.42	0.56	0.10
Uniform Delay, d1	12.9	11.5	5.9	6.8	11.5	4.1
Progression Factor	1.00	1.00	1.00	1.00	1.00	1.00
Incremental Delay, d2	0.3	0.0	0.0	0.1	0.8	0.0
Delay (s)	13.2	11.5	5.9	6.9	12.2	4.1
Level of Service	B	B	A	A	B	A
Approach Delay (s)	13.1			6.9	9.6	
Approach LOS	B			A	A	

Intersection Summary			
HCM 2000 Control Delay	9.3	HCM 2000 Level of Service	A
HCM 2000 Volume to Capacity ratio	0.66		
Actuated Cycle Length (s)	40.3	Sum of lost time (s)	20.0
Intersection Capacity Utilization	37.4%	ICU Level of Service	A
Analysis Period (min)	15		

c Critical Lane Group

Intersection	
Int Delay, s/veh	1.1

Movement	EBL	EBT	EBR	WBL	WBT	WBR	NBL	NBT	NBR	SBL	SBT	SBR
Lane Configurations												
Traffic Vol, veh/h	0	0	0	25	0	15	20	235	0	0	105	170
Future Vol, veh/h	0	0	0	25	0	15	20	235	0	0	105	170
Conflicting Peds, #/hr	0	0	0	0	0	0	0	0	0	0	0	0
Sign Control	Stop	Stop	Stop	Stop	Stop	Stop	Free	Free	Free	Free	Free	Free
RT Channelized	-	-	None	-	-	None	-	-	None	-	-	None
Storage Length	-	-	-	-	-	500	175	-	-	-	-	375
Veh in Median Storage, #	-	1	-	-	0	-	-	0	-	-	0	-
Grade, %	-	0	-	-	0	-	-	0	-	-	0	-
Peak Hour Factor	92	92	92	92	92	92	92	92	92	92	92	92
Heavy Vehicles, %	0	0	0	7	7	7	6	6	6	4	4	4
Mvmt Flow	0	0	0	27	0	16	22	255	0	0	114	185

Major/Minor	Minor1		Major1			Major2			
Conflicting Flow All	506	598	255	299	0	-	-	-	0
Stage 1	299	299	-	-	-	-	-	-	-
Stage 2	207	299	-	-	-	-	-	-	-
Critical Hdwy	6.47	6.57	6.27	4.16	-	-	-	-	-
Critical Hdwy Stg 1	5.47	5.57	-	-	-	-	-	-	-
Critical Hdwy Stg 2	5.47	5.57	-	-	-	-	-	-	-
Follow-up Hdwy	3.563	4.063	3.363	2.254	-	-	-	-	-
Pot Cap-1 Maneuver	517	409	772	1240	-	0	0	-	-
Stage 1	741	657	-	-	-	0	0	-	-
Stage 2	816	657	-	-	-	0	0	-	-
Platoon blocked, %					-			-	-
Mov Cap-1 Maneuver	508	0	772	1240	-	-	-	-	-
Mov Cap-2 Maneuver	508	0	-	-	-	-	-	-	-
Stage 1	728	0	-	-	-	-	-	-	-
Stage 2	816	0	-	-	-	-	-	-	-

Approach	WB	NB	SB
HCM Control Delay, s	11.5	0.6	0
HCM LOS	B		

Minor Lane/Major Mvmt	NBL	NBT	WBLn1	WBLn2	SBT	SBR
Capacity (veh/h)	1240	-	508	772	-	-
HCM Lane V/C Ratio	0.018	-	0.053	0.021	-	-
HCM Control Delay (s)	8	-	12.5	9.8	-	-
HCM Lane LOS	A	-	B	A	-	-
HCM 95th %tile Q(veh)	0.1	-	0.2	0.1	-	-

Movement	EBL	EBR	NBL	NBT	SBT	SBR
Lane Configurations						
Traffic Volume (veh/h)	160	10	25	115	120	15
Future Volume (veh/h)	160	10	25	115	120	15
Initial Q (Qb), veh	0	0	0	0	0	0
Ped-Bike Adj(A_pbT)	1.00	1.00	1.00			0.98
Parking Bus, Adj	1.00	1.00	1.00	1.00	1.00	1.00
Work Zone On Approach	No			No	No	
Adj Sat Flow, veh/h/ln	1841	1841	1811	1811	1752	1752
Adj Flow Rate, veh/h	184	11	29	132	138	17
Peak Hour Factor	0.87	0.87	0.87	0.87	0.87	0.87
Percent Heavy Veh, %	4	4	6	6	10	10
Cap, veh/h	390	347	231	269	305	38
Arrive On Green	0.22	0.22	0.20	0.20	0.20	0.20
Sat Flow, veh/h	1753	1560	180	1345	1525	188
Grp Volume(v), veh/h	184	11	161	0	0	155
Grp Sat Flow(s),veh/h/ln	1753	1560	1524	0	0	1713
Q Serve(g_s), s	2.0	0.1	0.5	0.0	0.0	1.7
Cycle Q Clear(g_c), s	2.0	0.1	2.3	0.0	0.0	1.7
Prop In Lane	1.00	1.00	0.18			0.11
Lane Grp Cap(c), veh/h	390	347	500	0	0	343
V/C Ratio(X)	0.47	0.03	0.32	0.00	0.00	0.45
Avail Cap(c_a), veh/h	3914	3483	4626	0	0	2647
HCM Platoon Ratio	1.00	1.00	1.00	1.00	1.00	1.00
Upstream Filter(I)	1.00	1.00	1.00	0.00	0.00	1.00
Uniform Delay (d), s/veh	7.4	6.6	7.8	0.0	0.0	7.7
Incr Delay (d2), s/veh	0.9	0.0	0.8	0.0	0.0	2.0
Initial Q Delay(d3),s/veh	0.0	0.0	0.0	0.0	0.0	0.0
%ile BackOfQ(50%),veh/ln	0.5	0.0	0.5	0.0	0.0	0.5
Unsig. Movement Delay, s/veh						
LnGrp Delay(d),s/veh	8.3	6.7	8.6	0.0	0.0	9.7
LnGrp LOS	A	A	A	A	A	A
Approach Vol, veh/h	195			161	155	
Approach Delay, s/veh	8.2			8.6	9.7	
Approach LOS	A			A	A	

Timer - Assigned Phs		2		4		6
Phs Duration (G+Y+Rc), s		10.7		11.2		10.7
Change Period (Y+Rc), s		6.3		6.3		6.3
Max Green Setting (Gmax), s		58.7		48.7		33.7
Max Q Clear Time (g_c+I1), s		4.3		4.0		3.7
Green Ext Time (p_c), s		2.1		0.6		1.7

Intersection Summary	
HCM 6th Ctrl Delay	8.7
HCM 6th LOS	A

Movement	EBL	EBT	EBR	WBL	WBT	WBR	NBL	NBT	NBR	SBL	SBT	SBR
Lane Configurations												
Traffic Volume (veh/h)	100	10	15	5	0	10	15	575	10	15	559	95
Future Volume (veh/h)	100	10	15	5	0	10	15	575	10	15	559	95
Initial Q (Qb), veh	0	0	0	0	0	0	0	0	0	0	0	0
Ped-Bike Adj(A_pbT)	1.00		0.98	1.00		1.00	1.00		0.98	1.00		1.00
Parking Bus, Adj	1.00	1.00	1.00	1.00	1.00	1.00	1.00	1.00	1.00	1.00	1.00	1.00
Work Zone On Approach		No			No			No			No	
Adj Sat Flow, veh/h/ln	1856	1856	1856	1559	1559	1559	1663	1663	1663	1678	1678	1678
Adj Flow Rate, veh/h	105	11	16	5	0	11	16	605	11	16	588	100
Peak Hour Factor	0.95	0.95	0.95	0.95	0.95	0.95	0.95	0.95	0.95	0.95	0.95	0.95
Percent Heavy Veh, %	3	3	3	23	23	23	16	16	16	15	15	15
Cap, veh/h	232	17	21	303	0	273	266	788	14	258	812	689
Arrive On Green	0.12	0.12	0.12	0.00	0.00	0.21	0.01	0.48	0.48	0.01	0.48	0.48
Sat Flow, veh/h	1125	145	175	1485	0	1321	1584	1627	30	1598	1678	1422
Grp Volume(v), veh/h	132	0	0	5	0	11	16	0	616	16	588	100
Grp Sat Flow(s),veh/h/ln	1445	0	0	1485	0	1321	1584	0	1657	1598	1678	1422
Q Serve(g_s), s	5.7	0.0	0.0	0.2	0.0	0.4	0.3	0.0	20.0	0.3	18.2	2.6
Cycle Q Clear(g_c), s	5.8	0.0	0.0	0.2	0.0	0.4	0.3	0.0	20.0	0.3	18.2	2.6
Prop In Lane	0.80		0.12	1.00		1.00	1.00		0.02	1.00		1.00
Lane Grp Cap(c), veh/h	270	0	0	303	0	273	266	0	802	258	812	689
V/C Ratio(X)	0.49	0.00	0.00	0.02	0.00	0.04	0.06	0.00	0.77	0.06	0.72	0.15
Avail Cap(c_a), veh/h	497	0	0	626	0	890	841	0	1465	715	1355	1149
HCM Platoon Ratio	1.00	1.00	1.00	1.00	1.00	1.00	1.00	1.00	1.00	1.00	1.00	1.00
Upstream Filter(I)	1.00	0.00	0.00	1.00	0.00	1.00	1.00	0.00	1.00	1.00	1.00	1.00
Uniform Delay (d), s/veh	28.0	0.0	0.0	23.6	0.0	20.8	11.0	0.0	13.9	11.5	13.4	9.4
Incr Delay (d2), s/veh	2.0	0.0	0.0	0.0	0.0	0.1	0.1	0.0	3.3	0.1	2.6	0.2
Initial Q Delay(d3),s/veh	0.0	0.0	0.0	0.0	0.0	0.0	0.0	0.0	0.0	0.0	0.0	0.0
%ile BackOfQ(50%),veh/ln	2.1	0.0	0.0	0.1	0.0	0.1	0.1	0.0	7.1	0.1	6.5	0.7
Unsig. Movement Delay, s/veh												
LnGrp Delay(d),s/veh	29.9	0.0	0.0	23.6	0.0	20.9	11.1	0.0	17.2	11.6	16.0	9.6
LnGrp LOS	C	A	A	C	A	C	B	A	B	B	B	A
Approach Vol, veh/h		132			16			632			704	
Approach Delay, s/veh		29.9			21.7			17.0			15.0	
Approach LOS		C			C			B			B	

Timer - Assigned Phs	1	2	3	4	5	6		8
Phs Duration (G+Y+Rc), s	6.3	38.8	5.8	14.7	6.3	38.8		20.4
Change Period (Y+Rc), s	5.5	7.1	5.5	6.9	5.5	7.1		* 6.9
Max Green Setting (Gmax), s	19.5	57.9	14.5	18.1	24.5	52.9		* 44
Max Q Clear Time (g_c+I1), s	2.3	22.0	2.2	7.8	2.3	20.2		2.4
Green Ext Time (p_c), s	0.0	9.7	0.0	0.6	0.0	9.8		0.0

Intersection Summary	
HCM 6th Ctrl Delay	17.3
HCM 6th LOS	B

Notes

* HCM 6th computational engine requires equal clearance times for the phases crossing the barrier.

Intersection	
Int Delay, s/veh	3

Movement	EBL	EBT	WBT	WBR	SBL	SBR
Lane Configurations						
Traffic Vol, veh/h	30	125	210	6	17	86
Future Vol, veh/h	30	125	210	6	17	86
Conflicting Peds, #/hr	0	0	0	0	0	0
Sign Control	Free	Free	Free	Free	Stop	Stop
RT Channelized	-	None	-	None	-	None
Storage Length	450	-	-	-	0	-
Veh in Median Storage, #	-	0	0	-	0	-
Grade, %	-	0	0	-	0	-
Peak Hour Factor	82	82	82	82	82	82
Heavy Vehicles, %	8	8	2	2	15	15
Mvmt Flow	37	152	256	7	21	105

Major/Minor	Major1		Major2		Minor2	
Conflicting Flow All	263	0	-	0	486	260
Stage 1	-	-	-	-	260	-
Stage 2	-	-	-	-	226	-
Critical Hdwy	4.18	-	-	-	6.55	6.35
Critical Hdwy Stg 1	-	-	-	-	5.55	-
Critical Hdwy Stg 2	-	-	-	-	5.55	-
Follow-up Hdwy	2.272	-	-	-	3.635	3.435
Pot Cap-1 Maneuver	1267	-	-	-	518	748
Stage 1	-	-	-	-	754	-
Stage 2	-	-	-	-	782	-
Platoon blocked, %		-	-	-		
Mov Cap-1 Maneuver	1267	-	-	-	503	748
Mov Cap-2 Maneuver	-	-	-	-	503	-
Stage 1	-	-	-	-	732	-
Stage 2	-	-	-	-	782	-

Approach	EB	WB	SB
HCM Control Delay, s	1.5	0	11.4
HCM LOS			B

Minor Lane/Major Mvmt	EBL	EBT	WBT	WBR	SBLn1
Capacity (veh/h)	1267	-	-	-	692
HCM Lane V/C Ratio	0.029	-	-	-	0.182
HCM Control Delay (s)	7.9	-	-	-	11.4
HCM Lane LOS	A	-	-	-	B
HCM 95th %tile Q(veh)	0.1	-	-	-	0.7

Intersection	
Int Delay, s/veh	2.9

Movement	EBL	EBT	EBR	WBL	WBT	WBR	NBL	NBT	NBR	SBL	SBT	SBR
Lane Configurations												
Traffic Vol, veh/h	5	140	95	95	206	5	30	0	10	5	5	10
Future Vol, veh/h	5	140	95	95	206	5	30	0	10	5	5	10
Conflicting Peds, #/hr	0	0	0	0	0	0	0	0	0	0	0	0
Sign Control	Free	Free	Free	Free	Free	Free	Stop	Stop	Stop	Stop	Stop	Stop
RT Channelized	-	-	None	-	-	None	-	-	None	-	-	None
Storage Length	-	-	-	-	-	-	-	-	-	-	-	-
Veh in Median Storage, #	-	0	-	-	0	-	-	0	-	-	0	-
Grade, %	-	0	-	-	0	-	-	0	-	-	0	-
Peak Hour Factor	89	89	89	89	89	89	89	89	89	89	89	89
Heavy Vehicles, %	9	9	9	7	7	7	0	0	0	53	53	53
Mvmt Flow	6	157	107	107	231	6	34	0	11	6	6	11

Major/Minor	Major1			Major2			Minor1			Minor2		
Conflicting Flow All	237	0	0	264	0	0	680	674	132	539	724	234
Stage 1	-	-	-	-	-	-	223	223	-	448	448	-
Stage 2	-	-	-	-	-	-	457	451	-	91	276	-
Critical Hdwy	4.235	-	-	4.205	-	-	7.3	6.5	6.9	8.095	7.295	6.995
Critical Hdwy Stg 1	-	-	-	-	-	-	6.5	5.5	-	6.895	6.295	-
Critical Hdwy Stg 2	-	-	-	-	-	-	6.1	5.5	-	7.295	6.295	-
Follow-up Hdwy	2.2855	-	-	2.2665	-	-	3.5	4	3.3	4.0035	4.5035	3.8035
Pot Cap-1 Maneuver	1284	-	-	1267	-	-	354	379	899	356	280	678
Stage 1	-	-	-	-	-	-	765	723	-	484	477	-
Stage 2	-	-	-	-	-	-	587	574	-	786	583	-
Platoon blocked, %		-	-		-	-						
Mov Cap-1 Maneuver	1284	-	-	1267	-	-	315	340	899	324	251	678
Mov Cap-2 Maneuver	-	-	-	-	-	-	315	340	-	324	251	-
Stage 1	-	-	-	-	-	-	760	719	-	481	431	-
Stage 2	-	-	-	-	-	-	514	518	-	772	580	-

Approach	EB	WB	NB	SB
HCM Control Delay, s	0.2	2.5	15.9	14.6
HCM LOS			C	B

Minor Lane/Major Mvmt	NBLn1	EBL	EBT	EBR	WBL	WBT	WBR	SBLn1
Capacity (veh/h)	376	1284	-	-	1267	-	-	399
HCM Lane V/C Ratio	0.12	0.004	-	-	0.084	-	-	0.056
HCM Control Delay (s)	15.9	7.8	0	-	8.1	0	-	14.6
HCM Lane LOS	C	A	A	-	A	A	-	B
HCM 95th %tile Q(veh)	0.4	0	-	-	0.3	-	-	0.2

Movement	WBL	WBR	NBT	NBR	SBL	SBT
Lane Configurations						
Traffic Volume (veh/h)	107	129	450	69	186	1250
Future Volume (veh/h)	107	129	450	69	186	1250
Initial Q (Qb), veh	0	0	0	0	0	0
Ped-Bike Adj(A_pbT)	1.00	1.00		1.00	1.00	
Parking Bus, Adj	1.00	1.00	1.00	1.00	1.00	1.00
Work Zone On Approach	No		No			No
Adj Sat Flow, veh/h/ln	1781	1781	1826	1826	1885	1885
Adj Flow Rate, veh/h	115	139	484	74	200	1344
Peak Hour Factor	0.93	0.93	0.93	0.93	0.93	0.93
Percent Heavy Veh, %	8	8	5	5	1	1
Cap, veh/h	114	137	1024	157	570	1407
Arrive On Green	0.16	0.16	0.66	0.66	0.05	0.75
Sat Flow, veh/h	717	867	1547	236	1795	1885
Grp Volume(v), veh/h	255	0	0	558	200	1344
Grp Sat Flow(s),veh/h/ln	1590	0	0	1783	1795	1885
Q Serve(g_s), s	24.0	0.0	0.0	23.3	5.3	95.4
Cycle Q Clear(g_c), s	24.0	0.0	0.0	23.3	5.3	95.4
Prop In Lane	0.45	0.55		0.13	1.00	
Lane Grp Cap(c), veh/h	252	0	0	1181	570	1407
V/C Ratio(X)	1.01	0.00	0.00	0.47	0.35	0.96
Avail Cap(c_a), veh/h	252	0	0	1232	572	1452
HCM Platoon Ratio	1.00	1.00	1.00	1.00	1.00	1.00
Upstream Filter(I)	1.00	0.00	0.00	1.00	1.00	1.00
Uniform Delay (d), s/veh	63.7	0.0	0.0	12.6	9.3	17.0
Incr Delay (d2), s/veh	59.8	0.0	0.0	0.4	0.5	14.3
Initial Q Delay(d3),s/veh	0.0	0.0	0.0	0.0	0.0	0.0
%ile BackOfQ(50%),veh/ln	13.9	0.0	0.0	9.3	2.0	42.0
Unsig. Movement Delay, s/veh						
LnGrp Delay(d),s/veh	123.5	0.0	0.0	13.0	9.8	31.3
LnGrp LOS	F	A	A	B	A	C
Approach Vol, veh/h	255		558			1544
Approach Delay, s/veh	123.5		13.0			28.5
Approach LOS	F		B			C

Timer - Assigned Phs	1	2				6	8
Phs Duration (G+Y+Rc), s	12.8	108.3				121.1	30.3
Change Period (Y+Rc), s	5.5	* 8.1				* 8.1	6.3
Max Green Setting (Gmax), s	7.5	* 1E2				* 1.2E2	24.0
Max Q Clear Time (g_c+I1), s	7.3	25.3				97.4	26.0
Green Ext Time (p_c), s	0.0	6.7				15.6	0.0

Intersection Summary	
HCM 6th Ctrl Delay	35.1
HCM 6th LOS	D

Notes

User approved pedestrian interval to be less than phase max green.

User approved volume balancing among the lanes for turning movement.

* HCM 6th computational engine requires equal clearance times for the phases crossing the barrier.

Movement	EBL	EBR	NBL	NBT	SBT	SBR
Lane Configurations						
Traffic Volume (vph)	70	275	90	342	1286	100
Future Volume (vph)	70	275	90	342	1286	100
Ideal Flow (vphpl)	1900	1900	1900	1900	1900	1900
Total Lost time (s)	5.0	5.0	6.5	6.5	6.5	6.5
Lane Util. Factor	1.00	1.00	1.00	1.00	1.00	1.00
Frt	1.00	0.85	1.00	1.00	1.00	0.85
Flt Protected	0.95	1.00	0.95	1.00	1.00	1.00
Satd. Flow (prot)	1752	1568	1787	1881	1881	1599
Flt Permitted	0.95	1.00	0.02	1.00	1.00	1.00
Satd. Flow (perm)	1752	1568	42	1881	1881	1599
Peak-hour factor, PHF	0.94	0.94	0.94	0.94	0.94	0.94
Adj. Flow (vph)	74	293	96	364	1368	106
RTOR Reduction (vph)	0	91	0	0	0	6
Lane Group Flow (vph)	74	202	96	364	1368	100
Heavy Vehicles (%)	3%	3%	1%	1%	1%	1%
Turn Type	custom	custom	pm+pt	NA	NA	Perm
Protected Phases	3	3	5	2	6	
Permitted Phases	4	4	2			6
Actuated Green, G (s)	34.9	34.9	193.6	193.6	171.4	171.4
Effective Green, g (s)	34.9	34.9	193.6	193.6	171.4	171.4
Actuated g/C Ratio	0.15	0.15	0.81	0.81	0.71	0.71
Clearance Time (s)	5.0	5.0	6.5	6.5	6.5	6.5
Vehicle Extension (s)	2.0	2.0	2.0	5.0	5.0	5.0
Lane Grp Cap (vph)	254	228	148	1517	1343	1141
v/s Ratio Prot	0.04	c0.13	c0.04	0.19	c0.73	
v/s Ratio Perm			0.48			0.06
v/c Ratio	0.29	0.88	0.65	0.24	1.02	0.09
Uniform Delay, d1	91.5	100.6	91.5	5.6	34.3	10.5
Progression Factor	1.00	1.00	0.96	1.61	1.00	1.00
Incremental Delay, d2	0.2	30.0	6.9	0.4	29.3	0.2
Delay (s)	91.7	130.5	94.8	9.3	63.6	10.6
Level of Service	F	F	F	A	E	B
Approach Delay (s)	122.7			27.1	59.8	
Approach LOS	F			C	E	

Intersection Summary			
HCM 2000 Control Delay	63.3	HCM 2000 Level of Service	E
HCM 2000 Volume to Capacity ratio	0.98		
Actuated Cycle Length (s)	240.0	Sum of lost time (s)	21.0
Intersection Capacity Utilization	94.3%	ICU Level of Service	F
Analysis Period (min)	15		
c Critical Lane Group			

Movement	EBL	EBR	NBL	NBT	SBT	SBR
Lane Configurations						
Traffic Volume (vph)	127	20	10	305	1315	266
Future Volume (vph)	127	20	10	305	1315	266
Ideal Flow (vphpl)	1900	1900	1900	1900	1900	1900
Total Lost time (s)	5.0	5.0	6.0	6.0	6.0	5.0
Lane Util. Factor	1.00	1.00	1.00	1.00	1.00	1.00
Frt	1.00	0.85	1.00	1.00	1.00	0.85
Flt Protected	0.95	1.00	0.95	1.00	1.00	1.00
Satd. Flow (prot)	1787	1599	1787	1881	1881	1599
Flt Permitted	0.95	1.00	0.04	1.00	1.00	1.00
Satd. Flow (perm)	1787	1599	80	1881	1881	1599
Peak-hour factor, PHF	0.91	0.91	0.91	0.91	0.91	0.91
Adj. Flow (vph)	140	22	11	335	1445	292
RTOR Reduction (vph)	0	19	0	0	0	23
Lane Group Flow (vph)	140	3	11	335	1445	269
Heavy Vehicles (%)	1%	1%	1%	1%	1%	1%
Turn Type	custom	custom	pm+pt	NA	NA	pm+ov
Protected Phases	3	3	5	2	6	3
Permitted Phases	4	4	2			6
Actuated Green, G (s)	13.8	13.8	95.2	95.2	88.2	102.0
Effective Green, g (s)	13.8	13.8	95.2	95.2	88.2	102.0
Actuated g/C Ratio	0.12	0.12	0.79	0.79	0.74	0.85
Clearance Time (s)	5.0	5.0	6.0	6.0	6.0	5.0
Vehicle Extension (s)	2.0	2.0	2.0	2.0	2.0	2.0
Lane Grp Cap (vph)	205	183	77	1492	1382	1359
v/s Ratio Prot	c0.08	0.00	0.00	c0.18	c0.77	0.02
v/s Ratio Perm			0.11			0.15
v/c Ratio	0.68	0.01	0.14	0.22	1.05	0.20
Uniform Delay, d1	51.0	47.1	36.7	3.1	15.9	1.6
Progression Factor	1.00	1.00	1.00	1.00	1.51	1.11
Incremental Delay, d2	7.3	0.0	0.3	0.3	28.3	0.0
Delay (s)	58.3	47.1	37.0	3.5	52.4	1.8
Level of Service	E	D	D	A	D	A
Approach Delay (s)	56.7			4.5	43.9	
Approach LOS	E			A	D	

Intersection Summary			
HCM 2000 Control Delay	38.7	HCM 2000 Level of Service	D
HCM 2000 Volume to Capacity ratio	1.03		
Actuated Cycle Length (s)	120.0	Sum of lost time (s)	20.0
Intersection Capacity Utilization	85.4%	ICU Level of Service	E
Analysis Period (min)	15		
c Critical Lane Group			

Intersection	
Int Delay, s/veh	20.8

Movement	EBL	EBT	EBR	WBL	WBT	WBR	NBL	NBT	NBR	SBL	SBT	SBR
Lane Configurations												
Traffic Vol, veh/h	0	0	0	210	0	20	20	285	0	0	550	730
Future Vol, veh/h	0	0	0	210	0	20	20	285	0	0	550	730
Conflicting Peds, #/hr	0	0	0	0	0	0	0	0	0	0	0	0
Sign Control	Stop	Stop	Stop	Stop	Stop	Stop	Free	Free	Free	Free	Free	Free
RT Channelized	-	-	None	-	-	None	-	-	None	-	-	None
Storage Length	-	-	-	-	-	500	175	-	-	-	-	375
Veh in Median Storage, #	-	1	-	-	0	-	-	0	-	-	0	-
Grade, %	-	0	-	-	0	-	-	0	-	-	0	-
Peak Hour Factor	98	98	98	98	98	98	98	98	98	98	98	98
Heavy Vehicles, %	0	0	0	1	1	1	1	1	1	1	1	1
Mvmt Flow	0	0	0	214	0	20	20	291	0	0	561	745

Major/Minor	Minor1		Major1			Major2			
Conflicting Flow All	1265	1637	291	1306	0	-	-	-	0
Stage 1	331	331	-	-	-	-	-	-	-
Stage 2	934	1306	-	-	-	-	-	-	-
Critical Hdwy	6.41	6.51	6.21	4.11	-	-	-	-	-
Critical Hdwy Stg 1	5.41	5.51	-	-	-	-	-	-	-
Critical Hdwy Stg 2	5.41	5.51	-	-	-	-	-	-	-
Follow-up Hdwy	3.509	4.009	3.309	2.209	-	-	-	-	-
Pot Cap-1 Maneuver	~ 188	101	751	533	-	0	0	-	-
Stage 1	730	647	-	-	-	0	0	-	-
Stage 2	384	231	-	-	-	0	0	-	-
Platoon blocked, %					-			-	-
Mov Cap-1 Maneuver	~ 181	0	751	533	-	-	-	-	-
Mov Cap-2 Maneuver	~ 181	0	-	-	-	-	-	-	-
Stage 1	702	0	-	-	-	-	-	-	-
Stage 2	384	0	-	-	-	-	-	-	-

Approach	WB	NB	SB
HCM Control Delay, s	162.7	0.8	0
HCM LOS	F		

Minor Lane/Major Mvmt	NBL	NBT	WBLn1	WBLn2	SBT	SBR
Capacity (veh/h)	533	-	181	751	-	-
HCM Lane V/C Ratio	0.038	-	1.184	0.027	-	-
HCM Control Delay (s)	12	-	177.2	9.9	-	-
HCM Lane LOS	B	-	F	A	-	-
HCM 95th %tile Q(veh)	0.1	-	11.3	0.1	-	-

Notes

~: Volume exceeds capacity $: Delay exceeds 300s +: Computation Not Defined *: All major volume in platoon

Movement	EBL	EBR	NBL	NBT	SBT	SBR
Lane Configurations						
Traffic Volume (veh/h)	165	30	35	140	730	30
Future Volume (veh/h)	165	30	35	140	730	30
Initial Q (Qb), veh	0	0	0	0	0	0
Ped-Bike Adj(A_pbT)	1.00	1.00	1.00			1.00
Parking Bus, Adj	1.00	1.00	1.00	1.00	1.00	1.00
Work Zone On Approach	No			No	No	
Adj Sat Flow, veh/h/ln	1885	1885	1885	1885	1900	1900
Adj Flow Rate, veh/h	172	31	36	146	760	31
Peak Hour Factor	0.96	0.96	0.96	0.96	0.96	0.96
Percent Heavy Veh, %	1	1	1	1	0	0
Cap, veh/h	248	221	175	650	1078	44
Arrive On Green	0.14	0.14	0.59	0.59	0.59	0.59
Sat Flow, veh/h	1795	1598	141	1093	1813	74
Grp Volume(v), veh/h	172	31	182	0	0	791
Grp Sat Flow(s),veh/h/ln	1795	1598	1234	0	0	1887
Q Serve(g_s), s	4.3	0.8	0.9	0.0	0.0	13.8
Cycle Q Clear(g_c), s	4.3	0.8	14.7	0.0	0.0	13.8
Prop In Lane	1.00	1.00	0.20			0.04
Lane Grp Cap(c), veh/h	248	221	826	0	0	1122
V/C Ratio(X)	0.69	0.14	0.22	0.00	0.00	0.70
Avail Cap(c_a), veh/h	1283	1142	826	0	0	1748
HCM Platoon Ratio	1.00	1.00	1.00	1.00	1.00	1.00
Upstream Filter(I)	1.00	1.00	1.00	0.00	0.00	1.00
Uniform Delay (d), s/veh	19.4	17.9	4.7	0.0	0.0	6.7
Incr Delay (d2), s/veh	3.5	0.3	0.3	0.0	0.0	1.7
Initial Q Delay(d3),s/veh	0.0	0.0	0.0	0.0	0.0	0.0
%ile BackOfQ(50%),veh/ln	1.8	0.3	0.6	0.0	0.0	3.9
Unsig. Movement Delay, s/veh						
LnGrp Delay(d),s/veh	22.9	18.2	5.0	0.0	0.0	8.4
LnGrp LOS	C	B	A	A	A	A
Approach Vol, veh/h	203			182	791	
Approach Delay, s/veh	22.1			5.0	8.4	
Approach LOS	C			A	A	

Timer - Assigned Phs		2		4		6
Phs Duration (G+Y+Rc), s		34.4		12.8		34.4
Change Period (Y+Rc), s		6.3		6.3		6.3
Max Green Setting (Gmax), s		23.7		33.7		43.7
Max Q Clear Time (g_c+I1), s		16.7		6.3		15.8
Green Ext Time (p_c), s		0.9		0.6		12.3

Intersection Summary	
HCM 6th Ctrl Delay	10.3
HCM 6th LOS	B

Movement	EBL	EBT	EBR	WBL	WBT	WBR	NBL	NBT	NBR	SBL	SBT	SBR
Lane Configurations												
Traffic Volume (veh/h)	95	5	15	10	5	5	45	549	5	5	1376	385
Future Volume (veh/h)	95	5	15	10	5	5	45	549	5	5	1376	385
Initial Q (Qb), veh	0	0	0	0	0	0	0	0	0	0	0	0
Ped-Bike Adj(A_pbT)	1.00		1.00	1.00		1.00	1.00		1.00	1.00		1.00
Parking Bus, Adj	1.00	1.00	1.00	1.00	1.00	1.00	1.00	1.00	1.00	1.00	1.00	1.00
Work Zone On Approach		No			No			No			No	
Adj Sat Flow, veh/h/ln	1885	1885	1885	1900	1900	1900	1826	1826	1826	1856	1856	1856
Adj Flow Rate, veh/h	101	5	16	11	5	5	48	584	5	5	1464	410
Peak Hour Factor	0.94	0.94	0.94	0.94	0.94	0.94	0.94	0.94	0.94	0.94	0.94	0.94
Percent Heavy Veh, %	1	1	1	0	0	0	5	5	5	3	3	3
Cap, veh/h	151	5	17	222	116	116	82	1316	11	548	1324	1122
Arrive On Green	0.09	0.09	0.09	0.01	0.13	0.13	0.02	0.73	0.73	0.00	0.71	0.71
Sat Flow, veh/h	1202	60	190	1810	872	872	1739	1808	15	1767	1856	1572
Grp Volume(v), veh/h	122	0	0	11	0	10	48	0	589	5	1464	410
Grp Sat Flow(s),veh/h/ln	1452	0	0	1810	0	1743	1739	0	1823	1767	1856	1572
Q Serve(g_s), s	12.1	0.0	0.0	0.8	0.0	0.7	1.1	0.0	18.7	0.1	102.9	14.6
Cycle Q Clear(g_c), s	12.1	0.0	0.0	0.8	0.0	0.7	1.1	0.0	18.7	0.1	102.9	14.6
Prop In Lane	0.83		0.13	1.00		0.50	1.00		0.01	1.00		1.00
Lane Grp Cap(c), veh/h	173	0	0	222	0	232	82	0	1327	548	1324	1122
V/C Ratio(X)	0.71	0.00	0.00	0.05	0.00	0.04	0.59	0.00	0.44	0.01	1.11	0.37
Avail Cap(c_a), veh/h	173	0	0	278	0	297	98	0	1327	590	1324	1122
HCM Platoon Ratio	1.00	1.00	1.00	1.00	1.00	1.00	1.00	1.00	1.00	1.00	1.00	1.00
Upstream Filter(I)	1.00	0.00	0.00	1.00	0.00	1.00	1.00	0.00	1.00	1.00	1.00	1.00
Uniform Delay (d), s/veh	65.6	0.0	0.0	57.6	0.0	54.5	42.0	0.0	7.9	6.7	20.7	8.0
Incr Delay (d2), s/veh	13.6	0.0	0.0	0.1	0.0	0.1	6.5	0.0	0.5	0.0	59.1	0.4
Initial Q Delay(d3),s/veh	0.0	0.0	0.0	0.0	0.0	0.0	0.0	0.0	0.0	0.0	0.0	0.0
%ile BackOfQ(50%),veh/ln	5.1	0.0	0.0	0.4	0.0	0.3	1.4	0.0	7.2	0.0	61.5	4.9
Unsig. Movement Delay, s/veh												
LnGrp Delay(d),s/veh	79.2	0.0	0.0	57.7	0.0	54.6	48.5	0.0	8.4	6.7	79.7	8.4
LnGrp LOS	E	A	A	E	A	D	D	A	A	A	F	A
Approach Vol, veh/h		122			21			637			1879	
Approach Delay, s/veh		79.2			56.3			11.4			64.0	
Approach LOS		E			E			B			E	

Timer - Assigned Phs	1	2	3	4	5	6		8
Phs Duration (G+Y+Rc), s	6.0	112.1	6.6	19.5	8.1	110.0		26.1
Change Period (Y+Rc), s	5.5	7.1	5.5	6.9	5.5	7.1		* 6.9
Max Green Setting (Gmax), s	4.0	102.9	5.5	12.6	4.0	102.9		* 25
Max Q Clear Time (g_c+I1), s	2.1	20.7	2.8	14.1	3.1	104.9		2.7
Green Ext Time (p_c), s	0.0	10.3	0.0	0.0	0.0	0.0		0.0

Intersection Summary	
HCM 6th Ctrl Delay	52.0
HCM 6th LOS	D

Notes

* HCM 6th computational engine requires equal clearance times for the phases crossing the barrier.

Intersection	
Int Delay, s/veh	1.5

Movement	EBL	EBT	WBT	WBR	SBL	SBR
Lane Configurations						
Traffic Vol, veh/h	38	385	65	11	11	38
Future Vol, veh/h	38	385	65	11	11	38
Conflicting Peds, #/hr	0	0	0	0	0	0
Sign Control	Free	Free	Free	Free	Stop	Stop
RT Channelized	-	None	-	None	-	None
Storage Length	450	-	-	-	0	-
Veh in Median Storage, #	-	0	0	-	0	-
Grade, %	-	0	0	-	0	-
Peak Hour Factor	89	89	89	89	89	89
Heavy Vehicles, %	2	2	2	2	49	49
Mvmt Flow	43	433	73	12	12	43

Major/Minor	Major1		Major2		Minor2	
Conflicting Flow All	85	0	-	0	598	79
Stage 1	-	-	-	-	79	-
Stage 2	-	-	-	-	519	-
Critical Hdwy	4.12	-	-	-	6.89	6.69
Critical Hdwy Stg 1	-	-	-	-	5.89	-
Critical Hdwy Stg 2	-	-	-	-	5.89	-
Follow-up Hdwy	2.218	-	-	-	3.941	3.741
Pot Cap-1 Maneuver	1512	-	-	-	396	865
Stage 1	-	-	-	-	838	-
Stage 2	-	-	-	-	512	-
Platoon blocked, %		-	-	-		
Mov Cap-1 Maneuver	1512	-	-	-	385	865
Mov Cap-2 Maneuver	-	-	-	-	385	-
Stage 1	-	-	-	-	815	-
Stage 2	-	-	-	-	512	-

Approach	EB	WB	SB
HCM Control Delay, s	0.7	0	10.8
HCM LOS			B

Minor Lane/Major Mvmt	EBL	EBT	WBT	WBR	SBLn1
Capacity (veh/h)	1512	-	-	-	676
HCM Lane V/C Ratio	0.028	-	-	-	0.081
HCM Control Delay (s)	7.5	-	-	-	10.8
HCM Lane LOS	A	-	-	-	B
HCM 95th %tile Q(veh)	0.1	-	-	-	0.3

Intersection	
Int Delay, s/veh	6.5

Movement	EBL	EBT	EBR	WBL	WBT	WBR	NBL	NBT	NBR	SBL	SBT	SBR
Lane Configurations												
Traffic Vol, veh/h	0	218	15	5	103	0	100	5	190	5	0	0
Future Vol, veh/h	0	218	15	5	103	0	100	5	190	5	0	0
Conflicting Peds, #/hr	0	0	0	0	0	0	0	0	0	0	0	0
Sign Control	Free	Free	Free	Free	Free	Free	Stop	Stop	Stop	Stop	Stop	Stop
RT Channelized	-	-	None	-	-	None	-	-	None	-	-	None
Storage Length	-	-	-	-	-	-	-	-	-	-	-	-
Veh in Median Storage, #	-	0	-	-	0	-	-	0	-	-	0	-
Grade, %	-	0	-	-	0	-	-	0	-	-	0	-
Peak Hour Factor	89	89	89	89	89	89	89	89	89	89	89	89
Heavy Vehicles, %	4	4	4	30	30	30	1	1	1	0	0	0
Mvmt Flow	0	245	17	6	116	0	112	6	213	6	0	0

Major/Minor	Major1			Major2			Minor1			Minor2		
Conflicting Flow All	116	0	0	262	0	0	382	382	131	254	390	116
Stage 1	-	-	-	-	-	-	254	254	-	128	128	-
Stage 2	-	-	-	-	-	-	128	128	-	126	262	-
Critical Hdwy	4.16	-	-	4.55	-	-	7.315	6.515	6.915	7.3	6.5	6.2
Critical Hdwy Stg 1	-	-	-	-	-	-	6.515	5.515	-	6.1	5.5	-
Critical Hdwy Stg 2	-	-	-	-	-	-	6.115	5.515	-	6.5	5.5	-
Follow-up Hdwy	2.238	-	-	2.485	-	-	3.5095	4.0095	3.3095	3.5	4	3.3
Pot Cap-1 Maneuver	1458	-	-	1137	-	-	565	552	898	694	548	942
Stage 1	-	-	-	-	-	-	731	699	-	881	794	-
Stage 2	-	-	-	-	-	-	878	792	-	870	695	-
Platoon blocked, %		-	-		-	-						
Mov Cap-1 Maneuver	1458	-	-	1137	-	-	562	549	898	523	545	942
Mov Cap-2 Maneuver	-	-	-	-	-	-	562	549	-	523	545	-
Stage 1	-	-	-	-	-	-	731	699	-	881	789	-
Stage 2	-	-	-	-	-	-	873	787	-	658	695	-

Approach	EB	WB	NB	SB
HCM Control Delay, s	0	0.4	13.8	12
HCM LOS			B	B

Minor Lane/Major Mvmt	NBLn1	EBL	EBT	EBR	WBL	WBT	WBR	SBLn1
Capacity (veh/h)	740	1458	-	-	1137	-	-	523
HCM Lane V/C Ratio	0.448	-	-	-	0.005	-	-	0.011
HCM Control Delay (s)	13.8	0	-	-	8.2	0	-	12
HCM Lane LOS	B	A	-	-	A	A	-	B
HCM 95th %tile Q(veh)	2.3	0	-	-	0	-	-	0

Movement	WBL	WBR	NBT	NBR	SBL	SBT
Lane Configurations						
Traffic Volume (veh/h)	29	164	971	184	64	326
Future Volume (veh/h)	29	164	971	184	64	326
Initial Q (Qb), veh	0	0	0	0	0	0
Ped-Bike Adj(A_pbT)	1.00	1.00		1.00	1.00	
Parking Bus, Adj	1.00	1.00	1.00	1.00	1.00	1.00
Work Zone On Approach	No		No			No
Adj Sat Flow, veh/h/ln	1618	1618	1856	1856	1826	1826
Adj Flow Rate, veh/h	31	176	1044	198	69	351
Peak Hour Factor	0.93	0.93	0.93	0.93	0.93	0.93
Percent Heavy Veh, %	19	19	3	3	5	5
Cap, veh/h	33	186	1037	197	99	1369
Arrive On Green	0.16	0.16	0.68	0.68	0.03	0.75
Sat Flow, veh/h	208	1181	1516	288	1739	1826
Grp Volume(v), veh/h	208	0	0	1242	69	351
Grp Sat Flow(s),veh/h/ln	1395	0	0	1804	1739	1826
Q Serve(g_s), s	22.9	0.0	0.0	106.3	1.9	9.3
Cycle Q Clear(g_c), s	22.9	0.0	0.0	106.3	1.9	9.3
Prop In Lane	0.15	0.85		0.16	1.00	
Lane Grp Cap(c), veh/h	220	0	0	1233	99	1369
V/C Ratio(X)	0.95	0.00	0.00	1.01	0.69	0.26
Avail Cap(c_a), veh/h	220	0	0	1233	106	1369
HCM Platoon Ratio	1.00	1.00	1.00	1.00	1.00	1.00
Upstream Filter(I)	1.00	0.00	0.00	1.00	1.00	1.00
Uniform Delay (d), s/veh	64.8	0.0	0.0	24.6	44.9	6.0
Incr Delay (d2), s/veh	45.5	0.0	0.0	27.3	18.8	0.1
Initial Q Delay(d3),s/veh	0.0	0.0	0.0	0.0	0.0	0.0
%ile BackOfQ(50%),veh/ln	11.0	0.0	0.0	51.4	2.4	3.5
Unsig. Movement Delay, s/veh						
LnGrp Delay(d),s/veh	110.4	0.0	0.0	51.9	63.7	6.2
LnGrp LOS	F	A	A	F	E	A
Approach Vol, veh/h	208		1242			420
Approach Delay, s/veh	110.4		51.9			15.6
Approach LOS	F		D			B

Timer - Assigned Phs	1	2				6	8
Phs Duration (G+Y+Rc), s	10.2	114.4				124.6	30.8
Change Period (Y+Rc), s	5.5	* 8.1				* 8.1	6.3
Max Green Setting (Gmax), s	5.3	* 1.1E2				* 1.2E2	24.5
Max Q Clear Time (g_c+I1), s	3.9	108.3				11.3	24.9
Green Ext Time (p_c), s	0.0	0.0				3.6	0.0

Intersection Summary	
HCM 6th Ctrl Delay	50.2
HCM 6th LOS	D

Notes

User approved pedestrian interval to be less than phase max green.

User approved volume balancing among the lanes for turning movement.

* HCM 6th computational engine requires equal clearance times for the phases crossing the barrier.

Movement	EBL	EBR	NBL	NBT	SBT	SBR
Lane Configurations						
Traffic Volume (vph)	80	61	81	1305	165	50
Future Volume (vph)	80	61	81	1305	165	50
Ideal Flow (vphpl)	1900	1900	1900	1900	1900	1900
Total Lost time (s)	5.0	5.0	6.5	6.5	6.5	6.5
Lane Util. Factor	1.00	1.00	1.00	1.00	1.00	1.00
Frt	1.00	0.85	1.00	1.00	1.00	0.85
Flt Protected	0.95	1.00	0.95	1.00	1.00	1.00
Satd. Flow (prot)	1641	1468	1752	1845	1743	1482
Flt Permitted	0.95	1.00	0.56	1.00	1.00	1.00
Satd. Flow (perm)	1641	1468	1034	1845	1743	1482
Peak-hour factor, PHF	0.92	0.92	0.92	0.92	0.92	0.92
Adj. Flow (vph)	87	66	88	1418	179	54
RTOR Reduction (vph)	0	60	0	0	0	22
Lane Group Flow (vph)	87	6	88	1418	179	32
Heavy Vehicles (%)	10%	10%	3%	3%	9%	9%
Turn Type	custom	custom	pm+pt	NA	NA	Perm
Protected Phases	3	3	5	2	6	
Permitted Phases	4	4	2			6
Actuated Green, G (s)	6.9	6.9	54.3	54.3	43.3	43.3
Effective Green, g (s)	6.9	6.9	54.3	54.3	43.3	43.3
Actuated g/C Ratio	0.09	0.09	0.75	0.75	0.60	0.60
Clearance Time (s)	5.0	5.0	6.5	6.5	6.5	6.5
Vehicle Extension (s)	2.0	2.0	2.0	5.0	5.0	5.0
Lane Grp Cap (vph)	155	139	816	1378	1038	882
v/s Ratio Prot	c0.05	0.00	0.01	c0.77	0.10	
v/s Ratio Perm			0.07			0.02
v/c Ratio	0.56	0.05	0.11	1.03	0.17	0.04
Uniform Delay, d1	31.5	29.9	2.8	9.2	6.6	6.1
Progression Factor	1.00	1.00	1.00	1.00	1.00	1.00
Incremental Delay, d2	2.8	0.0	0.0	32.0	0.2	0.0
Delay (s)	34.2	30.0	2.8	41.2	6.8	6.1
Level of Service	C	C	A	D	A	A
Approach Delay (s)	32.4			38.9	6.6	
Approach LOS	C			D	A	

Intersection Summary			
HCM 2000 Control Delay	34.4	HCM 2000 Level of Service	C
HCM 2000 Volume to Capacity ratio	1.16		
Actuated Cycle Length (s)	72.7	Sum of lost time (s)	21.0
Intersection Capacity Utilization	82.7%	ICU Level of Service	E
Analysis Period (min)	15		
c Critical Lane Group			

Movement	EBL	EBR	NBL	NBT	SBT	SBR
Lane Configurations						
Traffic Volume (vph)	341	55	20	1045	170	56
Future Volume (vph)	341	55	20	1045	170	56
Ideal Flow (vphpl)	1900	1900	1900	1900	1900	1900
Total Lost time (s)	5.0	5.0	6.0	6.0	6.0	5.0
Lane Util. Factor	1.00	1.00	1.00	1.00	1.00	1.00
Frt	1.00	0.85	1.00	1.00	1.00	0.85
Flt Protected	0.95	1.00	0.95	1.00	1.00	1.00
Satd. Flow (prot)	1770	1583	1752	1845	1810	1538
Flt Permitted	0.95	1.00	0.60	1.00	1.00	1.00
Satd. Flow (perm)	1770	1583	1108	1845	1810	1538
Peak-hour factor, PHF	0.91	0.91	0.91	0.91	0.91	0.91
Adj. Flow (vph)	375	60	22	1148	187	62
RTOR Reduction (vph)	0	45	0	0	0	7
Lane Group Flow (vph)	375	15	22	1148	187	55
Heavy Vehicles (%)	2%	2%	3%	3%	5%	5%
Turn Type	custom	custom	pm+pt	NA	NA	pm+ov
Protected Phases	3	3	5	2	6	3
Permitted Phases	4	4	2			6
Actuated Green, G (s)	43.7	43.7	125.3	125.3	115.9	159.6
Effective Green, g (s)	43.7	43.7	125.3	125.3	115.9	159.6
Actuated g/C Ratio	0.24	0.24	0.70	0.70	0.64	0.89
Clearance Time (s)	5.0	5.0	6.0	6.0	6.0	5.0
Vehicle Extension (s)	2.0	2.0	2.0	2.0	2.0	2.0
Lane Grp Cap (vph)	429	384	783	1284	1165	1363
v/s Ratio Prot	c0.21	0.01	0.00	c0.62	0.10	0.01
v/s Ratio Perm			0.02			0.03
v/c Ratio	0.87	0.04	0.03	0.89	0.16	0.04
Uniform Delay, d1	65.5	52.1	8.6	22.0	12.7	1.2
Progression Factor	1.00	1.00	1.00	1.00	1.00	1.00
Incremental Delay, d2	17.1	0.0	0.0	9.8	0.3	0.0
Delay (s)	82.6	52.1	8.6	31.8	13.0	1.2
Level of Service	F	D	A	C	B	A
Approach Delay (s)	78.4			31.4	10.1	
Approach LOS	E			C	B	

Intersection Summary			
HCM 2000 Control Delay	39.6	HCM 2000 Level of Service	D
HCM 2000 Volume to Capacity ratio	0.94		
Actuated Cycle Length (s)	180.0	Sum of lost time (s)	20.0
Intersection Capacity Utilization	83.1%	ICU Level of Service	E
Analysis Period (min)	15		
c Critical Lane Group			

Intersection	
Int Delay, s/veh	0.8

Movement	EBL	EBT	EBR	WBL	WBT	WBR	NBL	NBT	NBR	SBL	SBT	SBR
Lane Configurations												
Traffic Vol, veh/h	0	0	0	15	0	15	10	975	0	0	60	95
Future Vol, veh/h	0	0	0	15	0	15	10	975	0	0	60	95
Conflicting Peds, #/hr	0	0	0	0	0	0	0	0	0	0	0	0
Sign Control	Stop	Stop	Stop	Stop	Stop	Stop	Free	Free	Free	Free	Free	Free
RT Channelized	-	-	None	-	-	None	-	-	None	-	-	None
Storage Length	-	-	-	-	-	500	175	-	-	-	-	375
Veh in Median Storage, #	-	1	-	-	0	-	-	0	-	-	0	-
Grade, %	-	0	-	-	0	-	-	0	-	-	0	-
Peak Hour Factor	83	83	83	83	83	83	83	83	83	83	83	83
Heavy Vehicles, %	0	0	0	19	19	19	3	3	3	4	4	4
Mvmt Flow	0	0	0	18	0	18	12	1175	0	0	72	114

Major/Minor	Minor1			Major1			Major2		
Conflicting Flow All	1328	1385	1175	186	0	-	-	-	0
Stage 1	1199	1199	-	-	-	-	-	-	-
Stage 2	129	186	-	-	-	-	-	-	-
Critical Hdwy	6.59	6.69	6.39	4.13	-	-	-	-	-
Critical Hdwy Stg 1	5.59	5.69	-	-	-	-	-	-	-
Critical Hdwy Stg 2	5.59	5.69	-	-	-	-	-	-	-
Follow-up Hdwy	3.671	4.171	3.471	2.227	-	-	-	-	-
Pot Cap-1 Maneuver	157	132	215	1382	-	0	0	-	-
Stage 1	264	240	-	-	-	0	0	-	-
Stage 2	857	715	-	-	-	0	0	-	-
Platoon blocked, %					-			-	-
Mov Cap-1 Maneuver	156	0	215	1382	-	-	-	-	-
Mov Cap-2 Maneuver	156	0	-	-	-	-	-	-	-
Stage 1	262	0	-	-	-	-	-	-	-
Stage 2	857	0	-	-	-	-	-	-	-

Approach	WB	NB	SB
HCM Control Delay, s	27.2	0.1	0
HCM LOS	D		

Minor Lane/Major Mvmt	NBL	NBT	WBLn1	WBLn2	SBT	SBR
Capacity (veh/h)	1382	-	156	215	-	-
HCM Lane V/C Ratio	0.009	-	0.116	0.084	-	-
HCM Control Delay (s)	7.6	-	31.1	23.3	-	-
HCM Lane LOS	A	-	D	C	-	-
HCM 95th %tile Q(veh)	0	-	0.4	0.3	-	-

Movement	EBL	EBR	NBL	NBT	SBT	SBR
Lane Configurations						
Traffic Volume (veh/h)	625	10	90	360	70	5
Future Volume (veh/h)	625	10	90	360	70	5
Initial Q (Qb), veh	0	0	0	0	0	0
Ped-Bike Adj(A_pbT)	1.00	1.00	1.00			1.00
Parking Bus, Adj	1.00	1.00	1.00	1.00	1.00	1.00
Work Zone On Approach	No			No	No	
Adj Sat Flow, veh/h/ln	1856	1856	1870	1870	1811	1811
Adj Flow Rate, veh/h	762	12	110	439	85	6
Peak Hour Factor	0.82	0.82	0.82	0.82	0.82	0.82
Percent Heavy Veh, %	3	3	2	2	6	6
Cap, veh/h	813	724	166	570	658	46
Arrive On Green	0.46	0.46	0.39	0.39	0.39	0.39
Sat Flow, veh/h	1767	1572	294	1449	1672	118
Grp Volume(v), veh/h	762	12	549	0	0	91
Grp Sat Flow(s),veh/h/ln	1767	1572	1743	0	0	1790
Q Serve(g_s), s	35.2	0.4	18.8	0.0	0.0	2.8
Cycle Q Clear(g_c), s	35.2	0.4	23.8	0.0	0.0	2.8
Prop In Lane	1.00	1.00	0.20			0.07
Lane Grp Cap(c), veh/h	813	724	736	0	0	704
V/C Ratio(X)	0.94	0.02	0.75	0.00	0.00	0.13
Avail Cap(c_a), veh/h	1000	890	1233	0	0	704
HCM Platoon Ratio	1.00	1.00	1.00	1.00	1.00	1.00
Upstream Filter(I)	1.00	1.00	1.00	0.00	0.00	1.00
Uniform Delay (d), s/veh	22.0	12.6	22.9	0.0	0.0	16.7
Incr Delay (d2), s/veh	13.9	0.0	3.2	0.0	0.0	0.2
Initial Q Delay(d3),s/veh	0.0	0.0	0.0	0.0	0.0	0.0
%ile BackOfQ(50%),veh/ln	16.5	0.1	9.9	0.0	0.0	1.1
Unsig. Movement Delay, s/veh						
LnGrp Delay(d),s/veh	35.9	12.6	26.1	0.0	0.0	16.9
LnGrp LOS	D	B	C	A	A	B
Approach Vol, veh/h	774			549	91	
Approach Delay, s/veh	35.5			26.1	16.9	
Approach LOS	D			C	B	

Timer - Assigned Phs		2		4		6
Phs Duration (G+Y+Rc), s		40.2		45.9		40.2
Change Period (Y+Rc), s		6.3		6.3		6.3
Max Green Setting (Gmax), s		58.7		48.7		33.7
Max Q Clear Time (g_c+I1), s		25.8		37.2		4.8
Green Ext Time (p_c), s		8.0		2.4		0.9

Intersection Summary	
HCM 6th Ctrl Delay	30.7
HCM 6th LOS	C

Movement	EBL	EBT	EBR	WBL	WBT	WBR	NBL	NBT	NBR	SBL	SBT	SBR
Lane Configurations												
Traffic Volume (veh/h)	185	10	25	5	0	5	10	1125	0	5	385	70
Future Volume (veh/h)	185	10	25	5	0	5	10	1125	0	5	385	70
Initial Q (Qb), veh	0	0	0	0	0	0	0	0	0	0	0	0
Ped-Bike Adj(A_pbT)	1.00		0.98	1.00		1.00	1.00		1.00	1.00		1.00
Parking Bus, Adj	1.00	1.00	1.00	1.00	1.00	1.00	1.00	1.00	1.00	1.00	1.00	1.00
Work Zone On Approach		No			No			No			No	
Adj Sat Flow, veh/h/ln	1885	1885	1885	1693	1693	1693	1752	1752	1752	1648	1648	1648
Adj Flow Rate, veh/h	201	11	27	5	0	5	11	1223	0	5	418	76
Peak Hour Factor	0.92	0.92	0.92	0.92	0.92	0.92	0.92	0.92	0.92	0.92	0.92	0.92
Percent Heavy Veh, %	1	1	1	14	14	14	10	10	10	17	17	17
Cap, veh/h	210	9	22	268	0	253	543	1191	0	58	1115	945
Arrive On Green	0.13	0.13	0.13	0.00	0.00	0.18	0.01	0.68	0.00	0.00	0.68	0.68
Sat Flow, veh/h	1222	67	164	1612	0	1434	1668	1752	0	1570	1648	1397
Grp Volume(v), veh/h	239	0	0	5	0	5	11	1223	0	5	418	76
Grp Sat Flow(s),veh/h/ln	1453	0	0	1612	0	1434	1668	1752	0	1570	1648	1397
Q Serve(g_s), s	18.6	0.0	0.0	0.4	0.0	0.4	0.3	94.9	0.0	0.1	15.3	2.6
Cycle Q Clear(g_c), s	18.6	0.0	0.0	0.4	0.0	0.4	0.3	94.9	0.0	0.1	15.3	2.6
Prop In Lane	0.84		0.11	1.00		1.00	1.00		0.00	1.00		1.00
Lane Grp Cap(c), veh/h	241	0	0	268	0	253	543	1191	0	58	1115	945
V/C Ratio(X)	0.99	0.00	0.00	0.02	0.00	0.02	0.02	1.03	0.00	0.09	0.38	0.08
Avail Cap(c_a), veh/h	241	0	0	348	0	335	578	1191	0	97	1121	950
HCM Platoon Ratio	1.00	1.00	1.00	1.00	1.00	1.00	1.00	1.00	1.00	1.00	1.00	1.00
Upstream Filter(I)	1.00	0.00	0.00	1.00	0.00	1.00	1.00	1.00	0.00	1.00	1.00	1.00
Uniform Delay (d), s/veh	62.2	0.0	0.0	50.4	0.0	47.5	7.9	22.3	0.0	39.1	9.8	7.7
Incr Delay (d2), s/veh	55.3	0.0	0.0	0.0	0.0	0.0	0.0	33.1	0.0	0.6	0.4	0.1
Initial Q Delay(d3),s/veh	0.0	0.0	0.0	0.0	0.0	0.0	0.0	0.0	0.0	0.0	0.0	0.0
%ile BackOfQ(50%),veh/ln	12.3	0.0	0.0	0.2	0.0	0.1	0.1	46.4	0.0	0.1	5.5	0.8
Unsig. Movement Delay, s/veh												
LnGrp Delay(d),s/veh	117.6	0.0	0.0	50.4	0.0	47.5	7.9	55.4	0.0	39.7	10.2	7.8
LnGrp LOS	F	A	A	D	A	D	A	F	A	D	B	A
Approach Vol, veh/h		239			10			1234			499	
Approach Delay, s/veh		117.6			49.0			55.0			10.2	
Approach LOS		F			D			D			B	

Timer - Assigned Phs	1	2	3	4	5	6		8
Phs Duration (G+Y+Rc), s	6.0	102.0	6.0	25.5	6.5	101.5		31.5
Change Period (Y+Rc), s	5.5	7.1	5.5	6.9	5.5	7.1		* 6.9
Max Green Setting (Gmax), s	4.0	94.9	7.5	18.6	4.0	94.9		* 33
Max Q Clear Time (g_c+I1), s	2.1	96.9	2.4	20.6	2.3	17.3		2.4
Green Ext Time (p_c), s	0.0	0.0	0.0	0.0	0.0	7.1		0.0

Intersection Summary	
HCM 6th Ctrl Delay	51.2
HCM 6th LOS	D

Notes

* HCM 6th computational engine requires equal clearance times for the phases crossing the barrier.

Movement	EBL	EBT	EBR	WBL	WBT	WBR	NBL	NBT	NBR	SBL	SBT	SBR
Lane Configurations												
Traffic Volume (vph)	620	325	85	5	995	545	105	100	10	100	25	280
Future Volume (vph)	620	325	85	5	995	545	105	100	10	100	25	280
Ideal Flow (vphpl)	1900	1900	1900	1900	1900	1900	1900	1900	1900	1900	1900	1900
Total Lost time (s)	6.4	6.4	6.4	6.4	6.4	6.4	5.0	5.0		5.0	5.0	6.4
Lane Util. Factor	1.00	0.95	1.00	1.00	0.95	1.00	1.00	1.00		1.00	1.00	1.00
Frpb, ped/bikes	1.00	1.00	1.00	1.00	1.00	1.00	1.00	1.00		1.00	1.00	1.00
Flpb, ped/bikes	1.00	1.00	1.00	1.00	1.00	1.00	0.99	1.00		1.00	1.00	1.00
Frt	1.00	1.00	0.85	1.00	1.00	0.85	1.00	0.99		1.00	1.00	0.85
Flt Protected	0.95	1.00	1.00	0.95	1.00	1.00	0.95	1.00		0.95	1.00	1.00
Satd. Flow (prot)	1687	3374	1509	1687	3374	1509	1778	1854		1736	1827	1546
Flt Permitted	0.95	1.00	1.00	0.95	1.00	1.00	0.53	1.00		0.68	1.00	1.00
Satd. Flow (perm)	1687	3374	1509	1687	3374	1509	985	1854		1247	1827	1546
Peak-hour factor, PHF	0.95	0.95	0.95	0.95	0.95	0.95	0.95	0.95	0.95	0.95	0.95	0.95
Adj. Flow (vph)	653	342	89	5	1047	574	111	105	11	105	26	295
RTOR Reduction (vph)	0	0	28	0	0	238	0	3	0	0	0	56
Lane Group Flow (vph)	653	342	61	5	1047	336	111	113	0	105	26	239
Confl. Peds. (#/hr)							9					9
Heavy Vehicles (%)	7%	7%	7%	7%	7%	7%	1%	1%	1%	4%	4%	4%
Turn Type	Prot	NA	Perm	Prot	NA	Perm	pm+pt	NA		pm+pt	NA	pm+ov
Protected Phases	5 15	2		1	6		3	8		7	4	5 15
Permitted Phases			2			6	8			4		4
Actuated Green, G (s)	51.8	106.7	106.7	1.3	49.8	49.8	30.4	19.4		18.3	12.3	64.1
Effective Green, g (s)	51.8	106.7	106.7	1.3	49.8	49.8	30.4	19.4		18.3	12.3	64.1
Actuated g/C Ratio	0.33	0.68	0.68	0.01	0.32	0.32	0.19	0.12		0.12	0.08	0.41
Clearance Time (s)		6.4	6.4	6.4	6.4	6.4	5.0	5.0		5.0	5.0	
Vehicle Extension (s)		5.0	5.0	3.0	5.0	5.0	3.0	3.0		3.0	3.0	
Lane Grp Cap (vph)	559	2304	1030	14	1075	481	258	230		164	143	634
v/s Ratio Prot	c0.39	0.10		0.00	c0.31		c0.04	0.06		c0.02	0.01	0.12
v/s Ratio Perm			0.04			0.22	0.05			c0.05		0.03
v/c Ratio	1.17	0.15	0.06	0.36	0.97	0.70	0.43	0.49		0.64	0.18	0.38
Uniform Delay, d1	52.2	8.7	8.2	77.0	52.6	46.6	54.1	63.8		65.0	67.2	32.1
Progression Factor	1.00	1.00	1.00	1.00	1.00	1.00	1.00	1.00		1.00	1.00	1.00
Incremental Delay, d2	93.7	0.1	0.1	14.9	21.5	5.5	1.2	1.7		8.3	0.6	0.4
Delay (s)	145.9	8.8	8.2	92.0	74.0	52.1	55.3	65.5		73.2	67.9	32.5
Level of Service	F	A	A	F	E	D	E	E		E	E	C
Approach Delay (s)		91.4			66.4			60.5			44.7	
Approach LOS		F			E			E			D	

Intersection Summary			
HCM 2000 Control Delay	71.3	HCM 2000 Level of Service	E
HCM 2000 Volume to Capacity ratio	0.97		
Actuated Cycle Length (s)	156.2	Sum of lost time (s)	29.2
Intersection Capacity Utilization	93.7%	ICU Level of Service	F
Analysis Period (min)	15		

c Critical Lane Group

Movement	EBT	EBR	WBL	WBT	NBL	NBR
Lane Configurations						
Traffic Volume (veh/h)	390	226	334	1046	1011	635
Future Volume (veh/h)	390	226	334	1046	1011	635
Initial Q (Qb), veh	0	0	0	0	0	0
Ped-Bike Adj(A_pbT)		1.00	1.00		1.00	1.00
Parking Bus, Adj	1.00	1.00	1.00	1.00	1.00	1.00
Work Zone On Approach	No			No	No	
Adj Sat Flow, veh/h/ln	1678	1678	1781	1781	1885	1885
Adj Flow Rate, veh/h	424	0	363	1137	1099	690
Peak Hour Factor	0.92	0.92	0.92	0.92	0.92	0.92
Percent Heavy Veh, %	15	15	8	8	1	1
Cap, veh/h	1120		384	1760	1358	623
Arrive On Green	0.24	0.00	0.23	0.52	0.39	0.39
Sat Flow, veh/h	4731	1422	1697	3474	3483	1598
Grp Volume(v), veh/h	424	0	363	1137	1099	690
Grp Sat Flow(s),veh/h/ln	1527	1422	1697	1692	1742	1598
Q Serve(g_s), s	10.0	0.0	27.4	31.6	36.6	50.7
Cycle Q Clear(g_c), s	10.0	0.0	27.4	31.6	36.6	50.7
Prop In Lane		1.00	1.00		1.00	1.00
Lane Grp Cap(c), veh/h	1120		384	1760	1358	623
V/C Ratio(X)	0.38		0.95	0.65	0.81	1.11
Avail Cap(c_a), veh/h	1120		386	1760	1358	623
HCM Platoon Ratio	1.00	1.00	1.00	1.00	1.00	1.00
Upstream Filter(I)	1.00	0.00	0.80	0.80	1.00	1.00
Uniform Delay (d), s/veh	40.9	0.0	49.5	22.6	35.3	39.7
Incr Delay (d2), s/veh	1.0	0.0	27.8	1.5	5.3	69.2
Initial Q Delay(d3),s/veh	0.0	0.0	0.0	0.0	0.0	0.0
%ile BackOfQ(50%),veh/ln	3.9	0.0	14.5	12.7	16.4	31.5
Unsig. Movement Delay, s/veh						
LnGrp Delay(d),s/veh	41.9	0.0	77.3	24.0	40.6	108.8
LnGrp LOS	D		E	C	D	F
Approach Vol, veh/h	424	A		1500	1789	
Approach Delay, s/veh	41.9			36.9	66.9	
Approach LOS	D			D	E	

Timer - Assigned Phs	1	2				6	8
Phs Duration (G+Y+Rc), s	35.8	38.2				74.0	56.0
Change Period (Y+Rc), s	6.4	6.4				6.4	5.3
Max Green Setting (Gmax), s	29.6	31.6				67.6	50.7
Max Q Clear Time (g_c+I1), s	29.4	12.0				33.6	52.7
Green Ext Time (p_c), s	0.0	4.8				18.7	0.0

Intersection Summary	
HCM 6th Ctrl Delay	51.9
HCM 6th LOS	D

Notes

Unsignalized Delay for [EBR] is excluded from calculations of the approach delay and intersection delay.

Movement	EBL	EBT	EBR	WBL	WBT	WBR	NBL	NBT	NBR	SBL	SBT	SBR
Lane Configurations												
Traffic Volume (vph)	35	539	0	0	1854	538	0	0	387	0	0	663
Future Volume (vph)	35	539	0	0	1854	538	0	0	387	0	0	663
Ideal Flow (vphpl)	1900	1900	1900	1900	1900	1900	1900	1900	1900	1900	1900	1900
Total Lost time (s)	5.0	5.0			5.0	5.0			4.0			5.0
Lane Util. Factor	1.00	0.95			0.91	1.00			1.00			1.00
Frt	1.00	1.00			1.00	0.85			0.86			0.86
Flt Protected	0.95	1.00			1.00	1.00			1.00			1.00
Satd. Flow (prot)	1556	3112			4988	1553			1405			1522
Flt Permitted	0.95	1.00			1.00	1.00			1.00			1.00
Satd. Flow (perm)	1556	3112			4988	1553			1405			1522
Peak-hour factor, PHF	0.98	0.98	0.98	0.98	0.98	0.98	0.98	0.98	0.98	0.98	0.98	0.98
Adj. Flow (vph)	36	550	0	0	1892	549	0	0	395	0	0	677
RTOR Reduction (vph)	0	0	0	0	0	196	0	0	0	0	0	68
Lane Group Flow (vph)	36	550	0	0	1892	353	0	0	395	0	0	609
Heavy Vehicles (%)	16%	16%	16%	4%	4%	4%	17%	17%	17%	8%	8%	8%
Turn Type	Prot	NA			NA	custom			Free			pt+ov
Protected Phases	1	1 6 8			6	4 5 13						1 8
Permitted Phases						6			Free			8 1
Actuated Green, G (s)	24.2	96.0			57.0	70.8			110.0			34.0
Effective Green, g (s)	24.2	96.0			57.0	70.8			110.0			34.0
Actuated g/C Ratio	0.22	0.87			0.52	0.64			1.00			0.31
Clearance Time (s)	5.0				5.0							
Vehicle Extension (s)	2.0				2.0							
Lane Grp Cap (vph)	342	2715			2584	1070			1405			470
v/s Ratio Prot	0.02	0.18			c0.38	0.13						c0.40
v/s Ratio Perm						0.10			c0.28			
v/c Ratio	0.11	0.20			0.73	0.33			0.28			1.29
Uniform Delay, d1	34.3	1.1			20.6	8.9			0.0			38.0
Progression Factor	0.96	1.76			1.00	1.00			1.00			1.00
Incremental Delay, d2	0.0	0.0			1.9	0.1			0.5			147.8
Delay (s)	32.8	1.9			22.4	8.9			0.5			185.8
Level of Service	C	A			C	A			A			F
Approach Delay (s)		3.8			19.4			0.5			185.8	
Approach LOS		A			B			A			F	

Intersection Summary			
HCM 2000 Control Delay	42.8	HCM 2000 Level of Service	D
HCM 2000 Volume to Capacity ratio	0.98		
Actuated Cycle Length (s)	110.0	Sum of lost time (s)	20.0
Intersection Capacity Utilization	85.2%	ICU Level of Service	E
Analysis Period (min)	15		
c Critical Lane Group			

Movement	EBL	EBT	EBR	WBL	WBT	WBR	NBL	NBT	NBR	SBL	SBT	SBR
Lane Configurations												
Traffic Volume (vph)	445	195	80	697	565	1265	0	0	0	384	943	525
Future Volume (vph)	445	195	80	697	565	1265	0	0	0	384	943	525
Ideal Flow (vphpl)	1900	1900	1900	1900	1900	1900	1900	1900	1900	1900	1900	1900
Total Lost time (s)	5.0	5.0		5.0	5.0	4.0				5.0	5.0	5.0
Lane Util. Factor	0.97	0.95		1.00	0.95	1.00				0.97	0.95	0.95
Frpb, ped/bikes	1.00	0.99		1.00	1.00	1.00				1.00	1.00	1.00
Flpb, ped/bikes	1.00	1.00		1.00	1.00	1.00				1.00	1.00	1.00
Frt	1.00	0.96		1.00	1.00	0.85				1.00	1.00	0.85
Flt Protected	0.95	1.00		0.95	1.00	1.00				0.95	1.00	1.00
Satd. Flow (prot)	3335	3261		1719	3438	1538				3335	1719	1461
Flt Permitted	0.95	1.00		0.95	1.00	1.00				0.95	1.00	1.00
Satd. Flow (perm)	3335	3261		1719	3438	1538				3335	1719	1461
Peak-hour factor, PHF	0.97	0.97	0.97	0.97	0.97	0.97	0.97	0.97	0.97	0.97	0.97	0.97
Adj. Flow (vph)	459	201	82	719	582	1304	0	0	0	396	972	541
RTOR Reduction (vph)	0	40	0	0	0	4	0	0	0	0	0	0
Lane Group Flow (vph)	459	243	0	719	582	1300	0	0	0	396	972	541
Confl. Peds. (#/hr)			2	2								
Heavy Vehicles (%)	5%	5%	5%	5%	5%	5%	0%	0%	0%	5%	5%	5%
Turn Type	Split	NA		Split	NA	custom				Split	NA	custom
Protected Phases	2	2		3	3	7				4	4	4 5
Permitted Phases						7						
Actuated Green, G (s)	12.0	12.0		36.0	36.0	89.0				47.0	47.0	64.0
Effective Green, g (s)	12.0	12.0		36.0	36.0	89.0				47.0	47.0	64.0
Actuated g/C Ratio	0.11	0.11		0.33	0.33	0.81				0.43	0.43	0.58
Clearance Time (s)	5.0	5.0		5.0	5.0	4.0				5.0	5.0	
Vehicle Extension (s)	3.0	3.0		3.0	3.0	3.0				3.0	3.0	
Lane Grp Cap (vph)	363	355		562	1125	1244				1424	734	850
v/s Ratio Prot	c0.14	0.07		c0.42	0.17	0.85				0.12	c0.57	0.37
v/s Ratio Perm												
v/c Ratio	1.26	0.68		1.28	0.52	1.05				0.28	1.32	0.64
Uniform Delay, d1	49.0	47.2		37.0	30.0	10.5				20.5	31.5	15.3
Progression Factor	1.00	1.00		0.72	0.73	1.21				1.00	1.00	1.00
Incremental Delay, d2	139.3	5.4		133.7	1.0	32.5				0.1	155.3	1.6
Delay (s)	188.3	52.6		160.2	22.8	45.2				20.6	186.8	16.8
Level of Service	F	D		F	C	D				C	F	B
Approach Delay (s)		136.5			71.9			0.0			104.2	
Approach LOS		F			E			A			F	

Intersection Summary			
HCM 2000 Control Delay	92.7	HCM 2000 Level of Service	F
HCM 2000 Volume to Capacity ratio	1.30		
Actuated Cycle Length (s)	110.0	Sum of lost time (s)	15.0
Intersection Capacity Utilization	119.5%	ICU Level of Service	H
Analysis Period (min)	15		

c Critical Lane Group

Movement	EBL	EBT	EBR	WBL	WBT	WBR	NBL	NBT	NBR	SBL	SBT	SBR
Lane Configurations												
Traffic Volume (veh/h)	500	450	125	860	600	176	130	870	730	96	862	185
Future Volume (veh/h)	500	450	125	860	600	176	130	870	730	96	862	185
Initial Q (Qb), veh	0	0	0	0	0	0	0	0	0	0	0	0
Ped-Bike Adj(A_pbT)	1.00		1.00	1.00		1.00	1.00		1.00	1.00		1.00
Parking Bus, Adj	1.00	1.00	1.00	1.00	1.00	1.00	1.00	1.00	1.00	1.00	1.00	1.00
Work Zone On Approach		No			No			No			No	
Adj Sat Flow, veh/h/ln	1841	1841	1841	1856	1856	1856	1826	1826	1826	1811	1811	1811
Adj Flow Rate, veh/h	546	421	0	887	619	0	134	897	0	99	889	0
Peak Hour Factor	0.97	0.97	0.97	0.97	0.97	0.97	0.97	0.97	0.97	0.97	0.97	0.97
Percent Heavy Veh, %	4	4	4	3	3	3	5	5	5	6	6	6
Cap, veh/h	755	396		1278	671		159	997		145	988	
Arrive On Green	0.22	0.22	0.00	0.36	0.36	0.00	0.09	0.20	0.00	0.08	0.20	0.00
Sat Flow, veh/h	3506	1841	1560	3534	1856	1572	1739	4985	1547	1725	4944	1535
Grp Volume(v), veh/h	546	421	0	887	619	0	134	897	0	99	889	0
Grp Sat Flow(s),veh/h/ln	1753	1841	1560	1767	1856	1572	1739	1662	1547	1725	1648	1535
Q Serve(g_s), s	18.8	28.0	0.0	27.8	41.5	0.0	9.9	22.8	0.0	7.3	22.8	0.0
Cycle Q Clear(g_c), s	18.8	28.0	0.0	27.8	41.5	0.0	9.9	22.8	0.0	7.3	22.8	0.0
Prop In Lane	1.00		1.00	1.00		1.00	1.00		1.00	1.00		1.00
Lane Grp Cap(c), veh/h	755	396		1278	671		159	997		145	988	
V/C Ratio(X)	0.72	1.06		0.69	0.92		0.84	0.90		0.68	0.90	
Avail Cap(c_a), veh/h	755	396		1278	671		227	997		145	988	
HCM Platoon Ratio	1.00	1.00	1.00	1.00	1.00	1.00	1.00	1.00	1.00	1.00	1.00	1.00
Upstream Filter(I)	1.00	1.00	0.00	0.66	0.66	0.00	0.09	0.09	0.00	1.00	1.00	0.00
Uniform Delay (d), s/veh	47.4	51.0	0.0	35.4	39.8	0.0	58.1	50.7	0.0	57.9	50.7	0.0
Incr Delay (d2), s/veh	5.9	62.5	0.0	2.1	14.8	0.0	1.9	1.4	0.0	13.9	12.8	0.0
Initial Q Delay(d3),s/veh	0.0	0.0	0.0	0.0	0.0	0.0	0.0	0.0	0.0	0.0	0.0	0.0
%ile BackOfQ(50%),veh/ln	8.8	19.6	0.0	12.2	21.3	0.0	4.4	9.6	0.0	3.7	10.6	0.0
Unsig. Movement Delay, s/veh												
LnGrp Delay(d),s/veh	53.3	113.5	0.0	37.5	54.6	0.0	60.0	52.1	0.0	71.7	63.5	0.0
LnGrp LOS	D	F		D	D		E	D		E	E	
Approach Vol, veh/h		967	A		1506	A		1031	A		988	A
Approach Delay, s/veh		79.5			44.5			53.2			64.3	
Approach LOS		E			D			D			E	

Timer - Assigned Phs		2	3	4		6	7	8
Phs Duration (G+Y+Rc), s		52.0	15.9	31.0		33.0	15.9	31.0
Change Period (Y+Rc), s		5.0	4.0	5.0		5.0	5.0	* 5
Max Green Setting (Gmax), s		47.0	17.0	19.0		28.0	10.0	* 26
Max Q Clear Time (g_c+I1), s		43.5	11.9	24.8		30.0	9.3	24.8
Green Ext Time (p_c), s		3.4	0.2	0.0		0.0	0.0	0.9

Intersection Summary	
HCM 6th Ctrl Delay	58.4
HCM 6th LOS	E

Notes

User approved volume balancing among the lanes for turning movement.
* HCM 6th computational engine requires equal clearance times for the phases crossing the barrier.
User approved changes to right turn type.

Movement	EBL	EBT	EBR	WBL	WBT	WBR	NBL	NBT	NBR	SBL	SBT	SBR
Lane Configurations												
Traffic Volume (veh/h)	90	1176	5	5	1461	5	30	5	10	5	5	140
Future Volume (veh/h)	90	1176	5	5	1461	5	30	5	10	5	5	140
Initial Q (Qb), veh	0	0	0	0	0	0	0	0	0	0	0	0
Ped-Bike Adj(A_pbT)	1.00		1.00	1.00		1.00	1.00		1.00	1.00		1.00
Parking Bus, Adj	1.00	1.00	1.00	1.00	1.00	1.00	1.00	1.00	1.00	1.00	1.00	1.00
Work Zone On Approach		No			No			No			No	
Adj Sat Flow, veh/h/ln	1856	1856	1856	1856	1856	1856	1900	1900	1900	1885	1885	1885
Adj Flow Rate, veh/h	97	1265	5	5	1571	5	32	5	11	5	5	151
Peak Hour Factor	0.93	0.93	0.93	0.93	0.93	0.93	0.93	0.93	0.93	0.93	0.93	0.93
Percent Heavy Veh, %	3	3	3	3	3	3	0	0	0	1	1	1
Cap, veh/h	119	2679	11	11	2462	8	187	58	128	118	105	175
Arrive On Green	0.13	1.00	1.00	0.01	0.68	0.68	0.11	0.11	0.11	0.11	0.11	0.11
Sat Flow, veh/h	1767	3602	14	1767	3605	11	1250	528	1162	694	956	1598
Grp Volume(v), veh/h	97	619	651	5	768	808	32	0	16	10	0	151
Grp Sat Flow(s),veh/h/ln	1767	1763	1853	1767	1763	1853	1250	0	1691	1650	0	1598
Q Serve(g_s), s	6.9	0.0	0.0	0.4	31.8	31.8	3.1	0.0	1.1	0.0	0.0	12.1
Cycle Q Clear(g_c), s	6.9	0.0	0.0	0.4	31.8	31.8	3.7	0.0	1.1	0.6	0.0	12.1
Prop In Lane	1.00		0.01	1.00		0.01	1.00		0.69	0.50		1.00
Lane Grp Cap(c), veh/h	119	1311	1378	11	1204	1266	187	0	186	223	0	175
V/C Ratio(X)	0.82	0.47	0.47	0.45	0.64	0.64	0.17	0.00	0.09	0.04	0.00	0.86
Avail Cap(c_a), veh/h	155	1311	1378	155	1204	1266	357	0	416	257	0	209
HCM Platoon Ratio	2.00	2.00	2.00	1.00	1.00	1.00	1.00	1.00	1.00	1.00	1.00	1.00
Upstream Filter(I)	0.45	0.45	0.45	1.00	1.00	1.00	1.00	0.00	1.00	1.00	0.00	1.00
Uniform Delay (d), s/veh	55.5	0.0	0.0	64.4	11.6	11.6	53.4	0.0	52.0	51.8	0.0	56.9
Incr Delay (d2), s/veh	11.2	0.3	0.2	25.3	2.6	2.5	0.6	0.0	0.3	0.1	0.0	27.3
Initial Q Delay(d3),s/veh	0.0	0.0	0.0	0.0	0.0	0.0	0.0	0.0	0.0	0.0	0.0	0.0
%ile BackOfQ(50%),veh/ln	3.3	0.1	0.1	0.2	12.2	12.8	1.0	0.0	0.5	0.3	0.0	6.2
Unsig. Movement Delay, s/veh												
LnGrp Delay(d),s/veh	66.7	0.3	0.2	89.6	14.2	14.0	54.0	0.0	52.3	51.9	0.0	84.2
LnGrp LOS	E	A	A	F	B	B	D	A	D	D	A	F
Approach Vol, veh/h		1367			1581			48			161	
Approach Delay, s/veh		5.0			14.3			53.5			82.2	
Approach LOS		A			B			D			F	

Timer - Assigned Phs	1	2		4	5	6		8
Phs Duration (G+Y+Rc), s	15.3	95.4		19.3	7.4	103.3		19.3
Change Period (Y+Rc), s	6.6	6.6		5.0	6.6	6.6		5.0
Max Green Setting (Gmax), s	11.4	68.4		32.0	11.4	68.4		17.0
Max Q Clear Time (g_c+I1), s	8.9	33.8		5.7	2.4	2.0		14.1
Green Ext Time (p_c), s	0.1	34.3		0.2	0.0	33.3		0.2

Intersection Summary		
HCM 6th Ctrl Delay		14.3
HCM 6th LOS		B

Movement	EBL	EBT	EBR	WBL	WBT	WBR	NBL	NBT	NBR	SBL	SBT	SBR
Lane Configurations												
Traffic Volume (veh/h)	30	1106	55	35	1281	25	160	15	85	45	10	25
Future Volume (veh/h)	30	1106	55	35	1281	25	160	15	85	45	10	25
Initial Q (Qb), veh	0	0	0	0	0	0	0	0	0	0	0	0
Ped-Bike Adj(A_pbT)	1.00		0.99	1.00		0.99	1.00		0.98	1.00		0.94
Parking Bus, Adj	1.00	1.00	1.00	1.00	1.00	1.00	1.00	1.00	1.00	1.00	1.00	1.00
Work Zone On Approach		No			No			No			No	
Adj Sat Flow, veh/h/ln	1796	1796	1796	1856	1856	1856	1870	1870	1870	1826	1826	1826
Adj Flow Rate, veh/h	31	1129	56	36	1307	26	163	15	87	46	10	26
Peak Hour Factor	0.98	0.98	0.98	0.98	0.98	0.98	0.98	0.98	0.98	0.98	0.98	0.98
Percent Heavy Veh, %	7	7	7	3	3	3	2	2	2	5	5	5
Cap, veh/h	44	2223	110	49	2382	47	201	26	153	71	18	46
Arrive On Green	0.03	0.67	0.67	0.06	1.00	1.00	0.11	0.11	0.11	0.04	0.04	0.04
Sat Flow, veh/h	1711	3308	164	1767	3535	70	1781	234	1357	1739	429	1115
Grp Volume(v), veh/h	31	582	603	36	651	682	163	0	102	46	0	36
Grp Sat Flow(s),veh/h/ln	1711	1706	1766	1767	1763	1842	1781	0	1591	1739	0	1544
Q Serve(g_s), s	2.3	22.1	22.1	2.6	0.0	0.0	11.6	0.0	7.9	3.4	0.0	3.0
Cycle Q Clear(g_c), s	2.3	22.1	22.1	2.6	0.0	0.0	11.6	0.0	7.9	3.4	0.0	3.0
Prop In Lane	1.00		0.09	1.00		0.04	1.00		0.85	1.00		0.72
Lane Grp Cap(c), veh/h	44	1146	1186	49	1188	1242	201	0	180	71	0	63
V/C Ratio(X)	0.70	0.51	0.51	0.73	0.55	0.55	0.81	0.00	0.57	0.64	0.00	0.57
Avail Cap(c_a), veh/h	184	1146	1186	190	1188	1242	247	0	220	241	0	214
HCM Platoon Ratio	1.00	1.00	1.00	2.00	2.00	2.00	1.00	1.00	1.00	1.00	1.00	1.00
Upstream Filter(I)	1.00	1.00	1.00	0.81	0.81	0.81	1.00	0.00	1.00	1.00	0.00	1.00
Uniform Delay (d), s/veh	62.8	10.6	10.6	60.9	0.0	0.0	56.3	0.0	54.7	61.4	0.0	61.2
Incr Delay (d2), s/veh	18.0	1.6	1.6	15.2	1.5	1.4	16.9	0.0	4.0	12.9	0.0	10.8
Initial Q Delay(d3),s/veh	0.0	0.0	0.0	0.0	0.0	0.0	0.0	0.0	0.0	0.0	0.0	0.0
%ile BackOfQ(50%),veh/ln	1.2	8.2	8.5	1.3	0.5	0.5	6.2	0.0	3.4	1.8	0.0	1.4
Unsig. Movement Delay, s/veh												
LnGrp Delay(d),s/veh	80.8	12.2	12.2	76.1	1.5	1.4	73.3	0.0	58.6	74.3	0.0	72.0
LnGrp LOS	F	B	B	E	A	A	E	A	E	E	A	E
Approach Vol, veh/h		1216			1369			265			82	
Approach Delay, s/veh		14.0			3.4			67.6			73.3	
Approach LOS		B			A			E			E	

Timer - Assigned Phs	1	2		4	5	6		8
Phs Duration (G+Y+Rc), s	7.4	92.6		19.7	7.6	92.3		10.3
Change Period (Y+Rc), s	4.0	5.0		5.0	4.0	5.0		5.0
Max Green Setting (Gmax), s	14.0	61.0		18.0	14.0	61.0		18.0
Max Q Clear Time (g_c+I1), s	4.3	2.0		13.6	4.6	24.1		5.4
Green Ext Time (p_c), s	0.0	46.1		0.5	0.0	27.3		0.2

Intersection Summary	
HCM 6th Ctrl Delay	15.5
HCM 6th LOS	B

Notes

User approved pedestrian interval to be less than phase max green.

Movement	EBL	EBT	EBR	WBL	WBT	WBR	NBL	NBT	NBR	SBL	SBT	SBR
Lane Configurations												
Traffic Volume (veh/h)	20	1140	86	21	1265	95	66	10	26	60	5	15
Future Volume (veh/h)	20	1140	86	21	1265	95	66	10	26	60	5	15
Initial Q (Qb), veh	0	0	0	0	0	0	0	0	0	0	0	0
Ped-Bike Adj(A_pbT)	1.00		1.00	1.00		1.00	1.00		1.00	1.00		1.00
Parking Bus, Adj	1.00	1.00	1.00	1.00	1.00	1.00	1.00	1.00	1.00	1.00	1.00	1.00
Work Zone On Approach		No			No			No			No	
Adj Sat Flow, veh/h/ln	1841	1841	1841	1870	1870	1870	1307	1307	1307	1826	1826	1826
Adj Flow Rate, veh/h	21	1175	89	22	1304	98	68	10	27	62	5	15
Peak Hour Factor	0.97	0.97	0.97	0.97	0.97	0.97	0.97	0.97	0.97	0.97	0.97	0.97
Percent Heavy Veh, %	4	4	4	2	2	2	40	40	40	5	5	5
Cap, veh/h	36	2358	178	38	2400	180	117	18	31	230	16	272
Arrive On Green	0.04	1.00	1.00	0.02	0.72	0.72	0.16	0.16	0.16	0.16	0.16	0.16
Sat Flow, veh/h	1753	3295	249	1781	3351	251	459	117	199	1134	106	1544
Grp Volume(v), veh/h	21	623	641	22	690	712	105	0	0	67	0	15
Grp Sat Flow(s),veh/h/ln	1753	1749	1796	1781	1777	1825	776	0	0	1240	0	1544
Q Serve(g_s), s	1.5	0.0	0.0	1.6	23.4	23.6	11.7	0.0	0.0	0.0	0.0	1.1
Cycle Q Clear(g_c), s	1.5	0.0	0.0	1.6	23.4	23.6	18.0	0.0	0.0	6.3	0.0	1.1
Prop In Lane	1.00		0.14	1.00		0.14	0.65		0.26	0.93		1.00
Lane Grp Cap(c), veh/h	36	1251	1285	38	1273	1307	166	0	0	246	0	272
V/C Ratio(X)	0.59	0.50	0.50	0.59	0.54	0.54	0.63	0.00	0.00	0.27	0.00	0.06
Avail Cap(c_a), veh/h	94	1251	1285	69	1273	1307	196	0	0	286	0	317
HCM Platoon Ratio	2.00	2.00	2.00	1.00	1.00	1.00	1.00	1.00	1.00	1.00	1.00	1.00
Upstream Filter(I)	0.79	0.79	0.79	1.00	1.00	1.00	1.00	0.00	0.00	1.00	0.00	1.00
Uniform Delay (d), s/veh	61.8	0.0	0.0	63.1	8.6	8.6	55.9	0.0	0.0	49.0	0.0	44.6
Incr Delay (d2), s/veh	11.4	1.1	1.1	13.6	1.7	1.6	4.9	0.0	0.0	0.6	0.0	0.1
Initial Q Delay(d3),s/veh	0.0	0.0	0.0	0.0	0.0	0.0	0.0	0.0	0.0	0.0	0.0	0.0
%ile BackOfQ(50%),veh/ln	0.8	0.4	0.4	0.9	8.6	8.9	3.6	0.0	0.0	2.0	0.0	0.4
Unsig. Movement Delay, s/veh												
LnGrp Delay(d),s/veh	73.2	1.1	1.1	76.7	10.2	10.2	60.8	0.0	0.0	49.6	0.0	44.7
LnGrp LOS	E	A	A	E	B	B	E	A	A	D	A	D
Approach Vol, veh/h		1285			1424			105			82	
Approach Delay, s/veh		2.3			11.2			60.8			48.7	
Approach LOS		A			B			E			D	

Timer - Assigned Phs	1	2		4	5	6		8
Phs Duration (G+Y+Rc), s	6.7	98.1		25.2	6.7	98.0		25.2
Change Period (Y+Rc), s	4.0	5.0		5.0	4.0	5.0		5.0
Max Green Setting (Gmax), s	7.0	85.0		24.0	5.0	87.0		24.0
Max Q Clear Time (g_c+I1), s	3.5	25.6		8.3	3.6	2.0		20.0
Green Ext Time (p_c), s	0.0	49.5		0.2	0.0	66.0		0.1

Intersection Summary	
HCM 6th Ctrl Delay	10.1
HCM 6th LOS	B

Notes

User approved pedestrian interval to be less than phase max green.

Movement	EBL	EBT	EBR	WBL	WBT	WBR	NBL	NBT	NBR	SBL	SBT	SBR
Lane Configurations												
Traffic Volume (veh/h)	10	1010	5	5	1365	10	10	0	5	10	0	5
Future Volume (veh/h)	10	1010	5	5	1365	10	10	0	5	10	0	5
Initial Q (Qb), veh	0	0	0	0	0	0	0	0	0	0	0	0
Ped-Bike Adj(A_pbT)	1.00		1.00	1.00		1.00	1.00		1.00	1.00		1.00
Parking Bus, Adj	1.00	1.00	1.00	1.00	1.00	1.00	1.00	1.00	1.00	1.00	1.00	1.00
Work Zone On Approach		No			No			No			No	
Adj Sat Flow, veh/h/ln	1796	1796	1796	1781	1781	1781	1796	1796	1796	1633	1633	1633
Adj Flow Rate, veh/h	11	1135	6	6	1534	11	11	0	6	11	0	6
Peak Hour Factor	0.89	0.89	0.89	0.89	0.89	0.89	0.89	0.89	0.89	0.89	0.89	0.89
Percent Heavy Veh, %	7	7	7	8	8	8	7	7	7	18	18	18
Cap, veh/h	24	2350	1048	13	2310	1031	110	0	49	110	0	45
Arrive On Green	0.01	0.69	0.69	0.01	0.68	0.68	0.03	0.00	0.03	0.03	0.00	0.03
Sat Flow, veh/h	1711	3413	1522	1697	3385	1510	0	0	1522	0	0	1384
Grp Volume(v), veh/h	11	1135	6	6	1534	11	11	0	6	11	0	6
Grp Sat Flow(s),veh/h/ln	1711	1706	1522	1697	1692	1510	0	0	1522	0	0	1384
Q Serve(g_s), s	0.4	10.2	0.1	0.2	17.3	0.2	0.0	0.0	0.3	0.0	0.0	0.3
Cycle Q Clear(g_c), s	0.4	10.2	0.1	0.2	17.3	0.2	2.1	0.0	0.3	2.1	0.0	0.3
Prop In Lane	1.00		1.00	1.00		1.00	1.00		1.00	1.00		1.00
Lane Grp Cap(c), veh/h	24	2350	1048	13	2310	1031	110	0	49	110	0	45
V/C Ratio(X)	0.46	0.48	0.01	0.45	0.66	0.01	0.10	0.00	0.12	0.10	0.00	0.13
Avail Cap(c_a), veh/h	130	2765	1233	129	2742	1223	705	0	719	407	0	379
HCM Platoon Ratio	1.00	1.00	1.00	1.00	1.00	1.00	1.00	1.00	1.00	1.00	1.00	1.00
Upstream Filter(I)	1.00	1.00	1.00	1.00	1.00	1.00	1.00	0.00	1.00	1.00	0.00	1.00
Uniform Delay (d), s/veh	32.1	4.8	3.2	32.4	6.0	3.3	32.8	0.0	30.9	32.8	0.0	30.9
Incr Delay (d2), s/veh	13.5	0.3	0.0	21.7	0.8	0.0	0.4	0.0	1.1	0.8	0.0	2.8
Initial Q Delay(d3),s/veh	0.0	0.0	0.0	0.0	0.0	0.0	0.0	0.0	0.0	0.0	0.0	0.0
%ile BackOfQ(50%),veh/ln	0.3	2.5	0.0	0.2	4.3	0.0	0.2	0.0	0.1	0.2	0.0	0.1
Unsig. Movement Delay, s/veh												
LnGrp Delay(d),s/veh	45.6	5.1	3.2	54.1	6.9	3.3	33.2	0.0	31.9	33.7	0.0	33.7
LnGrp LOS	D	A	A	D	A	A	C	A	C	C	A	C
Approach Vol, veh/h		1152			1551			17			17	
Approach Delay, s/veh		5.5			7.0			32.8			33.7	
Approach LOS		A			A			C			C	

Timer - Assigned Phs	1	2		4	5	6		8
Phs Duration (G+Y+Rc), s	7.3	51.2		7.1	6.9	51.6		7.1
Change Period (Y+Rc), s	6.4	6.4		5.0	6.4	6.4		5.0
Max Green Setting (Gmax), s	5.0	53.2		18.0	5.0	53.2		31.0
Max Q Clear Time (g_c+I1), s	2.4	19.3		4.1	2.2	12.2		4.1
Green Ext Time (p_c), s	0.0	25.5		0.0	0.0	20.8		0.0

Intersection Summary		
HCM 6th Ctrl Delay		6.7
HCM 6th LOS		A

Intersection	
Int Delay, s/veh	2.4

Movement	EBL	EBT	WBT	WBR	SBL	SBR
Lane Configurations						
Traffic Vol, veh/h	35	105	110	9	6	35
Future Vol, veh/h	35	105	110	9	6	35
Conflicting Peds, #/hr	0	0	0	0	0	0
Sign Control	Free	Free	Free	Free	Stop	Stop
RT Channelized	-	None	-	None	-	None
Storage Length	450	-	-	-	0	-
Veh in Median Storage, #	-	0	0	-	0	-
Grade, %	-	0	0	-	0	-
Peak Hour Factor	82	82	82	82	82	82
Heavy Vehicles, %	86	86	77	77	54	54
Mvmt Flow	43	128	134	11	7	43

Major/Minor	Major1		Major2		Minor2	
Conflicting Flow All	145	0	-	0	354	140
Stage 1	-	-	-	-	140	-
Stage 2	-	-	-	-	214	-
Critical Hdwy	4.96	-	-	-	6.94	6.74
Critical Hdwy Stg 1	-	-	-	-	5.94	-
Critical Hdwy Stg 2	-	-	-	-	5.94	-
Follow-up Hdwy	2.974	-	-	-	3.986	3.786
Pot Cap-1 Maneuver	1052	-	-	-	552	787
Stage 1	-	-	-	-	774	-
Stage 2	-	-	-	-	713	-
Platoon blocked, %		-	-	-		
Mov Cap-1 Maneuver	1052	-	-	-	529	787
Mov Cap-2 Maneuver	-	-	-	-	529	-
Stage 1	-	-	-	-	742	-
Stage 2	-	-	-	-	713	-

Approach	EB	WB	SB
HCM Control Delay, s	2.1	0	10.3
HCM LOS			B

Minor Lane/Major Mvmt	EBL	EBT	WBT	WBR	SBLn1
Capacity (veh/h)	1052	-	-	-	735
HCM Lane V/C Ratio	0.041	-	-	-	0.068
HCM Control Delay (s)	8.6	-	-	-	10.3
HCM Lane LOS	A	-	-	-	B
HCM 95th %tile Q(veh)	0.1	-	-	-	0.2

Intersection	
Int Delay, s/veh	4.5

Movement	EBL	EBT	EBR	WBL	WBT	WBR	NBL	NBT	NBR	SBL	SBT	SBR
Lane Configurations												
Traffic Vol, veh/h	35	125	50	15	120	5	55	0	10	5	10	35
Future Vol, veh/h	35	125	50	15	120	5	55	0	10	5	10	35
Conflicting Peds, #/hr	0	0	0	0	0	0	0	0	0	0	0	0
Sign Control	Free	Free	Free	Free	Free	Free	Stop	Stop	Stop	Stop	Stop	Stop
RT Channelized	-	-	None	-	-	None	-	-	None	-	-	None
Storage Length	-	-	-	-	-	-	-	-	-	-	-	-
Veh in Median Storage, #	-	0	-	-	0	-	-	0	-	-	0	-
Grade, %	-	0	-	-	0	-	-	0	-	-	0	-
Peak Hour Factor	82	82	82	82	82	82	82	82	82	82	82	82
Heavy Vehicles, %	36	36	36	30	30	30	35	35	35	91	91	91
Mvmt Flow	43	152	61	18	146	6	67	0	12	6	12	43

Major/Minor	Major1			Major2			Minor1			Minor2		
Conflicting Flow All	152	0	0	213	0	0	482	457	107	347	484	149
Stage 1	-	-	-	-	-	-	269	269	-	185	185	-
Stage 2	-	-	-	-	-	-	213	188	-	162	299	-
Critical Hdwy	4.64	-	-	4.55	-	-	7.825	7.025	7.425	8.665	7.865	7.565
Critical Hdwy Stg 1	-	-	-	-	-	-	7.025	6.025	-	7.465	6.865	-
Critical Hdwy Stg 2	-	-	-	-	-	-	6.625	6.025	-	7.865	6.865	-
Follow-up Hdwy	2.542	-	-	2.485	-	-	3.8325	4.3325	3.6325	4.3645	4.8645	4.1645
Pot Cap-1 Maneuver	1228	-	-	1190	-	-	421	443	838	438	350	688
Stage 1	-	-	-	-	-	-	639	620	-	627	588	-
Stage 2	-	-	-	-	-	-	709	678	-	638	509	-
Platoon blocked, %		-	-		-	-						
Mov Cap-1 Maneuver	1228	-	-	1190	-	-	368	418	838	413	330	688
Mov Cap-2 Maneuver	-	-	-	-	-	-	368	418	-	413	330	-
Stage 1	-	-	-	-	-	-	613	595	-	602	578	-
Stage 2	-	-	-	-	-	-	640	666	-	604	489	-

Approach	EB	WB	NB	SB
HCM Control Delay, s	1.4	0.9	16.1	12.6
HCM LOS			C	B

Minor Lane/Major Mvmt	NBLn1	EBL	EBT	EBR	WBL	WBT	WBR	SBLn1
Capacity (veh/h)	403	1228	-	-	1190	-	-	536
HCM Lane V/C Ratio	0.197	0.035	-	-	0.015	-	-	0.114
HCM Control Delay (s)	16.1	8	0.1	-	8.1	0	-	12.6
HCM Lane LOS	C	A	A	-	A	A	-	B
HCM 95th %tile Q(veh)	0.7	0.1	-	-	0	-	-	0.4

Movement	WBL	WBR	NBT	NBR	SBL	SBT
Lane Configurations						
Traffic Volume (veh/h)	73	142	442	96	124	451
Future Volume (veh/h)	73	142	442	96	124	451
Initial Q (Qb), veh	0	0	0	0	0	0
Ped-Bike Adj(A_pbT)	1.00	1.00		1.00	1.00	
Parking Bus, Adj	1.00	1.00	1.00	1.00	1.00	1.00
Work Zone On Approach	No		No			No
Adj Sat Flow, veh/h/ln	1233	1233	1796	1796	1678	1678
Adj Flow Rate, veh/h	79	154	480	104	135	490
Peak Hour Factor	0.92	0.92	0.92	0.92	0.92	0.92
Percent Heavy Veh, %	45	45	7	7	15	15
Cap, veh/h	89	174	540	117	273	896
Arrive On Green	0.24	0.24	0.38	0.38	0.07	0.53
Sat Flow, veh/h	367	715	1431	310	1598	1678
Grp Volume(v), veh/h	234	0	0	584	135	490
Grp Sat Flow(s),veh/h/ln	1086	0	0	1740	1598	1678
Q Serve(g_s), s	13.4	0.0	0.0	20.3	3.1	12.4
Cycle Q Clear(g_c), s	13.4	0.0	0.0	20.3	3.1	12.4
Prop In Lane	0.34	0.66		0.18	1.00	
Lane Grp Cap(c), veh/h	264	0	0	657	273	896
V/C Ratio(X)	0.89	0.00	0.00	0.89	0.49	0.55
Avail Cap(c_a), veh/h	398	0	0	727	284	958
HCM Platoon Ratio	1.00	1.00	1.00	1.00	1.00	1.00
Upstream Filter(I)	1.00	0.00	0.00	1.00	1.00	1.00
Uniform Delay (d), s/veh	23.6	0.0	0.0	18.9	14.2	9.9
Incr Delay (d2), s/veh	14.7	0.0	0.0	12.8	2.0	0.8
Initial Q Delay(d3),s/veh	0.0	0.0	0.0	0.0	0.0	0.0
%ile BackOfQ(50%),veh/ln	4.3	0.0	0.0	9.6	1.1	4.0
Unsig. Movement Delay, s/veh						
LnGrp Delay(d),s/veh	38.3	0.0	0.0	31.6	16.2	10.7
LnGrp LOS	D	A	A	C	B	B
Approach Vol, veh/h	234		584			625
Approach Delay, s/veh	38.3		31.6			11.9
Approach LOS	D		C			B

Timer - Assigned Phs	1	2				6	8
Phs Duration (G+Y+Rc), s	10.1	32.5				42.6	22.0
Change Period (Y+Rc), s	5.5	* 8.1				* 8.1	6.3
Max Green Setting (Gmax), s	5.1	* 27				* 37	23.7
Max Q Clear Time (g_c+I1), s	5.1	22.3				14.4	15.4
Green Ext Time (p_c), s	0.0	2.1				4.6	0.5

Intersection Summary	
HCM 6th Ctrl Delay	24.2
HCM 6th LOS	C

Notes

User approved pedestrian interval to be less than phase max green.

User approved volume balancing among the lanes for turning movement.

* HCM 6th computational engine requires equal clearance times for the phases crossing the barrier.

Movement	EBL	EBR	NBL	NBT	SBT	SBR
Lane Configurations						
Traffic Volume (vph)	70	71	91	435	373	90
Future Volume (vph)	70	71	91	435	373	90
Ideal Flow (vphpl)	1900	1900	1900	1900	1900	1900
Total Lost time (s)	5.0	5.0	6.5	6.5	6.5	6.5
Lane Util. Factor	1.00	1.00	1.00	1.00	1.00	1.00
Frt	1.00	0.85	1.00	1.00	1.00	0.85
Flt Protected	0.95	1.00	0.95	1.00	1.00	1.00
Satd. Flow (prot)	1671	1495	1719	1810	1792	1524
Flt Permitted	0.95	1.00	0.39	1.00	1.00	1.00
Satd. Flow (perm)	1671	1495	700	1810	1792	1524
Peak-hour factor, PHF	0.96	0.96	0.96	0.96	0.96	0.96
Adj. Flow (vph)	73	74	95	453	389	94
RTOR Reduction (vph)	0	66	0	0	0	44
Lane Group Flow (vph)	73	8	95	453	389	50
Heavy Vehicles (%)	8%	8%	5%	5%	6%	6%
Turn Type	custom	custom	pm+pt	NA	NA	Perm
Protected Phases	3	3	5	2	6	
Permitted Phases	4	4	2			6
Actuated Green, G (s)	5.5	5.5	34.8	34.8	22.8	22.8
Effective Green, g (s)	5.5	5.5	34.8	34.8	22.8	22.8
Actuated g/C Ratio	0.11	0.11	0.67	0.67	0.44	0.44
Clearance Time (s)	5.0	5.0	6.5	6.5	6.5	6.5
Vehicle Extension (s)	2.0	2.0	2.0	5.0	5.0	5.0
Lane Grp Cap (vph)	177	158	578	1215	788	670
v/s Ratio Prot	c0.04	0.01	0.02	c0.25	c0.22	
v/s Ratio Perm			0.09			0.03
v/c Ratio	0.41	0.05	0.16	0.37	0.49	0.07
Uniform Delay, d1	21.6	20.8	3.6	3.7	10.4	8.4
Progression Factor	1.00	1.00	1.00	1.00	1.00	1.00
Incremental Delay, d2	0.6	0.0	0.0	0.4	1.0	0.1
Delay (s)	22.2	20.8	3.7	4.1	11.4	8.5
Level of Service	C	C	A	A	B	A
Approach Delay (s)	21.5			4.1	10.8	
Approach LOS	C			A	B	

Intersection Summary			
HCM 2000 Control Delay	9.0	HCM 2000 Level of Service	A
HCM 2000 Volume to Capacity ratio	0.55		
Actuated Cycle Length (s)	51.8	Sum of lost time (s)	21.0
Intersection Capacity Utilization	43.8%	ICU Level of Service	A
Analysis Period (min)	15		
c Critical Lane Group			

Movement	EBL	EBR	NBL	NBT	SBT	SBR
Lane Configurations						
Traffic Volume (vph)	176	10	10	350	300	144
Future Volume (vph)	176	10	10	350	300	144
Ideal Flow (vphpl)	1900	1900	1900	1900	1900	1900
Total Lost time (s)	5.0	5.0	6.0	6.0	6.0	5.0
Lane Util. Factor	1.00	1.00	1.00	1.00	1.00	1.00
Frpb, ped/bikes	1.00	1.00	1.00	1.00	1.00	0.99
Flpb, ped/bikes	1.00	1.00	1.00	1.00	1.00	1.00
Frt	1.00	0.85	1.00	1.00	1.00	0.85
Flt Protected	0.95	1.00	0.95	1.00	1.00	1.00
Satd. Flow (prot)	1671	1495	1736	1827	1792	1506
Flt Permitted	0.95	1.00	0.39	1.00	1.00	1.00
Satd. Flow (perm)	1671	1495	707	1827	1792	1506
Peak-hour factor, PHF	0.95	0.95	0.95	0.95	0.95	0.95
Adj. Flow (vph)	185	11	11	368	316	152
RTOR Reduction (vph)	0	8	0	0	0	67
Lane Group Flow (vph)	185	3	11	368	316	85
Confl. Bikes (#/hr)						1
Heavy Vehicles (%)	8%	8%	4%	4%	6%	6%
Turn Type	custom	custom	pm+pt	NA	NA	pm+ov
Protected Phases	3	3	5	2	6	3
Permitted Phases	4	4	2			6
Actuated Green, G (s)	9.9	9.9	19.5	19.5	12.8	22.7
Effective Green, g (s)	9.9	9.9	19.5	19.5	12.8	22.7
Actuated g/C Ratio	0.25	0.25	0.48	0.48	0.32	0.56
Clearance Time (s)	5.0	5.0	6.0	6.0	6.0	5.0
Vehicle Extension (s)	2.0	2.0	2.0	2.0	2.0	2.0
Lane Grp Cap (vph)	409	366	359	881	567	846
v/s Ratio Prot	c0.11	0.00	0.00	c0.20	c0.18	0.02
v/s Ratio Perm			0.01			0.03
v/c Ratio	0.45	0.01	0.03	0.42	0.56	0.10
Uniform Delay, d1	12.9	11.5	5.9	6.8	11.4	4.1
Progression Factor	1.00	1.00	1.00	1.00	1.00	1.00
Incremental Delay, d2	0.3	0.0	0.0	0.1	0.7	0.0
Delay (s)	13.2	11.5	5.9	6.9	12.1	4.1
Level of Service	B	B	A	A	B	A
Approach Delay (s)	13.1			6.9	9.5	
Approach LOS	B			A	A	

Intersection Summary			
HCM 2000 Control Delay	9.2	HCM 2000 Level of Service	A
HCM 2000 Volume to Capacity ratio	0.65		
Actuated Cycle Length (s)	40.4	Sum of lost time (s)	20.0
Intersection Capacity Utilization	37.3%	ICU Level of Service	A
Analysis Period (min)	15		

c Critical Lane Group

Intersection	
Int Delay, s/veh	1.1

Movement	EBL	EBT	EBR	WBL	WBT	WBR	NBL	NBT	NBR	SBL	SBT	SBR
Lane Configurations												
Traffic Vol, veh/h	0	0	0	25	0	15	20	235	0	0	105	170
Future Vol, veh/h	0	0	0	25	0	15	20	235	0	0	105	170
Conflicting Peds, #/hr	0	0	0	0	0	0	0	0	0	0	0	0
Sign Control	Stop	Stop	Stop	Stop	Stop	Stop	Free	Free	Free	Free	Free	Free
RT Channelized	-	-	None	-	-	None	-	-	None	-	-	None
Storage Length	-	-	-	-	-	500	175	-	-	-	-	375
Veh in Median Storage, #	-	1	-	-	0	-	-	0	-	-	0	-
Grade, %	-	0	-	-	0	-	-	0	-	-	0	-
Peak Hour Factor	92	92	92	92	92	92	92	92	92	92	92	92
Heavy Vehicles, %	0	0	0	7	7	7	6	6	6	4	4	4
Mvmt Flow	0	0	0	27	0	16	22	255	0	0	114	185

Major/Minor	Minor1		Major1			Major2			
Conflicting Flow All	506	598	255	299	0	-	-	-	0
Stage 1	299	299	-	-	-	-	-	-	-
Stage 2	207	299	-	-	-	-	-	-	-
Critical Hdwy	6.47	6.57	6.27	4.16	-	-	-	-	-
Critical Hdwy Stg 1	5.47	5.57	-	-	-	-	-	-	-
Critical Hdwy Stg 2	5.47	5.57	-	-	-	-	-	-	-
Follow-up Hdwy	3.563	4.063	3.363	2.254	-	-	-	-	-
Pot Cap-1 Maneuver	517	409	772	1240	-	0	0	-	-
Stage 1	741	657	-	-	-	0	0	-	-
Stage 2	816	657	-	-	-	0	0	-	-
Platoon blocked, %					-			-	-
Mov Cap-1 Maneuver	508	0	772	1240	-	-	-	-	-
Mov Cap-2 Maneuver	508	0	-	-	-	-	-	-	-
Stage 1	728	0	-	-	-	-	-	-	-
Stage 2	816	0	-	-	-	-	-	-	-

Approach	WB	NB	SB
HCM Control Delay, s	11.5	0.6	0
HCM LOS	B		

Minor Lane/Major Mvmt	NBL	NBT	WBLn1	WBLn2	SBT	SBR
Capacity (veh/h)	1240	-	508	772	-	-
HCM Lane V/C Ratio	0.018	-	0.053	0.021	-	-
HCM Control Delay (s)	8	-	12.5	9.8	-	-
HCM Lane LOS	A	-	B	A	-	-
HCM 95th %tile Q(veh)	0.1	-	0.2	0.1	-	-

Movement	EBL	EBR	NBL	NBT	SBT	SBR
Lane Configurations						
Traffic Volume (veh/h)	160	10	25	115	120	15
Future Volume (veh/h)	160	10	25	115	120	15
Initial Q (Qb), veh	0	0	0	0	0	0
Ped-Bike Adj(A_pbT)	1.00	1.00	1.00			0.98
Parking Bus, Adj	1.00	1.00	1.00	1.00	1.00	1.00
Work Zone On Approach	No			No	No	
Adj Sat Flow, veh/h/ln	1841	1841	1811	1811	1752	1752
Adj Flow Rate, veh/h	184	11	29	132	138	17
Peak Hour Factor	0.87	0.87	0.87	0.87	0.87	0.87
Percent Heavy Veh, %	4	4	6	6	10	10
Cap, veh/h	390	347	231	269	305	38
Arrive On Green	0.22	0.22	0.20	0.20	0.20	0.20
Sat Flow, veh/h	1753	1560	180	1345	1525	188
Grp Volume(v), veh/h	184	11	161	0	0	155
Grp Sat Flow(s),veh/h/ln	1753	1560	1524	0	0	1713
Q Serve(g_s), s	2.0	0.1	0.5	0.0	0.0	1.7
Cycle Q Clear(g_c), s	2.0	0.1	2.3	0.0	0.0	1.7
Prop In Lane	1.00	1.00	0.18			0.11
Lane Grp Cap(c), veh/h	390	347	500	0	0	343
V/C Ratio(X)	0.47	0.03	0.32	0.00	0.00	0.45
Avail Cap(c_a), veh/h	3914	3483	4626	0	0	2647
HCM Platoon Ratio	1.00	1.00	1.00	1.00	1.00	1.00
Upstream Filter(I)	1.00	1.00	1.00	0.00	0.00	1.00
Uniform Delay (d), s/veh	7.4	6.6	7.8	0.0	0.0	7.7
Incr Delay (d2), s/veh	0.9	0.0	0.8	0.0	0.0	2.0
Initial Q Delay(d3),s/veh	0.0	0.0	0.0	0.0	0.0	0.0
%ile BackOfQ(50%),veh/ln	0.5	0.0	0.5	0.0	0.0	0.5
Unsig. Movement Delay, s/veh						
LnGrp Delay(d),s/veh	8.3	6.7	8.6	0.0	0.0	9.7
LnGrp LOS	A	A	A	A	A	A
Approach Vol, veh/h	195			161	155	
Approach Delay, s/veh	8.2			8.6	9.7	
Approach LOS	A			A	A	

Timer - Assigned Phs		2		4		6
Phs Duration (G+Y+Rc), s		10.7		11.2		10.7
Change Period (Y+Rc), s		6.3		6.3		6.3
Max Green Setting (Gmax), s		58.7		48.7		33.7
Max Q Clear Time (g_c+I1), s		4.3		4.0		3.7
Green Ext Time (p_c), s		2.1		0.6		1.7

Intersection Summary	
HCM 6th Ctrl Delay	8.7
HCM 6th LOS	A

Movement	EBL	EBT	EBR	WBL	WBT	WBR	NBL	NBT	NBR	SBL	SBT	SBR
Lane Configurations												
Traffic Volume (veh/h)	100	10	15	5	0	10	15	574	10	15	555	95
Future Volume (veh/h)	100	10	15	5	0	10	15	574	10	15	555	95
Initial Q (Qb), veh	0	0	0	0	0	0	0	0	0	0	0	0
Ped-Bike Adj(A_pbT)	1.00		0.98	1.00		1.00	1.00		0.98	1.00		1.00
Parking Bus, Adj	1.00	1.00	1.00	1.00	1.00	1.00	1.00	1.00	1.00	1.00	1.00	1.00
Work Zone On Approach		No			No			No			No	
Adj Sat Flow, veh/h/ln	1856	1856	1856	1559	1559	1559	1663	1663	1663	1678	1678	1678
Adj Flow Rate, veh/h	105	11	16	5	0	11	16	604	11	16	584	100
Peak Hour Factor	0.95	0.95	0.95	0.95	0.95	0.95	0.95	0.95	0.95	0.95	0.95	0.95
Percent Heavy Veh, %	3	3	3	23	23	23	16	16	16	15	15	15
Cap, veh/h	232	17	21	303	0	273	269	787	14	258	812	688
Arrive On Green	0.12	0.12	0.12	0.00	0.00	0.21	0.01	0.48	0.48	0.01	0.48	0.48
Sat Flow, veh/h	1125	145	175	1485	0	1321	1584	1627	30	1598	1678	1422
Grp Volume(v), veh/h	132	0	0	5	0	11	16	0	615	16	584	100
Grp Sat Flow(s),veh/h/ln	1445	0	0	1485	0	1321	1584	0	1657	1598	1678	1422
Q Serve(g_s), s	5.7	0.0	0.0	0.2	0.0	0.4	0.3	0.0	19.9	0.3	18.0	2.6
Cycle Q Clear(g_c), s	5.8	0.0	0.0	0.2	0.0	0.4	0.3	0.0	19.9	0.3	18.0	2.6
Prop In Lane	0.80		0.12	1.00		1.00	1.00		0.02	1.00		1.00
Lane Grp Cap(c), veh/h	270	0	0	303	0	273	269	0	802	258	812	688
V/C Ratio(X)	0.49	0.00	0.00	0.02	0.00	0.04	0.06	0.00	0.77	0.06	0.72	0.15
Avail Cap(c_a), veh/h	498	0	0	626	0	891	844	0	1467	716	1357	1150
HCM Platoon Ratio	1.00	1.00	1.00	1.00	1.00	1.00	1.00	1.00	1.00	1.00	1.00	1.00
Upstream Filter(I)	1.00	0.00	0.00	1.00	0.00	1.00	1.00	0.00	1.00	1.00	1.00	1.00
Uniform Delay (d), s/veh	27.9	0.0	0.0	23.5	0.0	20.8	11.0	0.0	13.9	11.5	13.4	9.4
Incr Delay (d2), s/veh	1.9	0.0	0.0	0.0	0.0	0.1	0.1	0.0	3.3	0.1	2.6	0.2
Initial Q Delay(d3),s/veh	0.0	0.0	0.0	0.0	0.0	0.0	0.0	0.0	0.0	0.0	0.0	0.0
%ile BackOfQ(50%),veh/ln	2.1	0.0	0.0	0.1	0.0	0.1	0.1	0.0	7.1	0.1	6.4	0.7
Unsig. Movement Delay, s/veh												
LnGrp Delay(d),s/veh	29.9	0.0	0.0	23.6	0.0	20.8	11.1	0.0	17.2	11.6	15.9	9.6
LnGrp LOS	C	A	A	C	A	C	B	A	B	B	B	A
Approach Vol, veh/h		132			16			631			700	
Approach Delay, s/veh		29.9			21.7			17.0			14.9	
Approach LOS		C			C			B			B	

Timer - Assigned Phs	1	2	3	4	5	6		8
Phs Duration (G+Y+Rc), s	6.3	38.7	5.8	14.6	6.3	38.7		20.4
Change Period (Y+Rc), s	5.5	7.1	5.5	6.9	5.5	7.1		* 6.9
Max Green Setting (Gmax), s	19.5	57.9	14.5	18.1	24.5	52.9		* 44
Max Q Clear Time (g_c+I1), s	2.3	21.9	2.2	7.8	2.3	20.0		2.4
Green Ext Time (p_c), s	0.0	9.7	0.0	0.6	0.0	9.7		0.0

Intersection Summary	
HCM 6th Ctrl Delay	17.2
HCM 6th LOS	B

Notes

* HCM 6th computational engine requires equal clearance times for the phases crossing the barrier.

Movement	EBL	EBT	EBR	WBL	WBT	WBR	NBL	NBT	NBR	SBL	SBT	SBR
Lane Configurations												
Traffic Volume (veh/h)	340	615	65	10	559	130	65	40	15	145	40	335
Future Volume (veh/h)	340	615	65	10	559	130	65	40	15	145	40	335
Initial Q (Qb), veh	0	0	0	0	0	0	0	0	0	0	0	0
Ped-Bike Adj(A_pbT)	1.00		1.00	1.00		1.00	1.00		0.99	1.00		0.99
Parking Bus, Adj	1.00	1.00	1.00	1.00	1.00	1.00	1.00	1.00	1.00	1.00	1.00	1.00
Work Zone On Approach		No			No			No			No	
Adj Sat Flow, veh/h/ln	1767	1767	1767	1767	1767	1767	1885	1885	1885	1826	1826	1826
Adj Flow Rate, veh/h	351	634	67	10	576	134	67	41	15	149	41	345
Peak Hour Factor	0.97	0.97	0.97	0.97	0.97	0.97	0.97	0.97	0.97	0.97	0.97	0.97
Percent Heavy Veh, %	9	9	9	9	9	9	1	1	1	5	5	5
Cap, veh/h	383	1930	859	16	1197	533	86	200	73	176	376	669
Arrive On Green	0.23	0.57	0.57	0.01	0.36	0.36	0.05	0.15	0.15	0.10	0.21	0.21
Sat Flow, veh/h	1682	3357	1495	1682	3357	1493	1795	1314	481	1739	1826	1538
Grp Volume(v), veh/h	351	634	67	10	576	134	67	0	56	149	41	345
Grp Sat Flow(s),veh/h/ln	1682	1678	1495	1682	1678	1493	1795	0	1794	1739	1826	1538
Q Serve(g_s), s	25.1	12.2	2.5	0.7	16.5	7.8	4.6	0.0	3.4	10.4	2.3	20.2
Cycle Q Clear(g_c), s	25.1	12.2	2.5	0.7	16.5	7.8	4.6	0.0	3.4	10.4	2.3	20.2
Prop In Lane	1.00		1.00	1.00		1.00	1.00		0.27	1.00		1.00
Lane Grp Cap(c), veh/h	383	1930	859	16	1197	533	86	0	273	176	376	669
V/C Ratio(X)	0.92	0.33	0.08	0.63	0.48	0.25	0.78	0.00	0.20	0.85	0.11	0.52
Avail Cap(c_a), veh/h	572	1930	859	54	1197	533	160	0	523	268	651	900
HCM Platoon Ratio	1.00	1.00	1.00	1.00	1.00	1.00	1.00	1.00	1.00	1.00	1.00	1.00
Upstream Filter(I)	1.00	1.00	1.00	1.00	1.00	1.00	1.00	0.00	1.00	1.00	1.00	1.00
Uniform Delay (d), s/veh	46.6	13.8	11.7	61.0	30.8	28.1	58.1	0.0	45.8	54.5	39.9	25.6
Incr Delay (d2), s/veh	14.7	0.5	0.2	34.9	1.4	1.1	13.8	0.0	0.4	14.2	0.1	0.6
Initial Q Delay(d3),s/veh	0.0	0.0	0.0	0.0	0.0	0.0	0.0	0.0	0.0	0.0	0.0	0.0
%ile BackOfQ(50%),veh/ln	12.0	4.7	0.9	0.5	6.9	3.0	2.4	0.0	1.5	5.2	1.0	7.5
Unsig. Movement Delay, s/veh												
LnGrp Delay(d),s/veh	61.2	14.2	11.9	95.8	32.2	29.2	71.9	0.0	46.2	68.7	40.0	26.2
LnGrp LOS	E	B	B	F	C	C	E	A	D	E	D	C
Approach Vol, veh/h		1052			720			123			535	
Approach Delay, s/veh		29.7			32.6			60.2			39.1	
Approach LOS		C			C			E			D	

Timer - Assigned Phs	1	2	3	4	5	6	7	8
Phs Duration (G+Y+Rc), s	6.2	76.0	10.9	30.4	33.1	49.1	17.5	23.8
Change Period (Y+Rc), s	5.0	5.0	5.0	5.0	5.0	5.0	5.0	5.0
Max Green Setting (Gmax), s	4.0	71.0	11.0	44.0	42.0	33.0	19.0	36.0
Max Q Clear Time (g_c+I1), s	2.7	14.2	6.6	22.2	27.1	18.5	12.4	5.4
Green Ext Time (p_c), s	0.0	5.4	0.0	1.4	1.0	3.8	0.2	0.3

Intersection Summary	
HCM 6th Ctrl Delay	34.2
HCM 6th LOS	C

Movement	EBT	EBR	WBL	WBT	NBL	NBR
Lane Configurations						
Traffic Volume (veh/h)	720	416	229	730	496	305
Future Volume (veh/h)	720	416	229	730	496	305
Initial Q (Qb), veh	0	0	0	0	0	0
Ped-Bike Adj(A_pbT)		1.00	1.00		1.00	1.00
Parking Bus, Adj	1.00	1.00	1.00	1.00	1.00	1.00
Work Zone On Approach	No			No	No	
Adj Sat Flow, veh/h/ln	1737	1737	1722	1722	1856	1856
Adj Flow Rate, veh/h	742	0	236	753	511	314
Peak Hour Factor	0.97	0.97	0.97	0.97	0.97	0.97
Percent Heavy Veh, %	11	11	12	12	3	3
Cap, veh/h	2693		263	2522	519	490
Arrive On Green	0.57	0.00	0.16	0.77	0.15	0.15
Sat Flow, veh/h	4898	1472	1640	3358	3428	1572
Grp Volume(v), veh/h	742	0	236	753	511	314
Grp Sat Flow(s),veh/h/ln	1581	1472	1640	1636	1714	1572
Q Serve(g_s), s	12.0	0.0	21.2	10.3	22.3	22.7
Cycle Q Clear(g_c), s	12.0	0.0	21.2	10.3	22.3	22.7
Prop In Lane		1.00	1.00		1.00	1.00
Lane Grp Cap(c), veh/h	2693		263	2522	519	490
V/C Ratio(X)	0.28		0.90	0.30	0.98	0.64
Avail Cap(c_a), veh/h	2693		477	2522	519	490
HCM Platoon Ratio	1.00	1.00	1.00	1.00	1.00	1.00
Upstream Filter(I)	1.00	0.00	0.93	0.93	1.00	1.00
Uniform Delay (d), s/veh	16.6	0.0	61.8	5.1	63.5	44.4
Incr Delay (d2), s/veh	0.3	0.0	11.7	0.3	35.6	3.2
Initial Q Delay(d3),s/veh	0.0	0.0	0.0	0.0	0.0	0.0
%ile BackOfQ(50%),veh/ln	4.5	0.0	9.7	3.4	12.3	10.6
Unsig. Movement Delay, s/veh						
LnGrp Delay(d),s/veh	16.9	0.0	73.5	5.4	99.0	47.7
LnGrp LOS	B		E	A	F	D
Approach Vol, veh/h	742	A		989	825	
Approach Delay, s/veh	16.9			21.6	79.5	
Approach LOS	B			C	E	

Timer - Assigned Phs	1	2				6	8
Phs Duration (G+Y+Rc), s	30.4	91.6				122.0	28.0
Change Period (Y+Rc), s	6.4	6.4				6.4	5.3
Max Green Setting (Gmax), s	43.6	65.6				115.6	22.7
Max Q Clear Time (g_c+I1), s	23.2	14.0				12.3	24.7
Green Ext Time (p_c), s	0.9	12.5				14.0	0.0

Intersection Summary	
HCM 6th Ctrl Delay	38.9
HCM 6th LOS	D

Notes

User approved pedestrian interval to be less than phase max green.

Unsignalized Delay for [EBR] is excluded from calculations of the approach delay and intersection delay.

Movement	EBL	EBT	EBR	WBL	WBT	WBR	NBL	NBT	NBR	SBL	SBT	SBR
Lane Configurations												
Traffic Volume (vph)	135	776	0	0	1003	498	0	0	391	0	0	642
Future Volume (vph)	135	776	0	0	1003	498	0	0	391	0	0	642
Ideal Flow (vphpl)	1900	1900	1900	1900	1900	1900	1900	1900	1900	1900	1900	1900
Total Lost time (s)	5.0	5.0			5.0	5.0			4.0			5.0
Lane Util. Factor	1.00	0.95			0.95	1.00			1.00			1.00
Frpb, ped/bikes	1.00	1.00			1.00	1.00			1.00			1.00
Flpb, ped/bikes	1.00	1.00			1.00	1.00			1.00			1.00
Frt	1.00	1.00			1.00	0.85			0.86			0.86
Flt Protected	0.95	1.00			1.00	1.00			1.00			1.00
Satd. Flow (prot)	1687	3374			3374	1509			1508			1596
Flt Permitted	0.95	1.00			1.00	1.00			1.00			1.00
Satd. Flow (perm)	1687	3374			3374	1509			1508			1596
Peak-hour factor, PHF	0.96	0.96	0.96	0.96	0.96	0.96	0.96	0.96	0.96	0.96	0.96	0.96
Adj. Flow (vph)	141	808	0	0	1045	519	0	0	407	0	0	669
RTOR Reduction (vph)	0	0	0	0	0	0	0	0	0	0	0	36
Lane Group Flow (vph)	141	808	0	0	1045	519	0	0	407	0	0	633
Confl. Peds. (#/hr)	4					4						
Heavy Vehicles (%)	7%	7%	7%	7%	7%	7%	9%	9%	9%	3%	3%	3%
Turn Type	Prot	NA			NA	custom			Free			pt+ov
Protected Phases	1!	1 6 8			6	4 6 8!						1 8
Permitted Phases									Free			8 1
Actuated Green, G (s)	34.5	100.0			55.5	100.0			100.0			34.5
Effective Green, g (s)	34.5	100.0			55.5	100.0			100.0			34.5
Actuated g/C Ratio	0.34	1.00			0.56	1.00			1.00			0.34
Clearance Time (s)	5.0				5.0							
Vehicle Extension (s)	2.0				2.0							
Lane Grp Cap (vph)	582	3374			1872	1509			1508			550
v/s Ratio Prot	0.08	0.24			c0.31	0.34						c0.40
v/s Ratio Perm									0.27			
v/c Ratio	0.24	0.24			0.56	0.34			0.27			1.15
Uniform Delay, d1	23.4	0.0			14.3	0.0			0.0			32.8
Progression Factor	0.75	1.00			1.00	1.00			1.00			1.00
Incremental Delay, d2	0.8	0.0			1.2	0.1			0.4			87.3
Delay (s)	18.4	0.0			15.6	0.1			0.4			120.1
Level of Service	B	A			B	A			A			F
Approach Delay (s)		2.7			10.4			0.4			120.1	
Approach LOS		A			B			A			F	

Intersection Summary			
HCM 2000 Control Delay	27.7	HCM 2000 Level of Service	C
HCM 2000 Volume to Capacity ratio	0.81		
Actuated Cycle Length (s)	100.0	Sum of lost time (s)	13.0
Intersection Capacity Utilization	75.8%	ICU Level of Service	D
Analysis Period (min)	15		

! Phase conflict between lane groups.
c Critical Lane Group

12: SB I-405/Sunset Blvd. & Bronson Way/Maple Valley Rd.

Design Year Option 3 MD

Movement	EBL	EBT	EBR	WBL	WBT	WBR	NBL	NBT	NBR	SBL	SBT	SBR
Lane Configurations												
Traffic Volume (vph)	501	345	75	430	325	885	0	0	0	572	704	440
Future Volume (vph)	501	345	75	430	325	885	0	0	0	572	704	440
Ideal Flow (vphpl)	1900	1900	1900	1900	1900	1900	1900	1900	1900	1900	1900	1900
Total Lost time (s)	5.0	5.0		9.0	9.0	4.0				5.0	5.0	5.0
Lane Util. Factor	0.97	0.95		1.00	0.95	1.00				0.97	0.95	0.95
Frt	1.00	0.97		1.00	1.00	0.85				1.00	1.00	0.85
Flt Protected	0.95	1.00		0.95	1.00	1.00				0.95	1.00	1.00
Satd. Flow (prot)	3400	3410		1687	3374	1509				3273	1687	1434
Flt Permitted	0.95	1.00		0.95	1.00	1.00				0.95	1.00	1.00
Satd. Flow (perm)	3400	3410		1687	3374	1509				3273	1687	1434
Peak-hour factor, PHF	0.98	0.98	0.98	0.98	0.98	0.98	0.98	0.98	0.98	0.98	0.98	0.98
Adj. Flow (vph)	511	352	77	439	332	903	0	0	0	584	718	449
RTOR Reduction (vph)	0	19	0	0	0	6	0	0	0	0	0	0
Lane Group Flow (vph)	511	410	0	439	332	897	0	0	0	584	718	449
Heavy Vehicles (%)	3%	3%	3%	7%	7%	7%	0%	0%	0%	7%	7%	7%
Turn Type	Split	NA		Split	NA	custom				Split	NA	custom
Protected Phases	2	2		3	3	7				4	4	4 5
Permitted Phases						7						
Actuated Green, G (s)	18.0	18.0		28.6	28.6	73.0				34.4	34.4	57.4
Effective Green, g (s)	18.0	18.0		28.6	28.6	73.0				34.4	34.4	57.4
Actuated g/C Ratio	0.18	0.18		0.29	0.29	0.73				0.34	0.34	0.57
Clearance Time (s)	5.0	5.0		9.0	9.0	4.0				5.0	5.0	
Vehicle Extension (s)	4.0	4.0		3.0	3.0	3.0				3.0	3.0	
Lane Grp Cap (vph)	612	613		482	964	1101				1125	580	823
v/s Ratio Prot	c0.15	0.12		0.26	0.10	c0.59				0.18	c0.43	0.31
v/s Ratio Perm												
v/c Ratio	0.83	0.67		0.91	0.34	0.81				0.52	1.24	0.55
Uniform Delay, d1	39.6	38.2		34.5	28.3	9.0				26.2	32.8	13.2
Progression Factor	1.00	1.00		0.76	0.72	1.41				0.55	0.57	0.46
Incremental Delay, d2	12.7	5.7		16.4	0.2	3.4				0.3	117.1	0.5
Delay (s)	52.3	43.9		42.5	20.5	16.1				14.6	135.6	6.6
Level of Service	D	D		D	C	B				B	F	A
Approach Delay (s)		48.5			23.9			0.0			62.2	
Approach LOS		D			C			A			E	

Intersection Summary			
HCM 2000 Control Delay	44.5	HCM 2000 Level of Service	D
HCM 2000 Volume to Capacity ratio	1.06		
Actuated Cycle Length (s)	100.0	Sum of lost time (s)	19.0
Intersection Capacity Utilization	97.5%	ICU Level of Service	F
Analysis Period (min)	15		
c Critical Lane Group			

Movement	EBL	EBT	EBR	WBL	WBT	WBR	NBL	NBT	NBR	SBL	SBT	SBR
Lane Configurations												
Traffic Volume (veh/h)	185	260	155	807	195	206	95	600	696	181	749	95
Future Volume (veh/h)	185	260	155	807	195	206	95	600	696	181	749	95
Initial Q (Qb), veh	0	0	0	0	0	0	0	0	0	0	0	0
Ped-Bike Adj(A_pbT)	1.00		1.00	1.00		1.00	1.00		1.00	1.00		1.00
Parking Bus, Adj	1.00	1.00	1.00	1.00	1.00	1.00	1.00	1.00	1.00	1.00	1.00	1.00
Work Zone On Approach		No			No			No			No	
Adj Sat Flow, veh/h/ln	1856	1856	1856	1856	1856	1856	1841	1841	1841	1767	1767	1767
Adj Flow Rate, veh/h	153	321	0	760	301	0	98	619	0	187	772	0
Peak Hour Factor	0.97	0.97	0.97	0.97	0.97	0.97	0.97	0.97	0.97	0.97	0.97	0.97
Percent Heavy Veh, %	3	3	3	3	3	3	4	4	4	9	9	9
Cap, veh/h	258	542		973	511		126	905		334	1528	
Arrive On Green	0.15	0.15	0.00	0.09	0.09	0.00	0.02	0.06	0.00	0.20	0.32	0.00
Sat Flow, veh/h	1767	3711	1572	3534	1856	1572	1753	5025	1560	1682	4823	1497
Grp Volume(v), veh/h	153	321	0	760	301	0	98	619	0	187	772	0
Grp Sat Flow(s),veh/h/ln	1767	1856	1572	1767	1856	1572	1753	1675	1560	1682	1608	1497
Q Serve(g_s), s	8.1	8.1	0.0	21.0	15.6	0.0	5.6	12.1	0.0	10.0	13.0	0.0
Cycle Q Clear(g_c), s	8.1	8.1	0.0	21.0	15.6	0.0	5.6	12.1	0.0	10.0	13.0	0.0
Prop In Lane	1.00		1.00	1.00		1.00	1.00		1.00	1.00		1.00
Lane Grp Cap(c), veh/h	258	542		973	511		126	905		334	1528	
V/C Ratio(X)	0.59	0.59		0.78	0.59		0.78	0.68		0.56	0.51	
Avail Cap(c_a), veh/h	300	631		990	520		210	905		334	1528	
HCM Platoon Ratio	1.00	1.00	1.00	0.33	0.33	0.33	0.33	0.33	0.33	1.00	1.00	1.00
Upstream Filter(I)	1.00	1.00	0.00	0.87	0.87	0.00	0.46	0.46	0.00	1.00	1.00	0.00
Uniform Delay (d), s/veh	39.9	39.9	0.0	42.5	40.0	0.0	48.0	44.2	0.0	36.1	27.8	0.0
Incr Delay (d2), s/veh	9.7	4.7	0.0	4.9	3.5	0.0	6.7	2.0	0.0	2.6	1.2	0.0
Initial Q Delay(d3),s/veh	0.0	0.0	0.0	0.0	0.0	0.0	0.0	0.0	0.0	0.0	0.0	0.0
%ile BackOfQ(50%),veh/ln	4.1	4.0	0.0	10.6	8.2	0.0	2.7	5.6	0.0	4.3	5.1	0.0
Unsig. Movement Delay, s/veh												
LnGrp Delay(d),s/veh	49.6	44.6	0.0	47.4	43.6	0.0	54.7	46.2	0.0	38.8	29.0	0.0
LnGrp LOS	D	D		D	D		D	D		D	C	
Approach Vol, veh/h		474	A		1061	A		717	A		959	A
Approach Delay, s/veh		46.2			46.3			47.4			30.9	
Approach LOS		D			D			D			C	

Timer - Assigned Phs		2	3	4		6	7	8				
Phs Duration (G+Y+Rc), s		32.5	11.2	36.7		19.6	24.9	23.0				
Change Period (Y+Rc), s		5.0	4.0	5.0		5.0	5.0	* 5				
Max Green Setting (Gmax), s		28.0	12.0	24.0		17.0	18.0	* 18				
Max Q Clear Time (g_c+I1), s		23.0	7.6	15.0		10.1	12.0	14.1				
Green Ext Time (p_c), s		4.5	0.1	6.1		4.4	0.4	2.2				

Intersection Summary	
HCM 6th Ctrl Delay	41.9
HCM 6th LOS	D

Notes

User approved pedestrian interval to be less than phase max green.

User approved volume balancing among the lanes for turning movement.

* HCM 6th computational engine requires equal clearance times for the phases crossing the barrier.

Movement	EBL	EBT	EBR	WBL	WBT	WBR	NBL	NBT	NBR	SBL	SBT	SBR
Lane Configurations												
Traffic Volume (veh/h)	80	1062	5	5	1093	5	15	0	5	10	0	95
Future Volume (veh/h)	80	1062	5	5	1093	5	15	0	5	10	0	95
Initial Q (Qb), veh	0	0	0	0	0	0	0	0	0	0	0	0
Ped-Bike Adj(A_pbT)	1.00		1.00	1.00		1.00	1.00		1.00	1.00		1.00
Parking Bus, Adj	1.00	1.00	1.00	1.00	1.00	1.00	1.00	1.00	1.00	1.00	1.00	1.00
Work Zone On Approach		No			No			No			No	
Adj Sat Flow, veh/h/ln	1841	1841	1841	1870	1870	1870	1900	1900	1900	1826	1826	1826
Adj Flow Rate, veh/h	82	1095	5	5	1127	5	15	0	5	10	0	98
Peak Hour Factor	0.97	0.97	0.97	0.97	0.97	0.97	0.97	0.97	0.97	0.97	0.97	0.97
Percent Heavy Veh, %	4	4	4	2	2	2	0	0	0	5	5	5
Cap, veh/h	105	2547	12	9	2391	11	169	0	122	182	0	129
Arrive On Green	0.08	0.95	0.95	0.01	0.66	0.66	0.08	0.00	0.08	0.08	0.00	0.08
Sat Flow, veh/h	1753	3570	16	1781	3628	16	1162	0	1465	1326	0	1547
Grp Volume(v), veh/h	82	536	564	5	552	580	15	0	5	10	0	98
Grp Sat Flow(s),veh/h/ln	1753	1749	1838	1781	1777	1867	1162	0	1465	1326	0	1547
Q Serve(g_s), s	4.6	2.6	2.6	0.3	15.4	15.4	1.1	0.0	0.3	0.7	0.0	6.2
Cycle Q Clear(g_c), s	4.6	2.6	2.6	0.3	15.4	15.4	2.1	0.0	0.3	1.0	0.0	6.2
Prop In Lane	1.00		0.01	1.00		0.01	1.00		1.00	1.00		1.00
Lane Grp Cap(c), veh/h	105	1248	1311	9	1171	1230	169	0	122	182	0	129
V/C Ratio(X)	0.78	0.43	0.43	0.54	0.47	0.47	0.09	0.00	0.04	0.05	0.00	0.76
Avail Cap(c_a), veh/h	200	1248	1311	78	1171	1230	341	0	314	362	0	331
HCM Platoon Ratio	1.33	1.33	1.33	1.00	1.00	1.00	1.00	1.00	1.00	1.00	1.00	1.00
Upstream Filter(I)	0.53	0.53	0.53	1.00	1.00	1.00	1.00	0.00	1.00	1.00	0.00	1.00
Uniform Delay (d), s/veh	45.4	0.8	0.8	49.6	8.4	8.4	43.4	0.0	42.2	42.6	0.0	44.9
Incr Delay (d2), s/veh	6.6	0.6	0.5	41.4	1.4	1.3	0.3	0.0	0.2	0.2	0.0	12.3
Initial Q Delay(d3),s/veh	0.0	0.0	0.0	0.0	0.0	0.0	0.0	0.0	0.0	0.0	0.0	0.0
%ile BackOfQ(50%),veh/ln	2.1	0.7	0.7	0.2	5.5	5.8	0.4	0.0	0.1	0.2	0.0	2.8
Unsig. Movement Delay, s/veh												
LnGrp Delay(d),s/veh	52.0	1.4	1.3	91.0	9.8	9.7	43.7	0.0	42.4	42.8	0.0	57.1
LnGrp LOS	D	A	A	F	A	A	D	A	D	D	A	E
Approach Vol, veh/h		1182			1137			20			108	
Approach Delay, s/veh		4.9			10.1			43.4			55.8	
Approach LOS		A			B			D			E	

Timer - Assigned Phs	1	2		4	5	6		8
Phs Duration (G+Y+Rc), s	12.6	72.5		14.9	7.1	78.0		14.9
Change Period (Y+Rc), s	6.6	6.6		6.6	6.6	6.6		6.6
Max Green Setting (Gmax), s	11.4	47.4		21.4	4.4	54.4		21.4
Max Q Clear Time (g_c+I1), s	6.6	17.4		4.1	2.3	4.6		8.2
Green Ext Time (p_c), s	0.1	28.4		0.0	0.0	12.1		0.4

Intersection Summary	
HCM 6th Ctrl Delay	9.9
HCM 6th LOS	A

Movement	EBL	EBT	EBR	WBL	WBT	WBR	NBL	NBT	NBR	SBL	SBT	SBR
Lane Configurations												
Traffic Volume (veh/h)	10	987	75	35	988	5	85	10	35	5	5	25
Future Volume (veh/h)	10	987	75	35	988	5	85	10	35	5	5	25
Initial Q (Qb), veh	0	0	0	0	0	0	0	0	0	0	0	0
Ped-Bike Adj(A_pbT)	1.00		1.00	1.00		1.00	1.00		1.00	1.00		0.99
Parking Bus, Adj	1.00	1.00	1.00	1.00	1.00	1.00	1.00	1.00	1.00	1.00	1.00	1.00
Work Zone On Approach		No			No			No			No	
Adj Sat Flow, veh/h/ln	1841	1841	1841	1811	1811	1811	1841	1841	1841	1900	1900	1900
Adj Flow Rate, veh/h	11	1050	80	37	1051	5	90	11	37	5	5	27
Peak Hour Factor	0.94	0.94	0.94	0.94	0.94	0.94	0.94	0.94	0.94	0.94	0.94	0.94
Percent Heavy Veh, %	4	4	4	6	6	6	4	4	4	0	0	0
Cap, veh/h	672	2211	168	55	1089	5	130	27	92	58	8	44
Arrive On Green	0.38	0.67	0.67	0.02	0.21	0.21	0.07	0.07	0.07	0.03	0.03	0.03
Sat Flow, veh/h	1753	3293	251	1725	3512	17	1753	369	1242	1810	256	1385
Grp Volume(v), veh/h	11	557	573	37	515	541	90	0	48	5	0	32
Grp Sat Flow(s),veh/h/ln	1753	1749	1796	1725	1721	1808	1753	0	1611	1810	0	1641
Q Serve(g_s), s	0.4	15.4	15.4	2.1	29.7	29.7	5.0	0.0	2.8	0.3	0.0	1.9
Cycle Q Clear(g_c), s	0.4	15.4	15.4	2.1	29.7	29.7	5.0	0.0	2.8	0.3	0.0	1.9
Prop In Lane	1.00		0.14	1.00		0.01	1.00		0.77	1.00		0.84
Lane Grp Cap(c), veh/h	672	1174	1206	55	533	561	130	0	120	58	0	53
V/C Ratio(X)	0.02	0.47	0.48	0.67	0.97	0.97	0.69	0.00	0.40	0.09	0.00	0.61
Avail Cap(c_a), veh/h	672	1174	1206	241	533	561	316	0	290	326	0	295
HCM Platoon Ratio	1.00	1.00	1.00	0.67	0.67	0.67	1.00	1.00	1.00	1.00	1.00	1.00
Upstream Filter(I)	1.00	1.00	1.00	0.92	0.92	0.92	1.00	0.00	1.00	1.00	0.00	1.00
Uniform Delay (d), s/veh	19.1	7.9	7.9	48.4	39.1	39.1	45.2	0.0	44.2	47.0	0.0	47.8
Incr Delay (d2), s/veh	0.0	1.4	1.3	12.0	29.8	28.9	8.9	0.0	3.1	0.9	0.0	15.0
Initial Q Delay(d3),s/veh	0.0	0.0	0.0	0.0	0.0	0.0	0.0	0.0	0.0	0.0	0.0	0.0
%ile BackOfQ(50%),veh/ln	0.2	5.4	5.5	1.1	17.2	18.0	2.5	0.0	1.2	0.1	0.0	1.0
Unsig. Movement Delay, s/veh												
LnGrp Delay(d),s/veh	19.1	9.3	9.3	60.4	68.8	68.0	54.1	0.0	47.2	47.9	0.0	62.8
LnGrp LOS	B	A	A	E	E	E	D	A	D	D	A	E
Approach Vol, veh/h		1141			1093			138			37	
Approach Delay, s/veh		9.4			68.1			51.7			60.8	
Approach LOS		A			E			D			E	

Timer - Assigned Phs	1	2		4	5	6		8
Phs Duration (G+Y+Rc), s	43.4	36.0		12.4	7.2	72.1		8.2
Change Period (Y+Rc), s	5.0	* 5		5.0	4.0	5.0		5.0
Max Green Setting (Gmax), s	14.0	* 31		18.0	14.0	31.0		18.0
Max Q Clear Time (g_c+I1), s	2.4	31.7		7.0	4.1	17.4		3.9
Green Ext Time (p_c), s	0.0	0.0		0.4	0.0	11.4		0.1

Intersection Summary	
HCM 6th Ctrl Delay	39.2
HCM 6th LOS	D

Notes

User approved pedestrian interval to be less than phase max green.

* HCM 6th computational engine requires equal clearance times for the phases crossing the barrier.

Movement	EBL	EBT	EBR	WBL	WBT	WBR	NBL	NBT	NBR	SBL	SBT	SBR
Lane Configurations												
Traffic Volume (veh/h)	25	960	42	26	940	45	53	5	26	60	5	30
Future Volume (veh/h)	25	960	42	26	940	45	53	5	26	60	5	30
Initial Q (Qb), veh	0	0	0	0	0	0	0	0	0	0	0	0
Ped-Bike Adj(A_pbT)	1.00		1.00	1.00		1.00	1.00		1.00	1.00		1.00
Parking Bus, Adj	1.00	1.00	1.00	1.00	1.00	1.00	1.00	1.00	1.00	1.00	1.00	1.00
Work Zone On Approach		No			No			No			No	
Adj Sat Flow, veh/h/ln	1856	1856	1856	1870	1870	1870	1470	1470	1470	1826	1826	1826
Adj Flow Rate, veh/h	26	1000	44	27	979	47	55	5	27	62	5	31
Peak Hour Factor	0.96	0.96	0.96	0.96	0.96	0.96	0.96	0.96	0.96	0.96	0.96	0.96
Percent Heavy Veh, %	3	3	3	2	2	2	29	29	29	5	5	5
Cap, veh/h	45	2415	106	47	2426	116	119	17	34	222	15	243
Arrive On Green	0.05	1.00	1.00	0.03	0.70	0.70	0.13	0.13	0.13	0.13	0.13	0.13
Sat Flow, veh/h	1767	3440	151	1781	3452	166	455	126	262	1158	116	1544
Grp Volume(v), veh/h	26	512	532	27	504	522	87	0	0	67	0	31
Grp Sat Flow(s),veh/h/ln	1767	1763	1828	1781	1777	1840	843	0	0	1274	0	1544
Q Serve(g_s), s	1.4	0.0	0.0	1.5	11.8	11.8	6.0	0.0	0.0	0.0	0.0	1.7
Cycle Q Clear(g_c), s	1.4	0.0	0.0	1.5	11.8	11.8	10.9	0.0	0.0	4.9	0.0	1.7
Prop In Lane	1.00		0.08	1.00		0.09	0.63		0.31	0.93		1.00
Lane Grp Cap(c), veh/h	45	1238	1284	47	1249	1293	170	0	0	237	0	243
V/C Ratio(X)	0.57	0.41	0.41	0.57	0.40	0.40	0.51	0.00	0.00	0.28	0.00	0.13
Avail Cap(c_a), veh/h	194	1238	1284	338	1249	1293	259	0	0	344	0	364
HCM Platoon Ratio	2.00	2.00	2.00	1.00	1.00	1.00	1.00	1.00	1.00	1.00	1.00	1.00
Upstream Filter(I)	0.85	0.85	0.85	1.00	1.00	1.00	1.00	0.00	0.00	1.00	0.00	1.00
Uniform Delay (d), s/veh	46.9	0.0	0.0	48.1	6.2	6.2	43.5	0.0	0.0	39.8	0.0	36.2
Incr Delay (d2), s/veh	9.3	0.9	0.8	10.6	1.0	0.9	2.4	0.0	0.0	0.6	0.0	0.2
Initial Q Delay(d3),s/veh	0.0	0.0	0.0	0.0	0.0	0.0	0.0	0.0	0.0	0.0	0.0	0.0
%ile BackOfQ(50%),veh/ln	0.7	0.3	0.3	0.8	4.0	4.1	2.2	0.0	0.0	1.6	0.0	0.7
Unsig. Movement Delay, s/veh												
LnGrp Delay(d),s/veh	56.2	0.9	0.8	58.7	7.1	7.1	45.8	0.0	0.0	40.4	0.0	36.5
LnGrp LOS	E	A	A	E	A	A	D	A	A	D	A	D
Approach Vol, veh/h		1070			1053			87			98	
Approach Delay, s/veh		2.2			8.4			45.8			39.2	
Approach LOS		A			A			D			D	

Timer - Assigned Phs	1	2		4	5	6		8
Phs Duration (G+Y+Rc), s	6.6	75.3		18.2	6.6	75.2		18.2
Change Period (Y+Rc), s	4.0	5.0		5.0	4.0	5.0		5.0
Max Green Setting (Gmax), s	11.0	54.0		21.0	19.0	46.0		21.0
Max Q Clear Time (g_c+I1), s	3.4	13.8		6.9	3.5	2.0		12.9
Green Ext Time (p_c), s	0.0	27.7		0.2	0.0	33.2		0.1

Intersection Summary	
HCM 6th Ctrl Delay	8.3
HCM 6th LOS	A

Notes

User approved pedestrian interval to be less than phase max green.

Movement	EBL	EBT	EBR	WBL	WBT	WBR	NBL	NBT	NBR	SBL	SBT	SBR
Lane Configurations												
Traffic Volume (veh/h)	15	995	10	10	939	10	10	0	10	15	0	10
Future Volume (veh/h)	15	995	10	10	939	10	10	0	10	15	0	10
Initial Q (Qb), veh	0	0	0	0	0	0	0	0	0	0	0	0
Ped-Bike Adj(A_pbT)	1.00		1.00	1.00		1.00	1.00		1.00	1.00		1.00
Parking Bus, Adj	1.00	1.00	1.00	1.00	1.00	1.00	1.00	1.00	1.00	1.00	1.00	1.00
Work Zone On Approach		No			No			No			No	
Adj Sat Flow, veh/h/ln	1781	1781	1781	1796	1796	1796	1781	1781	1781	1826	1826	1826
Adj Flow Rate, veh/h	16	1082	11	11	1021	11	11	0	11	16	0	11
Peak Hour Factor	0.92	0.92	0.92	0.92	0.92	0.92	0.92	0.92	0.92	0.92	0.92	0.92
Percent Heavy Veh, %	8	8	8	7	7	7	8	8	8	5	5	5
Cap, veh/h	34	1971	879	24	1968	878	146	0	64	146	0	65
Arrive On Green	0.02	0.58	0.58	0.01	0.58	0.58	0.04	0.00	0.04	0.04	0.00	0.04
Sat Flow, veh/h	1697	3385	1510	1711	3413	1522	0	0	1510	0	0	1547
Grp Volume(v), veh/h	16	1082	11	11	1021	11	11	0	11	16	0	11
Grp Sat Flow(s),veh/h/ln	1697	1692	1510	1711	1706	1522	0	0	1510	0	0	1547
Q Serve(g_s), s	0.5	9.7	0.2	0.3	8.9	0.2	0.0	0.0	0.3	0.0	0.0	0.3
Cycle Q Clear(g_c), s	0.5	9.7	0.2	0.3	8.9	0.2	2.1	0.0	0.3	2.1	0.0	0.3
Prop In Lane	1.00		1.00	1.00		1.00	1.00		1.00	1.00		1.00
Lane Grp Cap(c), veh/h	34	1971	879	24	1968	878	146	0	64	146	0	65
V/C Ratio(X)	0.47	0.55	0.01	0.45	0.52	0.01	0.08	0.00	0.17	0.11	0.00	0.17
Avail Cap(c_a), veh/h	172	2967	1323	174	2992	1334	931	0	950	589	0	565
HCM Platoon Ratio	1.00	1.00	1.00	1.00	1.00	1.00	1.00	1.00	1.00	1.00	1.00	1.00
Upstream Filter(I)	1.00	1.00	1.00	1.00	1.00	1.00	1.00	0.00	1.00	1.00	0.00	1.00
Uniform Delay (d), s/veh	23.9	6.3	4.3	24.1	6.3	4.4	24.6	0.0	22.8	24.6	0.0	22.8
Incr Delay (d2), s/veh	9.9	0.5	0.0	12.6	0.5	0.0	0.2	0.0	1.3	0.7	0.0	2.6
Initial Q Delay(d3),s/veh	0.0	0.0	0.0	0.0	0.0	0.0	0.0	0.0	0.0	0.0	0.0	0.0
%ile BackOfQ(50%),veh/ln	0.3	2.4	0.0	0.2	2.2	0.0	0.1	0.0	0.1	0.2	0.0	0.2
Unsig. Movement Delay, s/veh												
LnGrp Delay(d),s/veh	33.8	6.8	4.3	36.7	6.8	4.5	24.9	0.0	24.0	25.3	0.0	25.3
LnGrp LOS	C	A	A	D	A	A	C	A	C	C	A	C
Approach Vol, veh/h		1109			1043			22			27	
Approach Delay, s/veh		7.2			7.0			24.4			25.3	
Approach LOS		A			A			C			C	

Timer - Assigned Phs	1	2		4	5	6		8
Phs Duration (G+Y+Rc), s	7.4	34.8		7.1	7.1	35.1		7.1
Change Period (Y+Rc), s	6.4	6.4		5.0	6.4	6.4		5.0
Max Green Setting (Gmax), s	5.0	43.2		18.0	5.0	43.2		31.0
Max Q Clear Time (g_c+I1), s	2.5	10.9		4.1	2.3	11.7		4.1
Green Ext Time (p_c), s	0.0	16.2		0.1	0.0	17.0		0.0

Intersection Summary	
HCM 6th Ctrl Delay	7.5
HCM 6th LOS	A

Intersection	
Int Delay, s/veh	1.9

Movement	EBL	EBT	WBT	WBR	SBL	SBR
Lane Configurations						
Traffic Vol, veh/h	21	125	210	5	12	47
Future Vol, veh/h	21	125	210	5	12	47
Conflicting Peds, #/hr	0	0	0	0	0	0
Sign Control	Free	Free	Free	Free	Stop	Stop
RT Channelized	-	None	-	None	-	None
Storage Length	450	-	-	-	0	-
Veh in Median Storage, #	-	0	0	-	0	-
Grade, %	-	0	0	-	0	-
Peak Hour Factor	82	82	82	82	82	82
Heavy Vehicles, %	8	8	2	2	15	15
Mvmt Flow	26	152	256	6	15	57

Major/Minor	Major1		Major2		Minor2	
Conflicting Flow All	262	0	-	0	463	259
Stage 1	-	-	-	-	259	-
Stage 2	-	-	-	-	204	-
Critical Hdwy	4.18	-	-	-	6.55	6.35
Critical Hdwy Stg 1	-	-	-	-	5.55	-
Critical Hdwy Stg 2	-	-	-	-	5.55	-
Follow-up Hdwy	2.272	-	-	-	3.635	3.435
Pot Cap-1 Maneuver	1268	-	-	-	534	749
Stage 1	-	-	-	-	755	-
Stage 2	-	-	-	-	800	-
Platoon blocked, %		-	-	-		
Mov Cap-1 Maneuver	1268	-	-	-	523	749
Mov Cap-2 Maneuver	-	-	-	-	523	-
Stage 1	-	-	-	-	739	-
Stage 2	-	-	-	-	800	-

Approach	EB	WB	SB
HCM Control Delay, s	1.1	0	10.8
HCM LOS			B

Minor Lane/Major Mvmt	EBL	EBT	WBT	WBR	SBLn1
Capacity (veh/h)	1268	-	-	-	688
HCM Lane V/C Ratio	0.02	-	-	-	0.105
HCM Control Delay (s)	7.9	-	-	-	10.8
HCM Lane LOS	A	-	-	-	B
HCM 95th %tile Q(veh)	0.1	-	-	-	0.3

Intersection	
Int Delay, s/veh	3

Movement	EBL	EBT	EBR	WBL	WBT	WBR	NBL	NBT	NBR	SBL	SBT	SBR
Lane Configurations												
Traffic Vol, veh/h	5	131	95	95	167	5	30	0	10	5	5	10
Future Vol, veh/h	5	131	95	95	167	5	30	0	10	5	5	10
Conflicting Peds, #/hr	0	0	0	0	0	0	0	0	0	0	0	0
Sign Control	Free	Free	Free	Free	Free	Free	Stop	Stop	Stop	Stop	Stop	Stop
RT Channelized	-	-	None	-	-	None	-	-	None	-	-	None
Storage Length	-	-	-	-	-	-	-	-	-	-	-	-
Veh in Median Storage, #	-	0	-	-	0	-	-	0	-	-	0	-
Grade, %	-	0	-	-	0	-	-	0	-	-	0	-
Peak Hour Factor	89	89	89	89	89	89	89	89	89	89	89	89
Heavy Vehicles, %	9	9	9	7	7	7	0	0	0	53	53	53
Mvmt Flow	6	147	107	107	188	6	34	0	11	6	6	11

Major/Minor	Major1			Major2			Minor1			Minor2		
Conflicting Flow All	194	0	0	254	0	0	627	621	127	491	671	191
Stage 1	-	-	-	-	-	-	213	213	-	405	405	-
Stage 2	-	-	-	-	-	-	414	408	-	86	266	-
Critical Hdwy	4.235	-	-	4.205	-	-	7.3	6.5	6.9	8.095	7.295	6.995
Critical Hdwy Stg 1	-	-	-	-	-	-	6.5	5.5	-	6.895	6.295	-
Critical Hdwy Stg 2	-	-	-	-	-	-	6.1	5.5	-	7.295	6.295	-
Follow-up Hdwy	2.2855	-	-	2.2665	-	-	3.5	4	3.3	4.0035	4.5035	3.8035
Pot Cap-1 Maneuver	1333	-	-	1277	-	-	385	406	906	387	303	721
Stage 1	-	-	-	-	-	-	775	730	-	514	502	-
Stage 2	-	-	-	-	-	-	620	600	-	792	590	-
Platoon blocked, %		-	-		-	-						
Mov Cap-1 Maneuver	1333	-	-	1277	-	-	345	366	906	353	273	721
Mov Cap-2 Maneuver	-	-	-	-	-	-	345	366	-	353	273	-
Stage 1	-	-	-	-	-	-	771	726	-	511	455	-
Stage 2	-	-	-	-	-	-	546	544	-	778	587	-

Approach	EB	WB	NB	SB
HCM Control Delay, s	0.2	2.9	14.9	13.8
HCM LOS			B	B

Minor Lane/Major Mvmt	NBLn1	EBL	EBT	EBR	WBL	WBT	WBR	SBLn1
Capacity (veh/h)	408	1333	-	-	1277	-	-	432
HCM Lane V/C Ratio	0.11	0.004	-	-	0.084	-	-	0.052
HCM Control Delay (s)	14.9	7.7	0	-	8.1	0	-	13.8
HCM Lane LOS	B	A	A	-	A	A	-	B
HCM 95th %tile Q(veh)	0.4	0	-	-	0.3	-	-	0.2

Movement	WBL	WBR	NBT	NBR	SBL	SBT
Lane Configurations						
Traffic Volume (veh/h)	85	112	451	63	183	1257
Future Volume (veh/h)	85	112	451	63	183	1257
Initial Q (Qb), veh	0	0	0	0	0	0
Ped-Bike Adj(A_pbT)	1.00	1.00		1.00	1.00	
Parking Bus, Adj	1.00	1.00	1.00	1.00	1.00	1.00
Work Zone On Approach	No		No			No
Adj Sat Flow, veh/h/ln	1781	1781	1826	1826	1885	1885
Adj Flow Rate, veh/h	91	120	485	68	197	1352
Peak Hour Factor	0.93	0.93	0.93	0.93	0.93	0.93
Percent Heavy Veh, %	8	8	5	5	1	1
Cap, veh/h	101	133	1024	144	573	1403
Arrive On Green	0.15	0.15	0.65	0.65	0.05	0.74
Sat Flow, veh/h	681	898	1567	220	1795	1885
Grp Volume(v), veh/h	212	0	0	553	197	1352
Grp Sat Flow(s),veh/h/ln	1586	0	0	1786	1795	1885
Q Serve(g_s), s	17.6	0.0	0.0	20.8	4.7	86.9
Cycle Q Clear(g_c), s	17.6	0.0	0.0	20.8	4.7	86.9
Prop In Lane	0.43	0.57		0.12	1.00	
Lane Grp Cap(c), veh/h	235	0	0	1168	573	1403
V/C Ratio(X)	0.90	0.00	0.00	0.47	0.34	0.96
Avail Cap(c_a), veh/h	284	0	0	1202	576	1429
HCM Platoon Ratio	1.00	1.00	1.00	1.00	1.00	1.00
Upstream Filter(I)	1.00	0.00	0.00	1.00	1.00	1.00
Uniform Delay (d), s/veh	56.1	0.0	0.0	11.6	8.5	15.5
Incr Delay (d2), s/veh	26.6	0.0	0.0	0.4	0.5	15.9
Initial Q Delay(d3),s/veh	0.0	0.0	0.0	0.0	0.0	0.0
%ile BackOfQ(50%),veh/ln	8.8	0.0	0.0	8.2	1.7	37.9
Unsig. Movement Delay, s/veh						
LnGrp Delay(d),s/veh	82.7	0.0	0.0	12.1	9.0	31.4
LnGrp LOS	F	A	A	B	A	C
Approach Vol, veh/h	212		553			1549
Approach Delay, s/veh	82.7		12.1			28.5
Approach LOS	F		B			C

Timer - Assigned Phs	1	2			6	8
Phs Duration (G+Y+Rc), s	12.2	95.7			107.9	26.2
Change Period (Y+Rc), s	5.5	* 8.1			* 8.1	6.3
Max Green Setting (Gmax), s	6.9	* 90			* 1E2	24.0
Max Q Clear Time (g_c+I1), s	6.7	22.8			88.9	19.6
Green Ext Time (p_c), s	0.0	6.6			10.9	0.3

Intersection Summary	
HCM 6th Ctrl Delay	29.6
HCM 6th LOS	C

Notes

User approved pedestrian interval to be less than phase max green.

User approved volume balancing among the lanes for turning movement.

* HCM 6th computational engine requires equal clearance times for the phases crossing the barrier.

Movement	EBL	EBR	NBL	NBT	SBT	SBR
Lane Configurations						
Traffic Volume (vph)	70	275	90	337	1285	100
Future Volume (vph)	70	275	90	337	1285	100
Ideal Flow (vphpl)	1900	1900	1900	1900	1900	1900
Total Lost time (s)	5.0	5.0	6.5	6.5	6.5	6.5
Lane Util. Factor	1.00	1.00	1.00	1.00	1.00	1.00
Frt	1.00	0.85	1.00	1.00	1.00	0.85
Flt Protected	0.95	1.00	0.95	1.00	1.00	1.00
Satd. Flow (prot)	1752	1568	1787	1881	1881	1599
Flt Permitted	0.95	1.00	0.02	1.00	1.00	1.00
Satd. Flow (perm)	1752	1568	42	1881	1881	1599
Peak-hour factor, PHF	0.94	0.94	0.94	0.94	0.94	0.94
Adj. Flow (vph)	74	293	96	359	1367	106
RTOR Reduction (vph)	0	91	0	0	0	6
Lane Group Flow (vph)	74	202	96	359	1367	100
Heavy Vehicles (%)	3%	3%	1%	1%	1%	1%
Turn Type	custom	custom	pm+pt	NA	NA	Perm
Protected Phases	3	3	5	2	6	
Permitted Phases	4	4	2			6
Actuated Green, G (s)	34.9	34.9	193.6	193.6	171.4	171.4
Effective Green, g (s)	34.9	34.9	193.6	193.6	171.4	171.4
Actuated g/C Ratio	0.15	0.15	0.81	0.81	0.71	0.71
Clearance Time (s)	5.0	5.0	6.5	6.5	6.5	6.5
Vehicle Extension (s)	2.0	2.0	2.0	5.0	5.0	5.0
Lane Grp Cap (vph)	254	228	148	1517	1343	1141
v/s Ratio Prot	0.04	c0.13	c0.04	0.19	c0.73	
v/s Ratio Perm			0.48			0.06
v/c Ratio	0.29	0.88	0.65	0.24	1.02	0.09
Uniform Delay, d1	91.5	100.6	91.5	5.5	34.3	10.5
Progression Factor	1.00	1.00	0.96	1.59	1.00	1.00
Incremental Delay, d2	0.2	30.0	6.9	0.4	29.1	0.2
Delay (s)	91.7	130.5	95.0	9.2	63.4	10.6
Level of Service	F	F	F	A	E	B
Approach Delay (s)	122.7			27.3	59.6	
Approach LOS	F			C	E	

Intersection Summary			
HCM 2000 Control Delay	63.3	HCM 2000 Level of Service	E
HCM 2000 Volume to Capacity ratio	0.98		
Actuated Cycle Length (s)	240.0	Sum of lost time (s)	21.0
Intersection Capacity Utilization	94.2%	ICU Level of Service	F
Analysis Period (min)	15		
c Critical Lane Group			

Movement	EBL	EBR	NBL	NBT	SBT	SBR
Lane Configurations						
Traffic Volume (vph)	122	20	10	305	1315	265
Future Volume (vph)	122	20	10	305	1315	265
Ideal Flow (vphpl)	1900	1900	1900	1900	1900	1900
Total Lost time (s)	5.0	5.0	6.0	6.0	6.0	5.0
Lane Util. Factor	1.00	1.00	1.00	1.00	1.00	1.00
Frt	1.00	0.85	1.00	1.00	1.00	0.85
Flt Protected	0.95	1.00	0.95	1.00	1.00	1.00
Satd. Flow (prot)	1787	1599	1787	1881	1881	1599
Flt Permitted	0.95	1.00	0.04	1.00	1.00	1.00
Satd. Flow (perm)	1787	1599	80	1881	1881	1599
Peak-hour factor, PHF	0.91	0.91	0.91	0.91	0.91	0.91
Adj. Flow (vph)	134	22	11	335	1445	291
RTOR Reduction (vph)	0	20	0	0	0	23
Lane Group Flow (vph)	134	2	11	335	1445	269
Heavy Vehicles (%)	1%	1%	1%	1%	1%	1%
Turn Type	custom	custom	pm+pt	NA	NA	pm+ov
Protected Phases	3	3	5	2	6	3
Permitted Phases	4	4	2			6
Actuated Green, G (s)	13.4	13.4	95.6	95.6	88.6	102.0
Effective Green, g (s)	13.4	13.4	95.6	95.6	88.6	102.0
Actuated g/C Ratio	0.11	0.11	0.80	0.80	0.74	0.85
Clearance Time (s)	5.0	5.0	6.0	6.0	6.0	5.0
Vehicle Extension (s)	2.0	2.0	2.0	2.0	2.0	2.0
Lane Grp Cap (vph)	199	178	77	1498	1388	1359
v/s Ratio Prot	c0.07	0.00	0.00	c0.18	c0.77	0.02
v/s Ratio Perm			0.11			0.15
v/c Ratio	0.67	0.01	0.14	0.22	1.04	0.20
Uniform Delay, d1	51.2	47.4	36.9	3.0	15.7	1.6
Progression Factor	1.00	1.00	1.00	1.00	1.52	1.11
Incremental Delay, d2	6.9	0.0	0.3	0.3	26.7	0.0
Delay (s)	58.1	47.4	37.2	3.4	50.6	1.8
Level of Service	E	D	D	A	D	A
Approach Delay (s)	56.6			4.4	42.4	
Approach LOS	E			A	D	

Intersection Summary			
HCM 2000 Control Delay	37.5	HCM 2000 Level of Service	D
HCM 2000 Volume to Capacity ratio	1.02		
Actuated Cycle Length (s)	120.0	Sum of lost time (s)	20.0
Intersection Capacity Utilization	85.1%	ICU Level of Service	E
Analysis Period (min)	15		
c Critical Lane Group			

Intersection	
Int Delay, s/veh	20.8

Movement	EBL	EBT	EBR	WBL	WBT	WBR	NBL	NBT	NBR	SBL	SBT	SBR
Lane Configurations												
Traffic Vol, veh/h	0	0	0	210	0	20	20	285	0	0	550	730
Future Vol, veh/h	0	0	0	210	0	20	20	285	0	0	550	730
Conflicting Peds, #/hr	0	0	0	0	0	0	0	0	0	0	0	0
Sign Control	Stop	Stop	Stop	Stop	Stop	Stop	Free	Free	Free	Free	Free	Free
RT Channelized	-	-	None	-	-	None	-	-	None	-	-	None
Storage Length	-	-	-	-	-	500	175	-	-	-	-	375
Veh in Median Storage, #	-	1	-	-	0	-	-	0	-	-	0	-
Grade, %	-	0	-	-	0	-	-	0	-	-	0	-
Peak Hour Factor	98	98	98	98	98	98	98	98	98	98	98	98
Heavy Vehicles, %	0	0	0	1	1	1	1	1	1	1	1	1
Mvmt Flow	0	0	0	214	0	20	20	291	0	0	561	745

Major/Minor	Minor1		Major1			Major2			
Conflicting Flow All	1265	1637	291	1306	0	-	-	-	0
Stage 1	331	331	-	-	-	-	-	-	-
Stage 2	934	1306	-	-	-	-	-	-	-
Critical Hdwy	6.41	6.51	6.21	4.11	-	-	-	-	-
Critical Hdwy Stg 1	5.41	5.51	-	-	-	-	-	-	-
Critical Hdwy Stg 2	5.41	5.51	-	-	-	-	-	-	-
Follow-up Hdwy	3.509	4.009	3.309	2.209	-	-	-	-	-
Pot Cap-1 Maneuver	~ 188	101	751	533	-	0	0	-	-
Stage 1	730	647	-	-	-	0	0	-	-
Stage 2	384	231	-	-	-	0	0	-	-
Platoon blocked, %					-			-	-
Mov Cap-1 Maneuver	~ 181	0	751	533	-	-	-	-	-
Mov Cap-2 Maneuver	~ 181	0	-	-	-	-	-	-	-
Stage 1	702	0	-	-	-	-	-	-	-
Stage 2	384	0	-	-	-	-	-	-	-

Approach	WB	NB	SB
HCM Control Delay, s	162.7	0.8	0
HCM LOS	F		

Minor Lane/Major Mvmt	NBL	NBT	WBLn1	WBLn2	SBT	SBR
Capacity (veh/h)	533	-	181	751	-	-
HCM Lane V/C Ratio	0.038	-	1.184	0.027	-	-
HCM Control Delay (s)	12	-	177.2	9.9	-	-
HCM Lane LOS	B	-	F	A	-	-
HCM 95th %tile Q(veh)	0.1	-	11.3	0.1	-	-

Notes

~: Volume exceeds capacity $: Delay exceeds 300s +: Computation Not Defined *: All major volume in platoon

Movement	EBL	EBR	NBL	NBT	SBT	SBR
Lane Configurations						
Traffic Volume (veh/h)	165	30	35	140	730	30
Future Volume (veh/h)	165	30	35	140	730	30
Initial Q (Qb), veh	0	0	0	0	0	0
Ped-Bike Adj(A_pbT)	1.00	1.00	1.00			1.00
Parking Bus, Adj	1.00	1.00	1.00	1.00	1.00	1.00
Work Zone On Approach	No			No	No	
Adj Sat Flow, veh/h/ln	1885	1885	1885	1885	1900	1900
Adj Flow Rate, veh/h	172	31	36	146	760	31
Peak Hour Factor	0.96	0.96	0.96	0.96	0.96	0.96
Percent Heavy Veh, %	1	1	1	1	0	0
Cap, veh/h	248	221	175	650	1078	44
Arrive On Green	0.14	0.14	0.59	0.59	0.59	0.59
Sat Flow, veh/h	1795	1598	141	1093	1813	74
Grp Volume(v), veh/h	172	31	182	0	0	791
Grp Sat Flow(s),veh/h/ln	1795	1598	1234	0	0	1887
Q Serve(g_s), s	4.3	0.8	0.9	0.0	0.0	13.8
Cycle Q Clear(g_c), s	4.3	0.8	14.7	0.0	0.0	13.8
Prop In Lane	1.00	1.00	0.20			0.04
Lane Grp Cap(c), veh/h	248	221	826	0	0	1122
V/C Ratio(X)	0.69	0.14	0.22	0.00	0.00	0.70
Avail Cap(c_a), veh/h	1283	1142	826	0	0	1748
HCM Platoon Ratio	1.00	1.00	1.00	1.00	1.00	1.00
Upstream Filter(I)	1.00	1.00	1.00	0.00	0.00	1.00
Uniform Delay (d), s/veh	19.4	17.9	4.7	0.0	0.0	6.7
Incr Delay (d2), s/veh	3.5	0.3	0.3	0.0	0.0	1.7
Initial Q Delay(d3),s/veh	0.0	0.0	0.0	0.0	0.0	0.0
%ile BackOfQ(50%),veh/ln	1.8	0.3	0.6	0.0	0.0	3.9
Unsig. Movement Delay, s/veh						
LnGrp Delay(d),s/veh	22.9	18.2	5.0	0.0	0.0	8.4
LnGrp LOS	C	B	A	A	A	A
Approach Vol, veh/h	203			182	791	
Approach Delay, s/veh	22.1			5.0	8.4	
Approach LOS	C			A	A	

Timer - Assigned Phs		2		4		6
Phs Duration (G+Y+Rc), s		34.4		12.8		34.4
Change Period (Y+Rc), s		6.3		6.3		6.3
Max Green Setting (Gmax), s		23.7		33.7		43.7
Max Q Clear Time (g_c+I1), s		16.7		6.3		15.8
Green Ext Time (p_c), s		0.9		0.6		12.3

Intersection Summary	
HCM 6th Ctrl Delay	10.3
HCM 6th LOS	B

Movement	EBL	EBT	EBR	WBL	WBT	WBR	NBL	NBT	NBR	SBL	SBT	SBR
Lane Configurations												
Traffic Volume (veh/h)	95	5	15	10	5	5	45	533	5	5	1380	385
Future Volume (veh/h)	95	5	15	10	5	5	45	533	5	5	1380	385
Initial Q (Qb), veh	0	0	0	0	0	0	0	0	0	0	0	0
Ped-Bike Adj(A_pbT)	1.00		1.00	1.00		1.00	1.00		1.00	1.00		1.00
Parking Bus, Adj	1.00	1.00	1.00	1.00	1.00	1.00	1.00	1.00	1.00	1.00	1.00	1.00
Work Zone On Approach		No			No			No			No	
Adj Sat Flow, veh/h/ln	1885	1885	1885	1900	1900	1900	1826	1826	1826	1856	1856	1856
Adj Flow Rate, veh/h	101	5	16	11	5	5	48	567	5	5	1468	410
Peak Hour Factor	0.94	0.94	0.94	0.94	0.94	0.94	0.94	0.94	0.94	0.94	0.94	0.94
Percent Heavy Veh, %	1	1	1	0	0	0	5	5	5	3	3	3
Cap, veh/h	151	5	17	222	116	116	82	1316	12	560	1324	1122
Arrive On Green	0.09	0.09	0.09	0.01	0.13	0.13	0.02	0.73	0.73	0.00	0.71	0.71
Sat Flow, veh/h	1202	60	190	1810	872	872	1739	1807	16	1767	1856	1572
Grp Volume(v), veh/h	122	0	0	11	0	10	48	0	572	5	1468	410
Grp Sat Flow(s),veh/h/ln	1452	0	0	1810	0	1743	1739	0	1823	1767	1856	1572
Q Serve(g_s), s	12.1	0.0	0.0	0.8	0.0	0.7	1.1	0.0	17.9	0.1	102.9	14.6
Cycle Q Clear(g_c), s	12.1	0.0	0.0	0.8	0.0	0.7	1.1	0.0	17.9	0.1	102.9	14.6
Prop In Lane	0.83		0.13	1.00		0.50	1.00		0.01	1.00		1.00
Lane Grp Cap(c), veh/h	173	0	0	222	0	232	82	0	1327	560	1324	1122
V/C Ratio(X)	0.71	0.00	0.00	0.05	0.00	0.04	0.59	0.00	0.43	0.01	1.11	0.37
Avail Cap(c_a), veh/h	173	0	0	278	0	297	98	0	1327	602	1324	1122
HCM Platoon Ratio	1.00	1.00	1.00	1.00	1.00	1.00	1.00	1.00	1.00	1.00	1.00	1.00
Upstream Filter(I)	1.00	0.00	0.00	1.00	0.00	1.00	1.00	0.00	1.00	1.00	1.00	1.00
Uniform Delay (d), s/veh	65.6	0.0	0.0	57.6	0.0	54.5	42.0	0.0	7.8	6.7	20.7	8.0
Incr Delay (d2), s/veh	13.6	0.0	0.0	0.1	0.0	0.1	6.5	0.0	0.5	0.0	60.2	0.4
Initial Q Delay(d3),s/veh	0.0	0.0	0.0	0.0	0.0	0.0	0.0	0.0	0.0	0.0	0.0	0.0
%ile BackOfQ(50%),veh/ln	5.1	0.0	0.0	0.4	0.0	0.3	1.4	0.0	6.9	0.0	61.9	4.9
Unsig. Movement Delay, s/veh												
LnGrp Delay(d),s/veh	79.2	0.0	0.0	57.7	0.0	54.6	48.5	0.0	8.2	6.7	80.9	8.4
LnGrp LOS	E	A	A	E	A	D	D	A	A	A	F	A
Approach Vol, veh/h		122			21			620			1883	
Approach Delay, s/veh		79.2			56.3			11.4			64.9	
Approach LOS		E			E			B			E	

Timer - Assigned Phs	1	2	3	4	5	6		8
Phs Duration (G+Y+Rc), s	6.0	112.1	6.6	19.5	8.1	110.0		26.1
Change Period (Y+Rc), s	5.5	7.1	5.5	6.9	5.5	7.1		* 6.9
Max Green Setting (Gmax), s	4.0	102.9	5.5	12.6	4.0	102.9		* 25
Max Q Clear Time (g_c+I1), s	2.1	19.9	2.8	14.1	3.1	104.9		2.7
Green Ext Time (p_c), s	0.0	9.8	0.0	0.0	0.0	0.0		0.0

Intersection Summary	
HCM 6th Ctrl Delay	53.0
HCM 6th LOS	D

Notes

User approved pedestrian interval to be less than phase max green.

* HCM 6th computational engine requires equal clearance times for the phases crossing the barrier.

Movement	EBL	EBT	EBR	WBL	WBT	WBR	NBL	NBT	NBR	SBL	SBT	SBR
Lane Configurations												
Traffic Volume (veh/h)	470	1183	110	5	435	148	85	70	30	552	85	685
Future Volume (veh/h)	470	1183	110	5	435	148	85	70	30	552	85	685
Initial Q (Qb), veh	0	0	0	0	0	0	0	0	0	0	0	0
Ped-Bike Adj(A_pbT)	1.00		1.00	1.00		1.00	1.00		0.99	1.00		0.99
Parking Bus, Adj	1.00	1.00	1.00	1.00	1.00	1.00	1.00	1.00	1.00	1.00	1.00	1.00
Work Zone On Approach		No			No			No			No	
Adj Sat Flow, veh/h/ln	1870	1870	1870	1856	1856	1856	1900	1900	1900	1870	1870	1870
Adj Flow Rate, veh/h	490	1232	115	5	453	154	89	73	31	575	89	714
Peak Hour Factor	0.96	0.96	0.96	0.96	0.96	0.96	0.96	0.96	0.96	0.96	0.96	0.96
Percent Heavy Veh, %	2	2	2	3	3	3	0	0	0	2	2	2
Cap, veh/h	469	1447	644	11	528	235	109	254	108	479	768	1064
Arrive On Green	0.26	0.41	0.41	0.01	0.15	0.15	0.06	0.20	0.20	0.27	0.41	0.41
Sat Flow, veh/h	1781	3554	1583	1767	3526	1567	1810	1259	535	1781	1870	1573
Grp Volume(v), veh/h	490	1232	115	5	453	154	89	0	104	575	89	714
Grp Sat Flow(s),veh/h/ln	1781	1777	1583	1767	1763	1567	1810	0	1794	1781	1870	1573
Q Serve(g_s), s	47.0	56.1	8.3	0.5	22.4	16.5	8.7	0.0	8.8	48.0	5.3	48.3
Cycle Q Clear(g_c), s	47.0	56.1	8.3	0.5	22.4	16.5	8.7	0.0	8.8	48.0	5.3	48.3
Prop In Lane	1.00		1.00	1.00		1.00	1.00		0.30	1.00		1.00
Lane Grp Cap(c), veh/h	469	1447	644	11	528	235	109	0	362	479	768	1064
V/C Ratio(X)	1.04	0.85	0.18	0.46	0.86	0.66	0.82	0.00	0.29	1.20	0.12	0.67
Avail Cap(c_a), veh/h	469	1447	644	50	573	255	284	0	362	479	768	1064
HCM Platoon Ratio	1.00	1.00	1.00	1.00	1.00	1.00	1.00	1.00	1.00	1.00	1.00	1.00
Upstream Filter(I)	1.00	1.00	1.00	1.00	1.00	1.00	1.00	0.00	1.00	1.00	1.00	1.00
Uniform Delay (d), s/veh	65.7	48.0	33.8	88.4	74.0	71.5	82.9	0.0	60.3	65.2	32.5	17.3
Incr Delay (d2), s/veh	53.6	5.5	0.3	27.4	13.2	8.0	13.8	0.0	2.0	108.6	0.3	3.4
Initial Q Delay(d3),s/veh	0.0	0.0	0.0	0.0	0.0	0.0	0.0	0.0	0.0	0.0	0.0	0.0
%ile BackOfQ(50%),veh/ln	28.4	26.1	3.3	0.3	11.2	7.2	4.5	0.0	4.3	36.3	2.5	18.3
Unsig. Movement Delay, s/veh												
LnGrp Delay(d),s/veh	119.3	53.6	34.1	115.8	87.2	79.5	96.7	0.0	62.3	173.9	32.8	20.7
LnGrp LOS	F	D	C	F	F	E	F	A	E	F	C	C
Approach Vol, veh/h		1837			612			193			1378	
Approach Delay, s/veh		69.9			85.5			78.2			85.4	
Approach LOS		E			F			E			F	

Timer - Assigned Phs	1	2	3	4	5	6	7	8
Phs Duration (G+Y+Rc), s	6.1	78.3	15.7	78.3	52.0	32.4	53.0	41.0
Change Period (Y+Rc), s	5.0	5.7	5.0	5.0	5.0	* 5.7	5.0	5.0
Max Green Setting (Gmax), s	5.0	70.3	28.0	56.0	47.0	* 29	48.0	36.0
Max Q Clear Time (g_c+I1), s	2.5	58.1	10.7	50.3	49.0	24.4	50.0	10.8
Green Ext Time (p_c), s	0.0	9.7	0.2	1.9	0.0	2.2	0.0	0.5

Intersection Summary	
HCM 6th Ctrl Delay	78.0
HCM 6th LOS	E

Notes

User approved pedestrian interval to be less than phase max green.

* HCM 6th computational engine requires equal clearance times for the phases crossing the barrier.

Movement	EBT	EBR	WBL	WBT	NBL	NBR
Lane Configurations						
Traffic Volume (veh/h)	1373	1200	533	667	406	400
Future Volume (veh/h)	1373	1200	533	667	406	400
Initial Q (Qb), veh	0	0	0	0	0	0
Ped-Bike Adj(A_pbT)		1.00	1.00		1.00	1.00
Parking Bus, Adj	1.00	1.00	1.00	1.00	1.00	1.00
Work Zone On Approach	No			No	No	
Adj Sat Flow, veh/h/ln	1885	1885	1870	1870	1885	1885
Adj Flow Rate, veh/h	1415	0	549	688	419	412
Peak Hour Factor	0.97	0.97	0.97	0.97	0.97	0.97
Percent Heavy Veh, %	1	1	2	2	1	1
Cap, veh/h	2251		518	2739	527	706
Arrive On Green	0.44	0.00	0.29	0.77	0.15	0.15
Sat Flow, veh/h	5316	1598	1781	3647	3483	1598
Grp Volume(v), veh/h	1415	0	549	688	419	412
Grp Sat Flow(s),veh/h/ln	1716	1598	1781	1777	1742	1598
Q Serve(g_s), s	32.0	0.0	43.6	8.3	17.4	22.7
Cycle Q Clear(g_c), s	32.0	0.0	43.6	8.3	17.4	22.7
Prop In Lane		1.00	1.00		1.00	1.00
Lane Grp Cap(c), veh/h	2251		518	2739	527	706
V/C Ratio(X)	0.63		1.06	0.25	0.79	0.58
Avail Cap(c_a), veh/h	2251		518	2739	527	706
HCM Platoon Ratio	1.00	1.00	1.00	1.00	1.00	1.00
Upstream Filter(I)	1.00	0.00	0.82	0.82	1.00	1.00
Uniform Delay (d), s/veh	32.7	0.0	53.2	4.9	61.4	31.5
Incr Delay (d2), s/veh	1.3	0.0	52.9	0.2	8.7	1.5
Initial Q Delay(d3),s/veh	0.0	0.0	0.0	0.0	0.0	0.0
%ile BackOfQ(50%),veh/ln	13.6	0.0	27.1	2.9	8.4	11.6
Unsig. Movement Delay, s/veh						
LnGrp Delay(d),s/veh	34.1	0.0	106.1	5.1	70.1	33.0
LnGrp LOS	C		F	A	E	C
Approach Vol, veh/h	1415	A		1237	831	
Approach Delay, s/veh	34.1			49.9	51.7	
Approach LOS	C			D	D	

Timer - Assigned Phs	1	2				6	8
Phs Duration (G+Y+Rc), s	50.0	72.0				122.0	28.0
Change Period (Y+Rc), s	6.4	6.4				6.4	5.3
Max Green Setting (Gmax), s	43.6	65.6				115.6	22.7
Max Q Clear Time (g_c+I1), s	45.6	34.0				10.3	24.7
Green Ext Time (p_c), s	0.0	21.5				12.1	0.0

Intersection Summary	
HCM 6th Ctrl Delay	43.9
HCM 6th LOS	D

Notes

User approved pedestrian interval to be less than phase max green.

Unsignalized Delay for [EBR] is excluded from calculations of the approach delay and intersection delay.

Movement	EBL	EBT	EBR	WBL	WBT	WBR	NBL	NBT	NBR	SBL	SBT	SBR
Lane Configurations												
Traffic Volume (vph)	60	1637	0	0	963	335	0	0	671	0	0	698
Future Volume (vph)	60	1637	0	0	963	335	0	0	671	0	0	698
Ideal Flow (vphpl)	1900	1900	1900	1900	1900	1900	1900	1900	1900	1900	1900	1900
Total Lost time (s)	5.0	5.0			5.0	5.0			4.0			5.0
Lane Util. Factor	1.00	0.95			0.95	1.00			1.00			1.00
Frt	1.00	1.00			1.00	0.85			0.86			0.86
Flt Protected	0.95	1.00			1.00	1.00			1.00			1.00
Satd. Flow (prot)	1770	3539			3539	1583			1627			1611
Flt Permitted	0.95	1.00			1.00	1.00			1.00			1.00
Satd. Flow (perm)	1770	3539			3539	1583			1627			1611
Peak-hour factor, PHF	0.97	0.97	0.97	0.97	0.97	0.97	0.97	0.97	0.97	0.97	0.97	0.97
Adj. Flow (vph)	62	1688	0	0	993	345	0	0	692	0	0	720
RTOR Reduction (vph)	0	0	0	0	0	149	0	0	0	0	0	35
Lane Group Flow (vph)	62	1688	0	0	993	196	0	0	692	0	0	685
Heavy Vehicles (%)	2%	2%	2%	2%	2%	2%	1%	1%	1%	2%	2%	2%
Turn Type	Prot	NA			NA	custom			Free			Prot
Protected Phases	3	6 8			6	1						8
Permitted Phases						6			Free			8
Actuated Green, G (s)	63.3	140.0			66.7	66.7			140.0			63.3
Effective Green, g (s)	63.3	140.0			66.7	66.7			140.0			63.3
Actuated g/C Ratio	0.45	1.00			0.48	0.48			1.00			0.45
Clearance Time (s)	5.0				5.0	5.0						5.0
Vehicle Extension (s)	2.0				2.0	2.0						2.0
Lane Grp Cap (vph)	800	3539			1686	754			1627			728
v/s Ratio Prot	0.04	0.48			c0.28	0.12						c0.43
v/s Ratio Perm									0.43			
v/c Ratio	0.08	0.48			0.59	0.26			0.43			0.94
Uniform Delay, d1	21.8	0.0			26.7	21.9			0.0			36.6
Progression Factor	0.71	1.00			1.00	1.00			1.00			1.00
Incremental Delay, d2	0.0	0.0			1.5	0.8			0.8			20.1
Delay (s)	15.4	0.0			28.2	22.7			0.8			56.7
Level of Service	B	A			C	C			A			E
Approach Delay (s)		0.6			26.8			0.8			56.7	
Approach LOS		A			C			A			E	

Intersection Summary			
HCM 2000 Control Delay	17.4	HCM 2000 Level of Service	B
HCM 2000 Volume to Capacity ratio	0.78		
Actuated Cycle Length (s)	140.0	Sum of lost time (s)	13.0
Intersection Capacity Utilization	78.2%	ICU Level of Service	D
Analysis Period (min)	15		
c Critical Lane Group			

12: SB I-405/Sunset Blvd. & Bronson Way/Maple Valley Rd.

Design Year Option 3 PM

Movement	EBL	EBT	EBR	WBL	WBT	WBR	NBL	NBT	NBR	SBL	SBT	SBR
Lane Configurations												
Traffic Volume (vph)	710	545	75	367	259	1031	0	0	0	1187	1089	562
Future Volume (vph)	710	545	75	367	259	1031	0	0	0	1187	1089	562
Ideal Flow (vphpl)	1900	1900	1900	1900	1900	1900	1900	1900	1900	1900	1900	1900
Total Lost time (s)	5.0	5.0		9.0	9.0	4.0				5.0	5.0	5.0
Lane Util. Factor	0.97	0.95		1.00	0.95	1.00				0.97	0.95	0.95
Frt	1.00	0.98		1.00	1.00	0.85				1.00	1.00	0.85
Flt Protected	0.95	1.00		0.95	1.00	1.00				0.95	1.00	1.00
Satd. Flow (prot)	3467	3509		1770	3539	1583				3433	1770	1504
Flt Permitted	0.95	1.00		0.95	1.00	1.00				0.95	1.00	1.00
Satd. Flow (perm)	3467	3509		1770	3539	1583				3433	1770	1504
Peak-hour factor, PHF	0.98	0.98	0.98	0.98	0.98	0.98	0.98	0.98	0.98	0.98	0.98	0.98
Adj. Flow (vph)	724	556	77	374	264	1052	0	0	0	1211	1111	573
RTOR Reduction (vph)	0	7	0	0	0	4	0	0	0	0	0	0
Lane Group Flow (vph)	724	626	0	374	264	1048	0	0	0	1211	1111	573
Heavy Vehicles (%)	1%	1%	1%	2%	2%	2%	0%	0%	0%	2%	2%	2%
Turn Type	Split	NA		Split	NA	custom				Split	NA	custom
Protected Phases	2	2		3	3	7				4	4	4 5
Permitted Phases						7						
Actuated Green, G (s)	25.0	25.0		24.0	24.0	106.0				72.0	72.0	102.0
Effective Green, g (s)	25.0	25.0		24.0	24.0	106.0				72.0	72.0	102.0
Actuated g/C Ratio	0.18	0.18		0.17	0.17	0.76				0.51	0.51	0.73
Clearance Time (s)	5.0	5.0		9.0	9.0	4.0				5.0	5.0	
Vehicle Extension (s)	4.0	4.0		3.0	3.0	3.0				3.0	3.0	
Lane Grp Cap (vph)	619	626		303	606	1198				1765	910	1095
v/s Ratio Prot	c0.21	0.18		c0.21	0.07	0.66				0.35	c0.63	0.38
v/s Ratio Perm												
v/c Ratio	1.17	1.00		1.23	0.44	0.87				0.69	1.22	0.52
Uniform Delay, d1	57.5	57.5		58.0	51.9	12.2				25.5	34.0	8.3
Progression Factor	1.00	1.00		0.87	0.88	1.27				1.00	1.00	1.00
Incremental Delay, d2	92.8	35.6		123.3	0.3	6.3				2.2	109.3	0.6
Delay (s)	150.3	93.1		173.6	46.2	21.9				27.7	143.3	8.9
Level of Service	F	F		F	D	C				C	F	A
Approach Delay (s)		123.6			59.2			0.0			68.4	
Approach LOS		F			E			A			E	

Intersection Summary			
HCM 2000 Control Delay	78.4	HCM 2000 Level of Service	E
HCM 2000 Volume to Capacity ratio	1.21		
Actuated Cycle Length (s)	140.0	Sum of lost time (s)	19.0
Intersection Capacity Utilization	122.3%	ICU Level of Service	H
Analysis Period (min)	15		
c Critical Lane Group			

Movement	EBL	EBT	EBR	WBL	WBT	WBR	NBL	NBT	NBR	SBL	SBT	SBR
Lane Configurations												
Traffic Volume (veh/h)	315	655	480	1036	215	194	60	565	1106	211	1322	160
Future Volume (veh/h)	315	655	480	1036	215	194	60	565	1106	211	1322	160
Initial Q (Qb), veh	0	0	0	0	0	0	0	0	0	0	0	0
Ped-Bike Adj(A_pbT)	1.00		1.00	1.00		1.00	1.00		1.00	1.00		1.00
Parking Bus, Adj	1.00	1.00	1.00	1.00	1.00	1.00	1.00	1.00	1.00	1.00	1.00	1.00
Work Zone On Approach		No			No			No			No	
Adj Sat Flow, veh/h/ln	1885	1885	1885	1870	1870	1870	1885	1885	1885	1885	1885	1885
Adj Flow Rate, veh/h	321	668	0	954	363	0	61	577	0	215	1349	0
Peak Hour Factor	0.98	0.98	0.98	0.98	0.98	0.98	0.98	0.98	0.98	0.98	0.98	0.98
Percent Heavy Veh, %	1	1	1	2	2	2	1	1	1	1	1	1
Cap, veh/h	314	660		1123	589		79	1029		257	1583	
Arrive On Green	0.17	0.17	0.00	0.10	0.10	0.00	0.04	0.20	0.00	0.14	0.31	0.00
Sat Flow, veh/h	1795	3770	1598	3563	1870	1585	1795	5147	1598	1795	5147	1598
Grp Volume(v), veh/h	321	668	0	954	363	0	61	577	0	215	1349	0
Grp Sat Flow(s),veh/h/ln	1795	1885	1598	1781	1870	1585	1795	1716	1598	1795	1716	1598
Q Serve(g_s), s	21.0	21.0	0.0	31.6	22.3	0.0	4.0	12.1	0.0	14.0	29.5	0.0
Cycle Q Clear(g_c), s	21.0	21.0	0.0	31.6	22.3	0.0	4.0	12.1	0.0	14.0	29.5	0.0
Prop In Lane	1.00		1.00	1.00		1.00	1.00		1.00	1.00		1.00
Lane Grp Cap(c), veh/h	314	660		1123	589		79	1029		257	1583	
V/C Ratio(X)	1.02	1.01		0.85	0.62		0.77	0.56		0.84	0.85	
Avail Cap(c_a), veh/h	314	660		1128	592		135	1029		269	1583	
HCM Platoon Ratio	1.00	1.00	1.00	0.33	0.33	0.33	1.00	1.00	1.00	1.00	1.00	1.00
Upstream Filter(I)	1.00	1.00	0.00	0.75	0.75	0.00	0.10	0.10	0.00	1.00	1.00	0.00
Uniform Delay (d), s/veh	49.5	49.5	0.0	51.0	46.8	0.0	56.8	43.2	0.0	50.0	39.0	0.0
Incr Delay (d2), s/veh	56.4	38.2	0.0	5.9	3.0	0.0	2.3	0.2	0.0	20.2	6.0	0.0
Initial Q Delay(d3),s/veh	0.0	0.0	0.0	0.0	0.0	0.0	0.0	0.0	0.0	0.0	0.0	0.0
%ile BackOfQ(50%),veh/ln	14.2	13.2	0.0	16.0	11.7	0.0	1.9	5.2	0.0	7.7	13.2	0.0
Unsig. Movement Delay, s/veh												
LnGrp Delay(d),s/veh	105.9	87.7	0.0	56.8	49.8	0.0	59.1	43.5	0.0	70.2	45.0	0.0
LnGrp LOS	F	F		E	D		E	D		E	D	
Approach Vol, veh/h		989	A		1317	A		638	A		1564	A
Approach Delay, s/veh		93.6			54.9			45.0			48.5	
Approach LOS		F			D			D			D	

Timer - Assigned Phs		2	3	4		6	7	8				
Phs Duration (G+Y+Rc), s		42.8	9.3	41.9		26.0	22.2	29.0				
Change Period (Y+Rc), s		5.0	4.0	5.0		5.0	5.0	* 5				
Max Green Setting (Gmax), s		38.0	9.0	33.0		21.0	18.0	* 24				
Max Q Clear Time (g_c+I1), s		33.6	6.0	31.5		23.0	16.0	14.1				
Green Ext Time (p_c), s		4.2	0.0	1.4		0.0	0.2	4.4				

Intersection Summary	
HCM 6th Ctrl Delay	59.7
HCM 6th LOS	E

Notes

User approved volume balancing among the lanes for turning movement.
* HCM 6th computational engine requires equal clearance times for the phases crossing the barrier.
User approved changes to right turn type.

Movement	EBL	EBT	EBR	WBL	WBT	WBR	NBL	NBT	NBR	SBL	SBT	SBR
Lane Configurations												
Traffic Volume (veh/h)	150	1797	30	5	1305	5	25	5	5	10	5	115
Future Volume (veh/h)	150	1797	30	5	1305	5	25	5	5	10	5	115
Initial Q (Qb), veh	0	0	0	0	0	0	0	0	0	0	0	0
Ped-Bike Adj(A_pbT)	1.00		1.00	1.00		1.00	1.00		1.00	1.00		1.00
Parking Bus, Adj	1.00	1.00	1.00	1.00	1.00	1.00	1.00	1.00	1.00	1.00	1.00	1.00
Work Zone On Approach		No			No			No			No	
Adj Sat Flow, veh/h/ln	1885	1885	1885	1870	1870	1870	1900	1900	1900	1870	1870	1870
Adj Flow Rate, veh/h	158	1892	32	5	1374	5	26	5	5	11	5	121
Peak Hour Factor	0.95	0.95	0.95	0.95	0.95	0.95	0.95	0.95	0.95	0.95	0.95	0.95
Percent Heavy Veh, %	1	1	1	2	2	2	0	0	0	2	2	2
Cap, veh/h	188	2811	47	11	2476	9	174	77	77	144	57	153
Arrive On Green	0.14	1.00	1.00	0.01	0.68	0.68	0.10	0.10	0.10	0.10	0.10	0.10
Sat Flow, veh/h	1795	3604	61	1781	3632	13	1178	792	792	963	584	1580
Grp Volume(v), veh/h	158	937	987	5	672	707	26	0	10	16	0	121
Grp Sat Flow(s),veh/h/ln	1795	1791	1874	1781	1777	1868	1178	0	1584	1547	0	1580
Q Serve(g_s), s	10.3	0.0	0.0	0.3	23.2	23.2	2.3	0.0	0.7	0.0	0.0	9.0
Cycle Q Clear(g_c), s	10.3	0.0	0.0	0.3	23.2	23.2	3.2	0.0	0.7	0.9	0.0	9.0
Prop In Lane	1.00		0.03	1.00		0.01	1.00		0.50	0.69		1.00
Lane Grp Cap(c), veh/h	188	1397	1462	11	1211	1274	174	0	154	201	0	153
V/C Ratio(X)	0.84	0.67	0.67	0.44	0.55	0.55	0.15	0.00	0.07	0.08	0.00	0.79
Avail Cap(c_a), veh/h	314	1397	1462	134	1211	1274	264	0	264	307	0	263
HCM Platoon Ratio	1.33	1.33	1.33	1.00	1.00	1.00	1.00	1.00	1.00	1.00	1.00	1.00
Upstream Filter(I)	0.09	0.09	0.09	1.00	1.00	1.00	1.00	0.00	1.00	1.00	0.00	1.00
Uniform Delay (d), s/veh	50.7	0.0	0.0	59.4	9.8	9.8	50.8	0.0	49.2	49.4	0.0	53.0
Incr Delay (d2), s/veh	1.0	0.2	0.2	24.3	1.8	1.7	0.6	0.0	0.3	0.2	0.0	12.0
Initial Q Delay(d3),s/veh	0.0	0.0	0.0	0.0	0.0	0.0	0.0	0.0	0.0	0.0	0.0	0.0
%ile BackOfQ(50%),veh/ln	4.5	0.1	0.1	0.2	8.7	9.1	0.8	0.0	0.3	0.5	0.0	4.1
Unsig. Movement Delay, s/veh												
LnGrp Delay(d),s/veh	51.7	0.2	0.2	83.7	11.6	11.5	51.4	0.0	49.5	49.6	0.0	65.0
LnGrp LOS	D	A	A	F	B	B	D	A	D	D	A	E
Approach Vol, veh/h		2082			1384			36			137	
Approach Delay, s/veh		4.1			11.8			50.8			63.2	
Approach LOS		A			B			D			E	

Timer - Assigned Phs	1	2		4	5	6		8
Phs Duration (G+Y+Rc), s	16.5	86.8		16.6	4.8	98.6		16.6
Change Period (Y+Rc), s	4.0	5.0		5.0	4.0	5.0		5.0
Max Green Setting (Gmax), s	21.0	65.0		20.0	9.0	77.0		20.0
Max Q Clear Time (g_c+I1), s	12.3	25.2		11.0	2.3	2.0		5.2
Green Ext Time (p_c), s	0.3	37.5		0.4	0.0	63.7		0.1

Intersection Summary	
HCM 6th Ctrl Delay	9.7
HCM 6th LOS	A

Movement	EBL	EBT	EBR	WBL	WBT	WBR	NBL	NBT	NBR	SBL	SBT	SBR
Lane Configurations												
Traffic Volume (veh/h)	20	1592	190	70	1175	15	105	15	55	15	20	35
Future Volume (veh/h)	20	1592	190	70	1175	15	105	15	55	15	20	35
Initial Q (Qb), veh	0	0	0	0	0	0	0	0	0	0	0	0
Ped-Bike Adj(A_pbT)	1.00		1.00	1.00		1.00	1.00		0.98	1.00		0.97
Parking Bus, Adj	1.00	1.00	1.00	1.00	1.00	1.00	1.00	1.00	1.00	1.00	1.00	1.00
Work Zone On Approach		No			No			No			No	
Adj Sat Flow, veh/h/ln	1885	1885	1885	1870	1870	1870	1900	1900	1900	1870	1870	1870
Adj Flow Rate, veh/h	21	1676	200	74	1237	16	111	16	58	16	21	37
Peak Hour Factor	0.95	0.95	0.95	0.95	0.95	0.95	0.95	0.95	0.95	0.95	0.95	0.95
Percent Heavy Veh, %	1	1	1	2	2	2	0	0	0	2	2	2
Cap, veh/h	490	2108	247	96	1527	20	157	31	111	87	29	51
Arrive On Green	0.27	0.65	0.65	0.02	0.14	0.14	0.09	0.09	0.09	0.05	0.05	0.05
Sat Flow, veh/h	1795	3229	379	1781	3592	46	1810	355	1287	1781	595	1048
Grp Volume(v), veh/h	21	916	960	74	612	641	111	0	74	16	0	58
Grp Sat Flow(s),veh/h/ln	1795	1791	1816	1781	1777	1862	1810	0	1642	1781	0	1642
Q Serve(g_s), s	1.0	43.7	46.7	5.0	40.1	40.1	7.2	0.0	5.2	1.0	0.0	4.2
Cycle Q Clear(g_c), s	1.0	43.7	46.7	5.0	40.1	40.1	7.2	0.0	5.2	1.0	0.0	4.2
Prop In Lane	1.00		0.21	1.00		0.02	1.00		0.78	1.00		0.64
Lane Grp Cap(c), veh/h	490	1169	1186	96	755	791	157	0	142	87	0	80
V/C Ratio(X)	0.04	0.78	0.81	0.77	0.81	0.81	0.71	0.00	0.52	0.18	0.00	0.73
Avail Cap(c_a), veh/h	490	1169	1186	208	755	791	271	0	246	267	0	246
HCM Platoon Ratio	1.00	1.00	1.00	0.33	0.33	0.33	1.00	1.00	1.00	1.00	1.00	1.00
Upstream Filter(I)	1.00	1.00	1.00	0.78	0.78	0.78	1.00	0.00	1.00	1.00	0.00	1.00
Uniform Delay (d), s/veh	32.1	14.8	15.3	58.2	46.9	46.9	53.3	0.0	52.4	54.8	0.0	56.3
Incr Delay (d2), s/veh	0.0	5.3	6.0	9.9	7.3	7.0	8.1	0.0	4.2	1.4	0.0	16.2
Initial Q Delay(d3),s/veh	0.0	0.0	0.0	0.0	0.0	0.0	0.0	0.0	0.0	0.0	0.0	0.0
%ile BackOfQ(50%),veh/ln	0.5	17.6	19.2	2.5	20.6	21.5	3.6	0.0	2.3	0.5	0.0	2.1
Unsig. Movement Delay, s/veh												
LnGrp Delay(d),s/veh	32.1	20.1	21.4	68.1	54.2	53.9	61.5	0.0	56.6	56.2	0.0	72.5
LnGrp LOS	C	C	C	E	D	D	E	A	E	E	A	E
Approach Vol, veh/h		1897			1327			185			74	
Approach Delay, s/veh		20.9			54.8			59.5			69.0	
Approach LOS		C			D			E			E	

Timer - Assigned Phs	1	2		4	5	6		8
Phs Duration (G+Y+Rc), s	37.8	56.0		15.4	10.4	83.3		10.8
Change Period (Y+Rc), s	5.0	* 5		5.0	4.0	5.0		5.0
Max Green Setting (Gmax), s	14.0	* 51		18.0	14.0	51.0		18.0
Max Q Clear Time (g_c+I1), s	3.0	42.1		9.2	7.0	48.7		6.2
Green Ext Time (p_c), s	0.0	8.2		0.6	0.1	2.3		0.2

Intersection Summary	
HCM 6th Ctrl Delay	36.9
HCM 6th LOS	D

Notes

User approved pedestrian interval to be less than phase max green.

* HCM 6th computational engine requires equal clearance times for the phases crossing the barrier.

Movement	EBL	EBT	EBR	WBL	WBT	WBR	NBL	NBT	NBR	SBL	SBT	SBR
Lane Configurations												
Traffic Volume (veh/h)	25	1615	37	36	1070	85	160	15	44	70	15	35
Future Volume (veh/h)	25	1615	37	36	1070	85	160	15	44	70	15	35
Initial Q (Qb), veh	0	0	0	0	0	0	0	0	0	0	0	0
Ped-Bike Adj(A_pbT)	1.00		1.00	1.00		1.00	1.00		1.00	1.00		1.00
Parking Bus, Adj	1.00	1.00	1.00	1.00	1.00	1.00	1.00	1.00	1.00	1.00	1.00	1.00
Work Zone On Approach		No			No			No			No	
Adj Sat Flow, veh/h/ln	1885	1885	1885	1870	1870	1870	1826	1826	1826	1885	1885	1885
Adj Flow Rate, veh/h	28	1794	41	40	1189	94	178	17	49	78	17	39
Peak Hour Factor	0.90	0.90	0.90	0.90	0.90	0.90	0.90	0.90	0.90	0.90	0.90	0.90
Percent Heavy Veh, %	1	1	1	2	2	2	5	5	5	1	1	1
Cap, veh/h	45	2217	51	55	2084	165	234	17	50	327	66	413
Arrive On Green	0.03	0.82	0.82	0.03	0.62	0.62	0.23	0.23	0.23	0.23	0.23	0.23
Sat Flow, veh/h	1795	3580	82	1781	3336	263	781	75	215	1168	284	1598
Grp Volume(v), veh/h	28	895	940	40	633	650	244	0	0	95	0	39
Grp Sat Flow(s),veh/h/ln	1795	1791	1870	1781	1777	1822	1072	0	0	1452	0	1598
Q Serve(g_s), s	1.8	31.5	32.1	2.7	24.9	25.0	21.0	0.0	0.0	0.0	0.0	2.2
Cycle Q Clear(g_c), s	1.8	31.5	32.1	2.7	24.9	25.0	27.4	0.0	0.0	6.3	0.0	2.2
Prop In Lane	1.00		0.04	1.00		0.14	0.73		0.20	0.82		1.00
Lane Grp Cap(c), veh/h	45	1109	1158	55	1110	1139	302	0	0	393	0	413
V/C Ratio(X)	0.62	0.81	0.81	0.73	0.57	0.57	0.81	0.00	0.00	0.24	0.00	0.09
Avail Cap(c_a), veh/h	135	1109	1158	134	1110	1139	302	0	0	393	0	413
HCM Platoon Ratio	1.33	1.33	1.33	1.00	1.00	1.00	1.00	1.00	1.00	1.00	1.00	1.00
Upstream Filter(I)	0.32	0.32	0.32	1.00	1.00	1.00	1.00	0.00	0.00	1.00	0.00	1.00
Uniform Delay (d), s/veh	57.4	6.8	6.9	57.7	13.1	13.1	48.9	0.0	0.0	37.6	0.0	33.8
Incr Delay (d2), s/veh	4.3	2.1	2.1	17.0	2.1	2.1	15.0	0.0	0.0	0.3	0.0	0.1
Initial Q Delay(d3),s/veh	0.0	0.0	0.0	0.0	0.0	0.0	0.0	0.0	0.0	0.0	0.0	0.0
%ile BackOfQ(50%),veh/ln	0.9	5.8	6.1	1.5	9.9	10.2	8.5	0.0	0.0	2.4	0.0	0.9
Unsig. Movement Delay, s/veh												
LnGrp Delay(d),s/veh	61.7	8.9	8.9	74.7	15.2	15.2	63.9	0.0	0.0	38.0	0.0	33.9
LnGrp LOS	E	A	A	E	B	B	E	A	A	D	A	C
Approach Vol, veh/h		1863			1323			244			134	
Approach Delay, s/veh		9.7			17.0			63.9			36.8	
Approach LOS		A			B			E			D	

Timer - Assigned Phs	1	2		4	5	6		8
Phs Duration (G+Y+Rc), s	7.0	80.0		33.0	7.7	79.3		33.0
Change Period (Y+Rc), s	4.0	5.0		5.0	4.0	5.0		5.0
Max Green Setting (Gmax), s	9.0	69.0		28.0	9.0	69.0		28.0
Max Q Clear Time (g_c+I1), s	3.8	27.0		8.3	4.7	34.1		29.4
Green Ext Time (p_c), s	0.0	34.6		0.3	0.0	34.4		0.0

Intersection Summary	
HCM 6th Ctrl Delay	17.2
HCM 6th LOS	B

Notes

User approved pedestrian interval to be less than phase max green.

Movement	EBL	EBT	EBR	WBL	WBT	WBR	NBL	NBT	NBR	SBL	SBT	SBR
Lane Configurations												
Traffic Volume (veh/h)	45	1713	15	10	1150	40	20	0	15	35	0	30
Future Volume (veh/h)	45	1713	15	10	1150	40	20	0	15	35	0	30
Initial Q (Qb), veh	0	0	0	0	0	0	0	0	0	0	0	0
Ped-Bike Adj(A_pbT)	1.00		1.00	1.00		1.00	1.00		1.00	1.00		1.00
Parking Bus, Adj	1.00	1.00	1.00	1.00	1.00	1.00	1.00	1.00	1.00	1.00	1.00	1.00
Work Zone On Approach		No			No			No			No	
Adj Sat Flow, veh/h/ln	1856	1856	1856	1870	1870	1870	1781	1781	1781	1900	1900	1900
Adj Flow Rate, veh/h	47	1784	16	10	1198	42	21	0	16	36	0	31
Peak Hour Factor	0.96	0.96	0.96	0.96	0.96	0.96	0.96	0.96	0.96	0.96	0.96	0.96
Percent Heavy Veh, %	3	3	3	2	2	2	8	8	8	0	0	0
Cap, veh/h	68	2432	1085	22	2358	1052	81	0	150	81	0	160
Arrive On Green	0.04	0.69	0.69	0.01	0.66	0.66	0.10	0.00	0.10	0.10	0.00	0.10
Sat Flow, veh/h	1767	3526	1572	1781	3554	1585	8	0	1510	8	0	1610
Grp Volume(v), veh/h	47	1784	16	10	1198	42	21	0	16	36	0	31
Grp Sat Flow(s),veh/h/ln	1767	1763	1572	1781	1777	1585	8	0	1510	8	0	1610
Q Serve(g_s), s	2.4	28.5	0.3	0.5	15.3	0.8	0.1	0.0	0.9	0.1	0.0	1.6
Cycle Q Clear(g_c), s	2.4	28.5	0.3	0.5	15.3	0.8	8.9	0.0	0.9	8.9	0.0	1.6
Prop In Lane	1.00		1.00	1.00		1.00	1.00		1.00	1.00		1.00
Lane Grp Cap(c), veh/h	68	2432	1085	22	2358	1052	81	0	150	81	0	160
V/C Ratio(X)	0.69	0.73	0.01	0.46	0.51	0.04	0.26	0.00	0.11	0.44	0.00	0.19
Avail Cap(c_a), veh/h	179	2681	1196	99	2540	1133	404	0	522	225	0	323
HCM Platoon Ratio	1.00	1.00	1.00	1.00	1.00	1.00	1.00	1.00	1.00	1.00	1.00	1.00
Upstream Filter(I)	1.00	1.00	1.00	1.00	1.00	1.00	1.00	0.00	1.00	1.00	0.00	1.00
Uniform Delay (d), s/veh	42.6	8.7	4.4	44.0	7.7	5.2	44.8	0.0	36.8	44.8	0.0	37.1
Incr Delay (d2), s/veh	11.9	1.3	0.0	14.2	0.4	0.0	1.7	0.0	0.3	7.9	0.0	1.2
Initial Q Delay(d3),s/veh	0.0	0.0	0.0	0.0	0.0	0.0	0.0	0.0	0.0	0.0	0.0	0.0
%ile BackOfQ(50%),veh/ln	1.2	9.2	0.1	0.3	5.1	0.2	0.5	0.0	0.3	1.0	0.0	0.7
Unsig. Movement Delay, s/veh												
LnGrp Delay(d),s/veh	54.4	10.0	4.4	58.1	8.0	5.2	46.5	0.0	37.1	52.8	0.0	38.3
LnGrp LOS	D	B	A	E	A	A	D	A	D	D	A	D
Approach Vol, veh/h		1847			1250			37			67	
Approach Delay, s/veh		11.1			8.3			42.4			46.1	
Approach LOS		B			A			D			D	

Timer - Assigned Phs	1	2		4	5	6		8
Phs Duration (G+Y+Rc), s	9.8	65.9		14.0	7.5	68.3		14.0
Change Period (Y+Rc), s	6.4	6.4		5.0	6.4	6.4		5.0
Max Green Setting (Gmax), s	9.1	64.1		18.0	5.0	68.2		31.0
Max Q Clear Time (g_c+I1), s	4.4	17.3		10.9	2.5	30.5		10.9
Green Ext Time (p_c), s	0.0	24.2		0.2	0.0	31.4		0.1

Intersection Summary			
HCM 6th Ctrl Delay			11.1
HCM 6th LOS			B

Intersection	
Int Delay, s/veh	2.1

Movement	EBL	EBT	WBT	WBR	SBL	SBR
Lane Configurations						
Traffic Vol, veh/h	61	385	65	14	14	62
Future Vol, veh/h	61	385	65	14	14	62
Conflicting Peds, #/hr	0	0	0	0	0	0
Sign Control	Free	Free	Free	Free	Stop	Stop
RT Channelized	-	None	-	None	-	None
Storage Length	450	-	-	-	0	-
Veh in Median Storage, #	-	0	0	-	0	-
Grade, %	-	0	0	-	0	-
Peak Hour Factor	89	89	89	89	89	89
Heavy Vehicles, %	2	2	2	2	49	49
Mvmt Flow	69	433	73	16	16	70

Major/Minor	Major1		Major2		Minor2	
Conflicting Flow All	89	0	-	0	652	81
Stage 1	-	-	-	-	81	-
Stage 2	-	-	-	-	571	-
Critical Hdwy	4.12	-	-	-	6.89	6.69
Critical Hdwy Stg 1	-	-	-	-	5.89	-
Critical Hdwy Stg 2	-	-	-	-	5.89	-
Follow-up Hdwy	2.218	-	-	-	3.941	3.741
Pot Cap-1 Maneuver	1506	-	-	-	367	863
Stage 1	-	-	-	-	836	-
Stage 2	-	-	-	-	483	-
Platoon blocked, %		-	-	-		
Mov Cap-1 Maneuver	1506	-	-	-	350	863
Mov Cap-2 Maneuver	-	-	-	-	350	-
Stage 1	-	-	-	-	798	-
Stage 2	-	-	-	-	483	-

Approach	EB	WB	SB
HCM Control Delay, s	1	0	11.1
HCM LOS			B

Minor Lane/Major Mvmt	EBL	EBT	WBT	WBR	SBLn1
Capacity (veh/h)	1506	-	-	-	680
HCM Lane V/C Ratio	0.046	-	-	-	0.126
HCM Control Delay (s)	7.5	-	-	-	11.1
HCM Lane LOS	A	-	-	-	B
HCM 95th %tile Q(veh)	0.1	-	-	-	0.4

Intersection	
Int Delay, s/veh	6.4

Movement	EBL	EBT	EBR	WBL	WBT	WBR	NBL	NBT	NBR	SBL	SBT	SBR
Lane Configurations												
Traffic Vol, veh/h	0	241	15	5	127	0	100	5	190	5	0	0
Future Vol, veh/h	0	241	15	5	127	0	100	5	190	5	0	0
Conflicting Peds, #/hr	0	0	0	0	0	0	0	0	0	0	0	0
Sign Control	Free	Free	Free	Free	Free	Free	Stop	Stop	Stop	Stop	Stop	Stop
RT Channelized	-	-	None	-	-	None	-	-	None	-	-	None
Storage Length	-	-	-	-	-	-	-	-	-	-	-	-
Veh in Median Storage, #	-	0	-	-	0	-	-	0	-	-	0	-
Grade, %	-	0	-	-	0	-	-	0	-	-	0	-
Peak Hour Factor	89	89	89	89	89	89	89	89	89	89	89	89
Heavy Vehicles, %	4	4	4	30	30	30	1	1	1	0	0	0
Mvmt Flow	0	271	17	6	143	0	112	6	213	6	0	0

Major/Minor	Major1			Major2			Minor1			Minor2		
Conflicting Flow All	143	0	0	288	0	0	435	435	144	294	443	143
Stage 1	-	-	-	-	-	-	280	280	-	155	155	-
Stage 2	-	-	-	-	-	-	155	155	-	139	288	-
Critical Hdwy	4.16	-	-	4.55	-	-	7.315	6.515	6.915	7.3	6.5	6.2
Critical Hdwy Stg 1	-	-	-	-	-	-	6.515	5.515	-	6.1	5.5	-
Critical Hdwy Stg 2	-	-	-	-	-	-	6.115	5.515	-	6.5	5.5	-
Follow-up Hdwy	2.238	-	-	2.485	-	-	3.5095	4.0095	3.3095	3.5	4	3.3
Pot Cap-1 Maneuver	1425	-	-	1110	-	-	520	516	881	651	512	910
Stage 1	-	-	-	-	-	-	706	681	-	852	773	-
Stage 2	-	-	-	-	-	-	849	771	-	856	677	-
Platoon blocked, %		-	-		-	-						
Mov Cap-1 Maneuver	1425	-	-	1110	-	-	517	513	881	487	509	910
Mov Cap-2 Maneuver	-	-	-	-	-	-	517	513	-	487	509	-
Stage 1	-	-	-	-	-	-	706	681	-	852	768	-
Stage 2	-	-	-	-	-	-	844	766	-	643	677	-

Approach	EB	WB	NB	SB
HCM Control Delay, s	0	0.3	14.6	12.5
HCM LOS			B	B

Minor Lane/Major Mvmt	NBLn1	EBL	EBT	EBR	WBL	WBT	WBR	SBLn1
Capacity (veh/h)	704	1425	-	-	1110	-	-	487
HCM Lane V/C Ratio	0.471	-	-	-	0.005	-	-	0.012
HCM Control Delay (s)	14.6	0	-	-	8.3	0	-	12.5
HCM Lane LOS	B	A	-	-	A	A	-	B
HCM 95th %tile Q(veh)	2.5	0	-	-	0	-	-	0

Movement	WBL	WBR	NBT	NBR	SBL	SBT
Lane Configurations						
Traffic Volume (veh/h)	35	182	970	190	81	325
Future Volume (veh/h)	35	182	970	190	81	325
Initial Q (Qb), veh	0	0	0	0	0	0
Ped-Bike Adj(A_pbT)	1.00	1.00		1.00	1.00	
Parking Bus, Adj	1.00	1.00	1.00	1.00	1.00	1.00
Work Zone On Approach	No		No			No
Adj Sat Flow, veh/h/ln	1618	1618	1856	1856	1826	1826
Adj Flow Rate, veh/h	38	196	1043	204	87	349
Peak Hour Factor	0.93	0.93	0.93	0.93	0.93	0.93
Percent Heavy Veh, %	19	19	3	3	5	5
Cap, veh/h	36	184	1024	200	107	1369
Arrive On Green	0.16	0.16	0.68	0.68	0.03	0.75
Sat Flow, veh/h	226	1165	1508	295	1739	1826
Grp Volume(v), veh/h	235	0	0	1247	87	349
Grp Sat Flow(s),veh/h/ln	1397	0	0	1802	1739	1826
Q Serve(g_s), s	24.5	0.0	0.0	105.5	3.5	9.2
Cycle Q Clear(g_c), s	24.5	0.0	0.0	105.5	3.5	9.2
Prop In Lane	0.16	0.83		0.16	1.00	
Lane Grp Cap(c), veh/h	220	0	0	1224	107	1369
V/C Ratio(X)	1.07	0.00	0.00	1.02	0.81	0.26
Avail Cap(c_a), veh/h	220	0	0	1224	115	1369
HCM Platoon Ratio	1.00	1.00	1.00	1.00	1.00	1.00
Upstream Filter(I)	1.00	0.00	0.00	1.00	1.00	1.00
Uniform Delay (d), s/veh	65.4	0.0	0.0	24.9	50.5	6.0
Incr Delay (d2), s/veh	79.2	0.0	0.0	30.5	34.5	0.1
Initial Q Delay(d3),s/veh	0.0	0.0	0.0	0.0	0.0	0.0
%ile BackOfQ(50%),veh/ln	13.6	0.0	0.0	52.2	3.4	3.5
Unsig. Movement Delay, s/veh						
LnGrp Delay(d),s/veh	144.6	0.0	0.0	55.4	85.0	6.2
LnGrp LOS	F	A	A	F	F	A
Approach Vol, veh/h	235		1247			436
Approach Delay, s/veh	144.6		55.4			21.9
Approach LOS	F		E			C

Timer - Assigned Phs	1	2				6	8
Phs Duration (G+Y+Rc), s	10.9	113.6				124.5	30.8
Change Period (Y+Rc), s	5.5	* 8.1				* 8.1	6.3
Max Green Setting (Gmax), s	6.1	* 1.1E2				* 1.2E2	24.5
Max Q Clear Time (g_c+I1), s	5.5	107.5				11.2	26.5
Green Ext Time (p_c), s	0.0	0.0				3.6	0.0

Intersection Summary	
HCM 6th Ctrl Delay	58.7
HCM 6th LOS	E

Notes

User approved pedestrian interval to be less than phase max green.

User approved volume balancing among the lanes for turning movement.

* HCM 6th computational engine requires equal clearance times for the phases crossing the barrier.

Movement	EBL	EBR	NBL	NBT	SBT	SBR
Lane Configurations						
Traffic Volume (vph)	80	61	81	1305	165	50
Future Volume (vph)	80	61	81	1305	165	50
Ideal Flow (vphpl)	1900	1900	1900	1900	1900	1900
Total Lost time (s)	5.0	5.0	6.5	6.5	6.5	6.5
Lane Util. Factor	1.00	1.00	1.00	1.00	1.00	1.00
Frt	1.00	0.85	1.00	1.00	1.00	0.85
Flt Protected	0.95	1.00	0.95	1.00	1.00	1.00
Satd. Flow (prot)	1641	1468	1752	1845	1743	1482
Flt Permitted	0.95	1.00	0.56	1.00	1.00	1.00
Satd. Flow (perm)	1641	1468	1034	1845	1743	1482
Peak-hour factor, PHF	0.92	0.92	0.92	0.92	0.92	0.92
Adj. Flow (vph)	87	66	88	1418	179	54
RTOR Reduction (vph)	0	60	0	0	0	22
Lane Group Flow (vph)	87	6	88	1418	179	32
Heavy Vehicles (%)	10%	10%	3%	3%	9%	9%
Turn Type	custom	custom	pm+pt	NA	NA	Perm
Protected Phases	3	3	5	2	6	
Permitted Phases	4	4	2			6
Actuated Green, G (s)	6.9	6.9	54.3	54.3	43.3	43.3
Effective Green, g (s)	6.9	6.9	54.3	54.3	43.3	43.3
Actuated g/C Ratio	0.09	0.09	0.75	0.75	0.60	0.60
Clearance Time (s)	5.0	5.0	6.5	6.5	6.5	6.5
Vehicle Extension (s)	2.0	2.0	2.0	5.0	5.0	5.0
Lane Grp Cap (vph)	155	139	816	1378	1038	882
v/s Ratio Prot	c0.05	0.00	0.01	c0.77	0.10	
v/s Ratio Perm			0.07			0.02
v/c Ratio	0.56	0.05	0.11	1.03	0.17	0.04
Uniform Delay, d1	31.5	29.9	2.8	9.2	6.6	6.1
Progression Factor	1.00	1.00	1.00	1.00	1.00	1.00
Incremental Delay, d2	2.8	0.0	0.0	32.0	0.2	0.0
Delay (s)	34.2	30.0	2.8	41.2	6.8	6.1
Level of Service	C	C	A	D	A	A
Approach Delay (s)	32.4			38.9	6.6	
Approach LOS	C			D	A	

Intersection Summary			
HCM 2000 Control Delay	34.4	HCM 2000 Level of Service	C
HCM 2000 Volume to Capacity ratio	1.16		
Actuated Cycle Length (s)	72.7	Sum of lost time (s)	21.0
Intersection Capacity Utilization	82.7%	ICU Level of Service	E
Analysis Period (min)	15		
c Critical Lane Group			

Movement	EBL	EBR	NBL	NBT	SBT	SBR
Lane Configurations						
Traffic Volume (vph)	341	58	23	1045	170	56
Future Volume (vph)	341	58	23	1045	170	56
Ideal Flow (vphpl)	1900	1900	1900	1900	1900	1900
Total Lost time (s)	5.0	5.0	6.0	6.0	6.0	5.0
Lane Util. Factor	1.00	1.00	1.00	1.00	1.00	1.00
Frt	1.00	0.85	1.00	1.00	1.00	0.85
Flt Protected	0.95	1.00	0.95	1.00	1.00	1.00
Satd. Flow (prot)	1770	1583	1752	1845	1810	1538
Flt Permitted	0.95	1.00	0.60	1.00	1.00	1.00
Satd. Flow (perm)	1770	1583	1108	1845	1810	1538
Peak-hour factor, PHF	0.91	0.91	0.91	0.91	0.91	0.91
Adj. Flow (vph)	375	64	25	1148	187	62
RTOR Reduction (vph)	0	48	0	0	0	7
Lane Group Flow (vph)	375	16	25	1148	187	55
Heavy Vehicles (%)	2%	2%	3%	3%	5%	5%
Turn Type	custom	custom	pm+pt	NA	NA	pm+ov
Protected Phases	3	3	5	2	6	3
Permitted Phases	4	4	2			6
Actuated Green, G (s)	43.7	43.7	125.3	125.3	115.8	159.5
Effective Green, g (s)	43.7	43.7	125.3	125.3	115.8	159.5
Actuated g/C Ratio	0.24	0.24	0.70	0.70	0.64	0.89
Clearance Time (s)	5.0	5.0	6.0	6.0	6.0	5.0
Vehicle Extension (s)	2.0	2.0	2.0	2.0	2.0	2.0
Lane Grp Cap (vph)	429	384	783	1284	1164	1362
v/s Ratio Prot	c0.21	0.01	0.00	c0.62	0.10	0.01
v/s Ratio Perm			0.02			0.03
v/c Ratio	0.87	0.04	0.03	0.89	0.16	0.04
Uniform Delay, d1	65.5	52.1	8.6	22.0	12.8	1.2
Progression Factor	1.00	1.00	1.00	1.00	1.00	1.00
Incremental Delay, d2	17.1	0.0	0.0	9.8	0.3	0.0
Delay (s)	82.6	52.1	8.6	31.8	13.1	1.2
Level of Service	F	D	A	C	B	A
Approach Delay (s)	78.2			31.3	10.1	
Approach LOS	E			C	B	

Intersection Summary			
HCM 2000 Control Delay	39.5	HCM 2000 Level of Service	D
HCM 2000 Volume to Capacity ratio	0.94		
Actuated Cycle Length (s)	180.0	Sum of lost time (s)	20.0
Intersection Capacity Utilization	83.1%	ICU Level of Service	E
Analysis Period (min)	15		
c Critical Lane Group			

Intersection	
Int Delay, s/veh	0.8

Movement	EBL	EBT	EBR	WBL	WBT	WBR	NBL	NBT	NBR	SBL	SBT	SBR
Lane Configurations												
Traffic Vol, veh/h	0	0	0	15	0	15	10	978	0	0	60	98
Future Vol, veh/h	0	0	0	15	0	15	10	978	0	0	60	98
Conflicting Peds, #/hr	0	0	0	0	0	0	0	0	0	0	0	0
Sign Control	Stop	Stop	Stop	Stop	Stop	Stop	Free	Free	Free	Free	Free	Free
RT Channelized	-	-	None	-	-	None	-	-	None	-	-	None
Storage Length	-	-	-	-	-	500	175	-	-	-	-	375
Veh in Median Storage, #	-	1	-	-	0	-	-	0	-	-	0	-
Grade, %	-	0	-	-	0	-	-	0	-	-	0	-
Peak Hour Factor	83	83	83	83	83	83	83	83	83	83	83	83
Heavy Vehicles, %	0	0	0	19	19	19	3	3	3	4	4	4
Mvmt Flow	0	0	0	18	0	18	12	1178	0	0	72	118

Major/Minor	Minor1			Major1			Major2		
Conflicting Flow All	1333	1392	1178	190	0	-	-	-	0
Stage 1	1202	1202	-	-	-	-	-	-	-
Stage 2	131	190	-	-	-	-	-	-	-
Critical Hdwy	6.59	6.69	6.39	4.13	-	-	-	-	-
Critical Hdwy Stg 1	5.59	5.69	-	-	-	-	-	-	-
Critical Hdwy Stg 2	5.59	5.69	-	-	-	-	-	-	-
Follow-up Hdwy	3.671	4.171	3.471	2.227	-	-	-	-	-
Pot Cap-1 Maneuver	156	131	214	1378	-	0	0	-	-
Stage 1	263	239	-	-	-	0	0	-	-
Stage 2	855	712	-	-	-	0	0	-	-
Platoon blocked, %					-			-	-
Mov Cap-1 Maneuver	155	0	214	1378	-	-	-	-	-
Mov Cap-2 Maneuver	155	0	-	-	-	-	-	-	-
Stage 1	261	0	-	-	-	-	-	-	-
Stage 2	855	0	-	-	-	-	-	-	-

Approach	WB	NB	SB
HCM Control Delay, s	27.4	0.1	0
HCM LOS	D		

Minor Lane/Major Mvmt	NBL	NBT	WBLn1	WBLn2	SBT	SBR
Capacity (veh/h)	1378	-	155	214	-	-
HCM Lane V/C Ratio	0.009	-	0.117	0.084	-	-
HCM Control Delay (s)	7.6	-	31.3	23.4	-	-
HCM Lane LOS	A	-	D	C	-	-
HCM 95th %tile Q(veh)	0	-	0.4	0.3	-	-

Movement	EBL	EBR	NBL	NBT	SBT	SBR
Lane Configurations						
Traffic Volume (veh/h)	628	10	90	360	70	5
Future Volume (veh/h)	628	10	90	360	70	5
Initial Q (Qb), veh	0	0	0	0	0	0
Ped-Bike Adj(A_pbT)	1.00	1.00	1.00			1.00
Parking Bus, Adj	1.00	1.00	1.00	1.00	1.00	1.00
Work Zone On Approach	No			No	No	
Adj Sat Flow, veh/h/ln	1856	1856	1870	1870	1811	1811
Adj Flow Rate, veh/h	766	12	110	439	85	6
Peak Hour Factor	0.82	0.82	0.82	0.82	0.82	0.82
Percent Heavy Veh, %	3	3	2	2	6	6
Cap, veh/h	816	726	166	569	657	46
Arrive On Green	0.46	0.46	0.39	0.39	0.39	0.39
Sat Flow, veh/h	1767	1572	295	1448	1672	118
Grp Volume(v), veh/h	766	12	549	0	0	91
Grp Sat Flow(s),veh/h/ln	1767	1572	1743	0	0	1790
Q Serve(g_s), s	35.7	0.4	19.1	0.0	0.0	2.8
Cycle Q Clear(g_c), s	35.7	0.4	24.0	0.0	0.0	2.8
Prop In Lane	1.00	1.00	0.20			0.07
Lane Grp Cap(c), veh/h	816	726	734	0	0	703
V/C Ratio(X)	0.94	0.02	0.75	0.00	0.00	0.13
Avail Cap(c_a), veh/h	992	883	1223	0	0	703
HCM Platoon Ratio	1.00	1.00	1.00	1.00	1.00	1.00
Upstream Filter(I)	1.00	1.00	1.00	0.00	0.00	1.00
Uniform Delay (d), s/veh	22.2	12.6	23.1	0.0	0.0	16.8
Incr Delay (d2), s/veh	14.2	0.0	3.3	0.0	0.0	0.2
Initial Q Delay(d3),s/veh	0.0	0.0	0.0	0.0	0.0	0.0
%ile BackOfQ(50%),veh/ln	16.8	0.1	10.0	0.0	0.0	1.2
Unsig. Movement Delay, s/veh						
LnGrp Delay(d),s/veh	36.4	12.7	26.4	0.0	0.0	17.0
LnGrp LOS	D	B	C	A	A	B
Approach Vol, veh/h	778			549	91	
Approach Delay, s/veh	36.0			26.4	17.0	
Approach LOS	D			C	B	

Timer - Assigned Phs		2		4		6
Phs Duration (G+Y+Rc), s		40.4		46.4		40.4
Change Period (Y+Rc), s		6.3		6.3		6.3
Max Green Setting (Gmax), s		58.7		48.7		33.7
Max Q Clear Time (g_c+I1), s		26.0		37.7		4.8
Green Ext Time (p_c), s		8.0		2.4		0.9

Intersection Summary	
HCM 6th Ctrl Delay	31.1
HCM 6th LOS	C

Movement	EBL	EBT	EBR	WBL	WBT	WBR	NBL	NBT	NBR	SBL	SBT	SBR
Lane Configurations												
Traffic Volume (veh/h)	185	10	25	5	0	5	10	1142	0	5	401	70
Future Volume (veh/h)	185	10	25	5	0	5	10	1142	0	5	401	70
Initial Q (Qb), veh	0	0	0	0	0	0	0	0	0	0	0	0
Ped-Bike Adj(A_pbT)	1.00		1.00	1.00		1.00	1.00		1.00	1.00		1.00
Parking Bus, Adj	1.00	1.00	1.00	1.00	1.00	1.00	1.00	1.00	1.00	1.00	1.00	1.00
Work Zone On Approach		No			No			No			No	
Adj Sat Flow, veh/h/ln	1885	1885	1885	1693	1693	1693	1752	1752	1752	1648	1648	1648
Adj Flow Rate, veh/h	201	11	27	5	0	5	11	1241	0	5	436	76
Peak Hour Factor	0.92	0.92	0.92	0.92	0.92	0.92	0.92	0.92	0.92	0.92	0.92	0.92
Percent Heavy Veh, %	1	1	1	14	14	14	10	10	10	17	17	17
Cap, veh/h	211	9	22	268	0	253	530	1191	0	58	1115	945
Arrive On Green	0.13	0.13	0.13	0.00	0.00	0.18	0.01	0.68	0.00	0.00	0.68	0.68
Sat Flow, veh/h	1225	67	165	1612	0	1434	1668	1752	0	1570	1648	1397
Grp Volume(v), veh/h	239	0	0	5	0	5	11	1241	0	5	436	76
Grp Sat Flow(s),veh/h/ln	1457	0	0	1612	0	1434	1668	1752	0	1570	1648	1397
Q Serve(g_s), s	18.6	0.0	0.0	0.4	0.0	0.4	0.3	94.9	0.0	0.1	16.2	2.6
Cycle Q Clear(g_c), s	18.6	0.0	0.0	0.4	0.0	0.4	0.3	94.9	0.0	0.1	16.2	2.6
Prop In Lane	0.84		0.11	1.00		1.00	1.00		0.00	1.00		1.00
Lane Grp Cap(c), veh/h	242	0	0	268	0	253	530	1191	0	58	1115	945
V/C Ratio(X)	0.99	0.00	0.00	0.02	0.00	0.02	0.02	1.04	0.00	0.09	0.39	0.08
Avail Cap(c_a), veh/h	242	0	0	348	0	335	565	1191	0	97	1121	950
HCM Platoon Ratio	1.00	1.00	1.00	1.00	1.00	1.00	1.00	1.00	1.00	1.00	1.00	1.00
Upstream Filter(I)	1.00	0.00	0.00	1.00	0.00	1.00	1.00	1.00	0.00	1.00	1.00	1.00
Uniform Delay (d), s/veh	62.2	0.0	0.0	50.4	0.0	47.5	8.0	22.3	0.0	39.1	9.9	7.7
Incr Delay (d2), s/veh	54.7	0.0	0.0	0.0	0.0	0.0	0.0	37.6	0.0	0.6	0.5	0.1
Initial Q Delay(d3),s/veh	0.0	0.0	0.0	0.0	0.0	0.0	0.0	0.0	0.0	0.0	0.0	0.0
%ile BackOfQ(50%),veh/ln	12.2	0.0	0.0	0.2	0.0	0.1	0.1	47.9	0.0	0.1	5.9	0.8
Unsig. Movement Delay, s/veh												
LnGrp Delay(d),s/veh	116.9	0.0	0.0	50.4	0.0	47.5	8.0	60.0	0.0	39.7	10.4	7.8
LnGrp LOS	F	A	A	D	A	D	A	F	A	D	B	A
Approach Vol, veh/h		239			10			1252			517	
Approach Delay, s/veh		116.9			49.0			59.5			10.3	
Approach LOS		F			D			E			B	

Timer - Assigned Phs	1	2	3	4	5	6		8
Phs Duration (G+Y+Rc), s	6.0	102.0	6.0	25.5	6.5	101.5		31.5
Change Period (Y+Rc), s	5.5	7.1	5.5	6.9	5.5	7.1		* 6.9
Max Green Setting (Gmax), s	4.0	94.9	7.5	18.6	4.0	94.9		* 33
Max Q Clear Time (g_c+I1), s	2.1	96.9	2.4	20.6	2.3	18.2		2.4
Green Ext Time (p_c), s	0.0	0.0	0.0	0.0	0.0	7.5		0.0

Intersection Summary	
HCM 6th Ctrl Delay	53.6
HCM 6th LOS	D

Notes

* HCM 6th computational engine requires equal clearance times for the phases crossing the barrier.

Intersection	
Int Delay, s/veh	3.6

Movement	EBL	EBT	WBT	WBR	SBL	SBR
Lane Configurations						
Traffic Vol, veh/h	64	105	110	14	10	61
Future Vol, veh/h	64	105	110	14	10	61
Conflicting Peds, #/hr	0	0	0	0	0	0
Sign Control	Free	Free	Free	Free	Stop	Stop
RT Channelized	-	None	-	None	-	None
Storage Length	450	-	-	-	0	-
Veh in Median Storage, #	-	0	0	-	0	-
Grade, %	-	0	0	-	0	-
Peak Hour Factor	82	82	82	82	82	82
Heavy Vehicles, %	86	86	77	77	54	54
Mvmt Flow	78	128	134	17	12	74

Major/Minor	Major1		Major2		Minor2	
Conflicting Flow All	151	0	-	0	427	143
Stage 1	-	-	-	-	143	-
Stage 2	-	-	-	-	284	-
Critical Hdwy	4.96	-	-	-	6.94	6.74
Critical Hdwy Stg 1	-	-	-	-	5.94	-
Critical Hdwy Stg 2	-	-	-	-	5.94	-
Follow-up Hdwy	2.974	-	-	-	3.986	3.786
Pot Cap-1 Maneuver	1046	-	-	-	498	784
Stage 1	-	-	-	-	771	-
Stage 2	-	-	-	-	659	-
Platoon blocked, %		-	-	-		
Mov Cap-1 Maneuver	1046	-	-	-	461	784
Mov Cap-2 Maneuver	-	-	-	-	461	-
Stage 1	-	-	-	-	713	-
Stage 2	-	-	-	-	659	-

Approach	EB	WB	SB
HCM Control Delay, s	3.3	0	10.7
HCM LOS			B

Minor Lane/Major Mvmt	EBL	EBT	WBT	WBR	SBLn1
Capacity (veh/h)	1046	-	-	-	714
HCM Lane V/C Ratio	0.075	-	-	-	0.121
HCM Control Delay (s)	8.7	-	-	-	10.7
HCM Lane LOS	A	-	-	-	B
HCM 95th %tile Q(veh)	0.2	-	-	-	0.4

Intersection	
Int Delay, s/veh	4.3

Movement	EBL	EBT	EBR	WBL	WBT	WBR	NBL	NBT	NBR	SBL	SBT	SBR
Lane Configurations												
Traffic Vol, veh/h	35	154	50	15	146	5	55	0	10	5	10	35
Future Vol, veh/h	35	154	50	15	146	5	55	0	10	5	10	35
Conflicting Peds, #/hr	0	0	0	0	0	0	0	0	0	0	0	0
Sign Control	Free	Free	Free	Free	Free	Free	Stop	Stop	Stop	Stop	Stop	Stop
RT Channelized	-	-	None	-	-	None	-	-	None	-	-	None
Storage Length	-	-	-	-	-	-	-	-	-	-	-	-
Veh in Median Storage, #	-	0	-	-	0	-	-	0	-	-	0	-
Grade, %	-	0	-	-	0	-	-	0	-	-	0	-
Peak Hour Factor	82	82	82	82	82	82	82	82	82	82	82	82
Heavy Vehicles, %	36	36	36	30	30	30	35	35	35	91	91	91
Mvmt Flow	43	188	61	18	178	6	67	0	12	6	12	43

Major/Minor	Major1			Major2			Minor1			Minor2		
Conflicting Flow All	184	0	0	249	0	0	550	525	125	397	552	181
Stage 1	-	-	-	-	-	-	305	305	-	217	217	-
Stage 2	-	-	-	-	-	-	245	220	-	180	335	-
Critical Hdwy	4.64	-	-	4.55	-	-	7.825	7.025	7.425	8.665	7.865	7.565
Critical Hdwy Stg 1	-	-	-	-	-	-	7.025	6.025	-	7.465	6.865	-
Critical Hdwy Stg 2	-	-	-	-	-	-	6.625	6.025	-	7.865	6.865	-
Follow-up Hdwy	2.542	-	-	2.485	-	-	3.8325	4.3325	3.6325	4.3645	4.8645	4.1645
Pot Cap-1 Maneuver	1191	-	-	1151	-	-	375	402	815	400	314	655
Stage 1	-	-	-	-	-	-	607	596	-	598	565	-
Stage 2	-	-	-	-	-	-	680	654	-	620	486	-
Platoon blocked, %		-	-		-	-						
Mov Cap-1 Maneuver	1191	-	-	1151	-	-	324	379	815	376	296	655
Mov Cap-2 Maneuver	-	-	-	-	-	-	324	379	-	376	296	-
Stage 1	-	-	-	-	-	-	582	571	-	573	555	-
Stage 2	-	-	-	-	-	-	611	643	-	585	466	-

Approach	EB	WB	NB	SB
HCM Control Delay, s	1.3	0.7	17.9	13.3
HCM LOS			C	B

Minor Lane/Major Mvmt	NBLn1	EBL	EBT	EBR	WBL	WBT	WBR	SBLn1
Capacity (veh/h)	357	1191	-	-	1151	-	-	497
HCM Lane V/C Ratio	0.222	0.036	-	-	0.016	-	-	0.123
HCM Control Delay (s)	17.9	8.1	0.1	-	8.2	0	-	13.3
HCM Lane LOS	C	A	A	-	A	A	-	B
HCM 95th %tile Q(veh)	0.8	0.1	-	-	0	-	-	0.4

Movement	WBL	WBR	NBT	NBR	SBL	SBT
Lane Configurations						
Traffic Volume (veh/h)	81	160	440	105	144	450
Future Volume (veh/h)	81	160	440	105	144	450
Initial Q (Qb), veh	0	0	0	0	0	0
Ped-Bike Adj(A_pbT)	1.00	1.00		1.00	1.00	
Parking Bus, Adj	1.00	1.00	1.00	1.00	1.00	1.00
Work Zone On Approach	No		No			No
Adj Sat Flow, veh/h/ln	1233	1233	1796	1796	1678	1678
Adj Flow Rate, veh/h	88	174	478	114	157	489
Peak Hour Factor	0.92	0.92	0.92	0.92	0.92	0.92
Percent Heavy Veh, %	45	45	7	7	15	15
Cap, veh/h	97	192	521	124	256	880
Arrive On Green	0.27	0.27	0.37	0.37	0.07	0.52
Sat Flow, veh/h	363	718	1402	334	1598	1678
Grp Volume(v), veh/h	263	0	0	592	157	489
Grp Sat Flow(s),veh/h/ln	1086	0	0	1736	1598	1678
Q Serve(g_s), s	16.2	0.0	0.0	22.5	4.0	13.5
Cycle Q Clear(g_c), s	16.2	0.0	0.0	22.5	4.0	13.5
Prop In Lane	0.33	0.66		0.19	1.00	
Lane Grp Cap(c), veh/h	291	0	0	645	256	880
V/C Ratio(X)	0.91	0.00	0.00	0.92	0.61	0.56
Avail Cap(c_a), veh/h	372	0	0	677	256	894
HCM Platoon Ratio	1.00	1.00	1.00	1.00	1.00	1.00
Upstream Filter(I)	1.00	0.00	0.00	1.00	1.00	1.00
Uniform Delay (d), s/veh	24.5	0.0	0.0	20.8	15.8	11.1
Incr Delay (d2), s/veh	21.4	0.0	0.0	17.6	5.1	1.0
Initial Q Delay(d3),s/veh	0.0	0.0	0.0	0.0	0.0	0.0
%ile BackOfQ(50%),veh/ln	5.6	0.0	0.0	11.4	1.6	4.6
Unsig. Movement Delay, s/veh						
LnGrp Delay(d),s/veh	45.9	0.0	0.0	38.3	20.9	12.0
LnGrp LOS	D	A	A	D	C	B
Approach Vol, veh/h	263		592			646
Approach Delay, s/veh	45.9		38.3			14.2
Approach LOS	D		D			B

Timer - Assigned Phs	1	2				6	8
Phs Duration (G+Y+Rc), s	10.6	33.8				44.4	24.8
Change Period (Y+Rc), s	5.5	* 8.1				* 8.1	6.3
Max Green Setting (Gmax), s	5.1	* 27				* 37	23.7
Max Q Clear Time (g_c+I1), s	6.0	24.5				15.5	18.2
Green Ext Time (p_c), s	0.0	1.2				4.5	0.4

Intersection Summary	
HCM 6th Ctrl Delay	29.2
HCM 6th LOS	C

Notes

User approved pedestrian interval to be less than phase max green.

User approved volume balancing among the lanes for turning movement.

* HCM 6th computational engine requires equal clearance times for the phases crossing the barrier.

Movement	EBL	EBR	NBL	NBT	SBT	SBR
Lane Configurations						
Traffic Volume (vph)	70	71	91	436	375	90
Future Volume (vph)	70	71	91	436	375	90
Ideal Flow (vphpl)	1900	1900	1900	1900	1900	1900
Total Lost time (s)	5.0	5.0	6.5	6.5	6.5	6.5
Lane Util. Factor	1.00	1.00	1.00	1.00	1.00	1.00
Frt	1.00	0.85	1.00	1.00	1.00	0.85
Flt Protected	0.95	1.00	0.95	1.00	1.00	1.00
Satd. Flow (prot)	1671	1495	1719	1810	1792	1524
Flt Permitted	0.95	1.00	0.39	1.00	1.00	1.00
Satd. Flow (perm)	1671	1495	699	1810	1792	1524
Peak-hour factor, PHF	0.96	0.96	0.96	0.96	0.96	0.96
Adj. Flow (vph)	73	74	95	454	391	94
RTOR Reduction (vph)	0	66	0	0	0	44
Lane Group Flow (vph)	73	8	95	454	391	51
Heavy Vehicles (%)	8%	8%	5%	5%	6%	6%
Turn Type	custom	custom	pm+pt	NA	NA	Perm
Protected Phases	3	3	5	2	6	
Permitted Phases	4	4	2			6
Actuated Green, G (s)	5.5	5.5	35.0	35.0	23.0	23.0
Effective Green, g (s)	5.5	5.5	35.0	35.0	23.0	23.0
Actuated g/C Ratio	0.11	0.11	0.67	0.67	0.44	0.44
Clearance Time (s)	5.0	5.0	6.5	6.5	6.5	6.5
Vehicle Extension (s)	2.0	2.0	2.0	5.0	5.0	5.0
Lane Grp Cap (vph)	176	158	578	1218	792	674
v/s Ratio Prot	c0.04	0.01	0.02	c0.25	c0.22	
v/s Ratio Perm			0.09			0.03
v/c Ratio	0.41	0.05	0.16	0.37	0.49	0.07
Uniform Delay, d1	21.7	20.9	3.6	3.7	10.3	8.4
Progression Factor	1.00	1.00	1.00	1.00	1.00	1.00
Incremental Delay, d2	0.6	0.0	0.0	0.4	1.0	0.1
Delay (s)	22.3	20.9	3.7	4.1	11.4	8.5
Level of Service	C	C	A	A	B	A
Approach Delay (s)	21.6			4.0	10.8	
Approach LOS	C			A	B	

Intersection Summary			
HCM 2000 Control Delay	9.0	HCM 2000 Level of Service	A
HCM 2000 Volume to Capacity ratio	0.55		
Actuated Cycle Length (s)	52.0	Sum of lost time (s)	21.0
Intersection Capacity Utilization	43.9%	ICU Level of Service	A
Analysis Period (min)	15		
c Critical Lane Group			

Movement	EBL	EBR	NBL	NBT	SBT	SBR
Lane Configurations						
Traffic Volume (vph)	177	13	13	350	300	146
Future Volume (vph)	177	13	13	350	300	146
Ideal Flow (vphpl)	1900	1900	1900	1900	1900	1900
Total Lost time (s)	5.0	5.0	6.0	6.0	6.0	5.0
Lane Util. Factor	1.00	1.00	1.00	1.00	1.00	1.00
Frpb, ped/bikes	1.00	1.00	1.00	1.00	1.00	0.99
Flpb, ped/bikes	1.00	1.00	1.00	1.00	1.00	1.00
Frt	1.00	0.85	1.00	1.00	1.00	0.85
Flt Protected	0.95	1.00	0.95	1.00	1.00	1.00
Satd. Flow (prot)	1671	1495	1736	1827	1792	1506
Flt Permitted	0.95	1.00	0.39	1.00	1.00	1.00
Satd. Flow (perm)	1671	1495	706	1827	1792	1506
Peak-hour factor, PHF	0.95	0.95	0.95	0.95	0.95	0.95
Adj. Flow (vph)	186	14	14	368	316	154
RTOR Reduction (vph)	0	11	0	0	0	68
Lane Group Flow (vph)	186	3	14	368	316	86
Confl. Bikes (#/hr)						1
Heavy Vehicles (%)	8%	8%	4%	4%	6%	6%
Turn Type	custom	custom	pm+pt	NA	NA	pm+ov
Protected Phases	3	3	5	2	6	3
Permitted Phases	4	4	2			6
Actuated Green, G (s)	9.9	9.9	19.4	19.4	12.7	22.6
Effective Green, g (s)	9.9	9.9	19.4	19.4	12.7	22.6
Actuated g/C Ratio	0.25	0.25	0.48	0.48	0.32	0.56
Clearance Time (s)	5.0	5.0	6.0	6.0	6.0	5.0
Vehicle Extension (s)	2.0	2.0	2.0	2.0	2.0	2.0
Lane Grp Cap (vph)	410	367	357	879	564	844
v/s Ratio Prot	c0.11	0.00	0.00	c0.20	c0.18	0.03
v/s Ratio Perm			0.02			0.03
v/c Ratio	0.45	0.01	0.04	0.42	0.56	0.10
Uniform Delay, d1	12.9	11.5	5.9	6.8	11.5	4.1
Progression Factor	1.00	1.00	1.00	1.00	1.00	1.00
Incremental Delay, d2	0.3	0.0	0.0	0.1	0.8	0.0
Delay (s)	13.2	11.5	5.9	6.9	12.2	4.1
Level of Service	B	B	A	A	B	A
Approach Delay (s)	13.1			6.9	9.6	
Approach LOS	B			A	A	

Intersection Summary			
HCM 2000 Control Delay	9.3	HCM 2000 Level of Service	A
HCM 2000 Volume to Capacity ratio	0.66		
Actuated Cycle Length (s)	40.3	Sum of lost time (s)	20.0
Intersection Capacity Utilization	37.4%	ICU Level of Service	A
Analysis Period (min)	15		

c Critical Lane Group

Intersection	
Int Delay, s/veh	1.1

Movement	EBL	EBT	EBR	WBL	WBT	WBR	NBL	NBT	NBR	SBL	SBT	SBR
Lane Configurations												
Traffic Vol, veh/h	0	0	0	25	0	15	20	238	0	0	105	173
Future Vol, veh/h	0	0	0	25	0	15	20	238	0	0	105	173
Conflicting Peds, #/hr	0	0	0	0	0	0	0	0	0	0	0	0
Sign Control	Stop	Stop	Stop	Stop	Stop	Stop	Free	Free	Free	Free	Free	Free
RT Channelized	-	-	None	-	-	None	-	-	None	-	-	None
Storage Length	-	-	-	-	-	500	175	-	-	-	-	375
Veh in Median Storage, #	-	1	-	-	0	-	-	0	-	-	0	-
Grade, %	-	0	-	-	0	-	-	0	-	-	0	-
Peak Hour Factor	92	92	92	92	92	92	92	92	92	92	92	92
Heavy Vehicles, %	0	0	0	7	7	7	6	6	6	4	4	4
Mvmt Flow	0	0	0	27	0	16	22	259	0	0	114	188

Major/Minor	Minor1		Major1			Major2			
Conflicting Flow All	511	605	259	302	0	-	-	-	0
Stage 1	303	303	-	-	-	-	-	-	-
Stage 2	208	302	-	-	-	-	-	-	-
Critical Hdwy	6.47	6.57	6.27	4.16	-	-	-	-	-
Critical Hdwy Stg 1	5.47	5.57	-	-	-	-	-	-	-
Critical Hdwy Stg 2	5.47	5.57	-	-	-	-	-	-	-
Follow-up Hdwy	3.563	4.063	3.363	2.254	-	-	-	-	-
Pot Cap-1 Maneuver	514	405	768	1237	-	0	0	-	-
Stage 1	738	655	-	-	-	0	0	-	-
Stage 2	815	655	-	-	-	0	0	-	-
Platoon blocked, %					-			-	-
Mov Cap-1 Maneuver	505	0	768	1237	-	-	-	-	-
Mov Cap-2 Maneuver	505	0	-	-	-	-	-	-	-
Stage 1	725	0	-	-	-	-	-	-	-
Stage 2	815	0	-	-	-	-	-	-	-

Approach	WB	NB	SB
HCM Control Delay, s	11.5	0.6	0
HCM LOS	B		

Minor Lane/Major Mvmt	NBL	NBT	WBLn1	WBLn2	SBT	SBR
Capacity (veh/h)	1237	-	505	768	-	-
HCM Lane V/C Ratio	0.018	-	0.054	0.021	-	-
HCM Control Delay (s)	8	-	12.5	9.8	-	-
HCM Lane LOS	A	-	B	A	-	-
HCM 95th %tile Q(veh)	0.1	-	0.2	0.1	-	-

Movement	EBL	EBR	NBL	NBT	SBT	SBR
Lane Configurations						
Traffic Volume (veh/h)	163	10	25	115	120	15
Future Volume (veh/h)	163	10	25	115	120	15
Initial Q (Qb), veh	0	0	0	0	0	0
Ped-Bike Adj(A_pbT)	1.00	1.00	1.00			0.98
Parking Bus, Adj	1.00	1.00	1.00	1.00	1.00	1.00
Work Zone On Approach	No			No	No	
Adj Sat Flow, veh/h/ln	1841	1841	1811	1811	1752	1752
Adj Flow Rate, veh/h	187	11	29	132	138	17
Peak Hour Factor	0.87	0.87	0.87	0.87	0.87	0.87
Percent Heavy Veh, %	4	4	6	6	10	10
Cap, veh/h	393	349	230	269	305	38
Arrive On Green	0.22	0.22	0.20	0.20	0.20	0.20
Sat Flow, veh/h	1753	1560	179	1345	1525	188
Grp Volume(v), veh/h	187	11	161	0	0	155
Grp Sat Flow(s),veh/h/ln	1753	1560	1524	0	0	1713
Q Serve(g_s), s	2.0	0.1	0.5	0.0	0.0	1.7
Cycle Q Clear(g_c), s	2.0	0.1	2.3	0.0	0.0	1.7
Prop In Lane	1.00	1.00	0.18			0.11
Lane Grp Cap(c), veh/h	393	349	499	0	0	342
V/C Ratio(X)	0.48	0.03	0.32	0.00	0.00	0.45
Avail Cap(c_a), veh/h	3905	3475	4615	0	0	2641
HCM Platoon Ratio	1.00	1.00	1.00	1.00	1.00	1.00
Upstream Filter(I)	1.00	1.00	1.00	0.00	0.00	1.00
Uniform Delay (d), s/veh	7.4	6.6	7.8	0.0	0.0	7.7
Incr Delay (d2), s/veh	0.9	0.0	0.8	0.0	0.0	2.0
Initial Q Delay(d3),s/veh	0.0	0.0	0.0	0.0	0.0	0.0
%ile BackOfQ(50%),veh/ln	0.5	0.0	0.5	0.0	0.0	0.5
Unsig. Movement Delay, s/veh						
LnGrp Delay(d),s/veh	8.3	6.7	8.6	0.0	0.0	9.7
LnGrp LOS	A	A	A	A	A	A
Approach Vol, veh/h	198			161	155	
Approach Delay, s/veh	8.2			8.6	9.7	
Approach LOS	A			A	A	

Timer - Assigned Phs		2		4		6
Phs Duration (G+Y+Rc), s		10.7		11.2		10.7
Change Period (Y+Rc), s		6.3		6.3		6.3
Max Green Setting (Gmax), s		58.7		48.7		33.7
Max Q Clear Time (g_c+I1), s		4.3		4.0		3.7
Green Ext Time (p_c), s		2.1		0.6		1.7

Intersection Summary	
HCM 6th Ctrl Delay	8.8
HCM 6th LOS	A

Movement	EBL	EBT	EBR	WBL	WBT	WBR	NBL	NBT	NBR	SBL	SBT	SBR
Lane Configurations												
Traffic Volume (veh/h)	100	10	15	5	0	10	15	590	10	15	574	95
Future Volume (veh/h)	100	10	15	5	0	10	15	590	10	15	574	95
Initial Q (Qb), veh	0	0	0	0	0	0	0	0	0	0	0	0
Ped-Bike Adj(A_pbT)	1.00		0.98	1.00		1.00	1.00		0.98	1.00		1.00
Parking Bus, Adj	1.00	1.00	1.00	1.00	1.00	1.00	1.00	1.00	1.00	1.00	1.00	1.00
Work Zone On Approach		No			No			No			No	
Adj Sat Flow, veh/h/ln	1856	1856	1856	1559	1559	1559	1663	1663	1663	1678	1678	1678
Adj Flow Rate, veh/h	105	11	16	5	0	11	16	621	11	16	604	100
Peak Hour Factor	0.95	0.95	0.95	0.95	0.95	0.95	0.95	0.95	0.95	0.95	0.95	0.95
Percent Heavy Veh, %	3	3	3	23	23	23	16	16	16	15	15	15
Cap, veh/h	230	17	21	299	0	270	263	802	14	254	826	700
Arrive On Green	0.12	0.12	0.12	0.00	0.00	0.20	0.01	0.49	0.49	0.01	0.49	0.49
Sat Flow, veh/h	1125	145	175	1485	0	1321	1584	1628	29	1598	1678	1422
Grp Volume(v), veh/h	132	0	0	5	0	11	16	0	632	16	604	100
Grp Sat Flow(s),veh/h/ln	1445	0	0	1485	0	1321	1584	0	1657	1598	1678	1422
Q Serve(g_s), s	5.8	0.0	0.0	0.2	0.0	0.4	0.3	0.0	20.9	0.3	19.1	2.6
Cycle Q Clear(g_c), s	5.9	0.0	0.0	0.2	0.0	0.4	0.3	0.0	20.9	0.3	19.1	2.6
Prop In Lane	0.80		0.12	1.00		1.00	1.00		0.02	1.00		1.00
Lane Grp Cap(c), veh/h	267	0	0	299	0	270	263	0	816	254	826	700
V/C Ratio(X)	0.49	0.00	0.00	0.02	0.00	0.04	0.06	0.00	0.77	0.06	0.73	0.14
Avail Cap(c_a), veh/h	487	0	0	615	0	872	825	0	1435	702	1328	1125
HCM Platoon Ratio	1.00	1.00	1.00	1.00	1.00	1.00	1.00	1.00	1.00	1.00	1.00	1.00
Upstream Filter(I)	1.00	0.00	0.00	1.00	0.00	1.00	1.00	0.00	1.00	1.00	1.00	1.00
Uniform Delay (d), s/veh	28.6	0.0	0.0	24.1	0.0	21.3	11.1	0.0	13.9	11.7	13.5	9.3
Incr Delay (d2), s/veh	2.0	0.0	0.0	0.0	0.0	0.1	0.1	0.0	3.4	0.1	2.7	0.2
Initial Q Delay(d3),s/veh	0.0	0.0	0.0	0.0	0.0	0.0	0.0	0.0	0.0	0.0	0.0	0.0
%ile BackOfQ(50%),veh/ln	2.1	0.0	0.0	0.1	0.0	0.1	0.1	0.0	7.5	0.1	6.8	0.7
Unsig. Movement Delay, s/veh												
LnGrp Delay(d),s/veh	30.6	0.0	0.0	24.1	0.0	21.4	11.2	0.0	17.3	11.8	16.1	9.5
LnGrp LOS	C	A	A	C	A	C	B	A	B	B	B	A
Approach Vol, veh/h		132			16			648			720	
Approach Delay, s/veh		30.6			22.3			17.2			15.1	
Approach LOS		C			C			B			B	

Timer - Assigned Phs	1	2	3	4	5	6		8
Phs Duration (G+Y+Rc), s	6.3	40.0	5.8	14.8	6.3	40.0		20.6
Change Period (Y+Rc), s	5.5	7.1	5.5	6.9	5.5	7.1		* 6.9
Max Green Setting (Gmax), s	19.5	57.9	14.5	18.1	24.5	52.9		* 44
Max Q Clear Time (g_c+I1), s	2.3	22.9	2.2	7.9	2.3	21.1		2.4
Green Ext Time (p_c), s	0.0	10.0	0.0	0.6	0.0	10.0		0.0

Intersection Summary	
HCM 6th Ctrl Delay	17.4
HCM 6th LOS	B

Notes

* HCM 6th computational engine requires equal clearance times for the phases crossing the barrier.

Intersection	
Int Delay, s/veh	3.6

Movement	EBL	EBT	WBT	WBR	SBL	SBR
Lane Configurations						
Traffic Vol, veh/h	48	125	210	9	20	104
Future Vol, veh/h	48	125	210	9	20	104
Conflicting Peds, #/hr	0	0	0	0	0	0
Sign Control	Free	Free	Free	Free	Stop	Stop
RT Channelized	-	None	-	None	-	None
Storage Length	450	-	-	-	0	-
Veh in Median Storage, #	-	0	0	-	0	-
Grade, %	-	0	0	-	0	-
Peak Hour Factor	82	82	82	82	82	82
Heavy Vehicles, %	8	8	2	2	15	15
Mvmt Flow	59	152	256	11	24	127

Major/Minor	Major1		Major2		Minor2	
Conflicting Flow All	267	0	-	0	532	262
Stage 1	-	-	-	-	262	-
Stage 2	-	-	-	-	270	-
Critical Hdwy	4.18	-	-	-	6.55	6.35
Critical Hdwy Stg 1	-	-	-	-	5.55	-
Critical Hdwy Stg 2	-	-	-	-	5.55	-
Follow-up Hdwy	2.272	-	-	-	3.635	3.435
Pot Cap-1 Maneuver	1263	-	-	-	486	746
Stage 1	-	-	-	-	753	-
Stage 2	-	-	-	-	746	-
Platoon blocked, %		-	-	-		
Mov Cap-1 Maneuver	1263	-	-	-	463	746
Mov Cap-2 Maneuver	-	-	-	-	463	-
Stage 1	-	-	-	-	718	-
Stage 2	-	-	-	-	746	-

Approach	EB	WB	SB
HCM Control Delay, s	2.2	0	11.8
HCM LOS			B

Minor Lane/Major Mvmt	EBL	EBT	WBT	WBR	SBLn1
Capacity (veh/h)	1263	-	-	-	679
HCM Lane V/C Ratio	0.046	-	-	-	0.223
HCM Control Delay (s)	8	-	-	-	11.8
HCM Lane LOS	A	-	-	-	B
HCM 95th %tile Q(veh)	0.1	-	-	-	0.8

Intersection	
Int Delay, s/veh	2.8

Movement	EBL	EBT	EBR	WBL	WBT	WBR	NBL	NBT	NBR	SBL	SBT	SBR
Lane Configurations												
Traffic Vol, veh/h	5	158	95	95	224	5	30	0	10	5	5	10
Future Vol, veh/h	5	158	95	95	224	5	30	0	10	5	5	10
Conflicting Peds, #/hr	0	0	0	0	0	0	0	0	0	0	0	0
Sign Control	Free	Free	Free	Free	Free	Free	Stop	Stop	Stop	Stop	Stop	Stop
RT Channelized	-	-	None	-	-	None	-	-	None	-	-	None
Storage Length	-	-	-	-	-	-	-	-	-	-	-	-
Veh in Median Storage, #	-	0	-	-	0	-	-	0	-	-	0	-
Grade, %	-	0	-	-	0	-	-	0	-	-	0	-
Peak Hour Factor	89	89	89	89	89	89	89	89	89	89	89	89
Heavy Vehicles, %	9	9	9	7	7	7	0	0	0	53	53	53
Mvmt Flow	6	178	107	107	252	6	34	0	11	6	6	11

Major/Minor	Major1			Major2			Minor1			Minor2		
Conflicting Flow All	258	0	0	285	0	0	722	716	143	570	766	255
Stage 1	-	-	-	-	-	-	244	244	-	469	469	-
Stage 2	-	-	-	-	-	-	478	472	-	101	297	-
Critical Hdwy	4.235	-	-	4.205	-	-	7.3	6.5	6.9	8.095	7.295	6.995
Critical Hdwy Stg 1	-	-	-	-	-	-	6.5	5.5	-	6.895	6.295	-
Critical Hdwy Stg 2	-	-	-	-	-	-	6.1	5.5	-	7.295	6.295	-
Follow-up Hdwy	2.2855	-	-	2.2665	-	-	3.5	4	3.3	4.0035	4.5035	3.8035
Pot Cap-1 Maneuver	1261	-	-	1244	-	-	331	358	885	337	263	658
Stage 1	-	-	-	-	-	-	744	708	-	470	465	-
Stage 2	-	-	-	-	-	-	572	562	-	775	569	-
Platoon blocked, %		-	-		-	-						
Mov Cap-1 Maneuver	1261	-	-	1244	-	-	294	320	885	306	235	658
Mov Cap-2 Maneuver	-	-	-	-	-	-	294	320	-	306	235	-
Stage 1	-	-	-	-	-	-	740	704	-	467	419	-
Stage 2	-	-	-	-	-	-	499	506	-	761	566	-

Approach	EB	WB	NB	SB
HCM Control Delay, s	0.2	2.4	16.7	15.1
HCM LOS			C	C

Minor Lane/Major Mvmt	NBLn1	EBL	EBT	EBR	WBL	WBT	WBR	SBLn1
Capacity (veh/h)	353	1261	-	-	1244	-	-	379
HCM Lane V/C Ratio	0.127	0.004	-	-	0.086	-	-	0.059
HCM Control Delay (s)	16.7	7.9	0	-	8.2	0	-	15.1
HCM Lane LOS	C	A	A	-	A	A	-	C
HCM 95th %tile Q(veh)	0.4	0	-	-	0.3	-	-	0.2

Movement	WBL	WBR	NBT	NBR	SBL	SBT
Lane Configurations						
Traffic Volume (veh/h)	110	144	450	72	201	1250
Future Volume (veh/h)	110	144	450	72	201	1250
Initial Q (Qb), veh	0	0	0	0	0	0
Ped-Bike Adj(A_pbT)	1.00	1.00		1.00	1.00	
Parking Bus, Adj	1.00	1.00	1.00	1.00	1.00	1.00
Work Zone On Approach	No		No			No
Adj Sat Flow, veh/h/ln	1781	1781	1826	1826	1885	1885
Adj Flow Rate, veh/h	118	155	484	77	216	1344
Peak Hour Factor	0.93	0.93	0.93	0.93	0.93	0.93
Percent Heavy Veh, %	8	8	5	5	1	1
Cap, veh/h	111	146	997	159	563	1395
Arrive On Green	0.16	0.16	0.65	0.65	0.05	0.74
Sat Flow, veh/h	683	897	1537	245	1795	1885
Grp Volume(v), veh/h	274	0	0	561	216	1344
Grp Sat Flow(s),veh/h/ln	1586	0	0	1782	1795	1885
Q Serve(g_s), s	24.0	0.0	0.0	23.8	5.7	95.4
Cycle Q Clear(g_c), s	24.0	0.0	0.0	23.8	5.7	95.4
Prop In Lane	0.43	0.57		0.14	1.00	
Lane Grp Cap(c), veh/h	258	0	0	1156	563	1395
V/C Ratio(X)	1.06	0.00	0.00	0.49	0.38	0.96
Avail Cap(c_a), veh/h	258	0	0	1161	597	1424
HCM Platoon Ratio	1.00	1.00	1.00	1.00	1.00	1.00
Upstream Filter(I)	1.00	0.00	0.00	1.00	1.00	1.00
Uniform Delay (d), s/veh	61.9	0.0	0.0	13.3	9.8	17.4
Incr Delay (d2), s/veh	74.0	0.0	0.0	0.5	0.6	15.9
Initial Q Delay(d3),s/veh	0.0	0.0	0.0	0.0	0.0	0.0
%ile BackOfQ(50%),veh/ln	15.0	0.0	0.0	9.6	2.2	42.6
Unsig. Movement Delay, s/veh						
LnGrp Delay(d),s/veh	135.9	0.0	0.0	13.8	10.4	33.3
LnGrp LOS	F	A	A	B	B	C
Approach Vol, veh/h	274		561			1560
Approach Delay, s/veh	135.9		13.8			30.1
Approach LOS	F		B			C

Timer - Assigned Phs	1	2				6	8
Phs Duration (G+Y+Rc), s	13.5	104.0				117.5	30.3
Change Period (Y+Rc), s	5.5	* 8.1				* 8.1	6.3
Max Green Setting (Gmax), s	10.8	* 96				* 1.1E2	24.0
Max Q Clear Time (g_c+I1), s	7.7	25.8				97.4	26.0
Green Ext Time (p_c), s	0.3	6.8				12.0	0.0

Intersection Summary	
HCM 6th Ctrl Delay	38.4
HCM 6th LOS	D

Notes

User approved pedestrian interval to be less than phase max green.

User approved volume balancing among the lanes for turning movement.

* HCM 6th computational engine requires equal clearance times for the phases crossing the barrier.

Movement	EBL	EBR	NBL	NBT	SBT	SBR
Lane Configurations						
Traffic Volume (vph)	70	275	90	342	1286	100
Future Volume (vph)	70	275	90	342	1286	100
Ideal Flow (vphpl)	1900	1900	1900	1900	1900	1900
Total Lost time (s)	5.0	5.0	6.5	6.5	6.5	6.5
Lane Util. Factor	1.00	1.00	1.00	1.00	1.00	1.00
Frt	1.00	0.85	1.00	1.00	1.00	0.85
Flt Protected	0.95	1.00	0.95	1.00	1.00	1.00
Satd. Flow (prot)	1752	1568	1787	1881	1881	1599
Flt Permitted	0.95	1.00	0.02	1.00	1.00	1.00
Satd. Flow (perm)	1752	1568	42	1881	1881	1599
Peak-hour factor, PHF	0.94	0.94	0.94	0.94	0.94	0.94
Adj. Flow (vph)	74	293	96	364	1368	106
RTOR Reduction (vph)	0	91	0	0	0	6
Lane Group Flow (vph)	74	202	96	364	1368	100
Heavy Vehicles (%)	3%	3%	1%	1%	1%	1%
Turn Type	custom	custom	pm+pt	NA	NA	Perm
Protected Phases	3	3	5	2	6	
Permitted Phases	4	4	2			6
Actuated Green, G (s)	34.9	34.9	193.6	193.6	171.4	171.4
Effective Green, g (s)	34.9	34.9	193.6	193.6	171.4	171.4
Actuated g/C Ratio	0.15	0.15	0.81	0.81	0.71	0.71
Clearance Time (s)	5.0	5.0	6.5	6.5	6.5	6.5
Vehicle Extension (s)	2.0	2.0	2.0	5.0	5.0	5.0
Lane Grp Cap (vph)	254	228	148	1517	1343	1141
v/s Ratio Prot	0.04	c0.13	c0.04	0.19	c0.73	
v/s Ratio Perm			0.48			0.06
v/c Ratio	0.29	0.88	0.65	0.24	1.02	0.09
Uniform Delay, d1	91.5	100.6	91.5	5.6	34.3	10.5
Progression Factor	1.00	1.00	0.96	1.61	1.00	1.00
Incremental Delay, d2	0.2	30.0	6.9	0.4	29.3	0.2
Delay (s)	91.7	130.5	94.8	9.3	63.6	10.6
Level of Service	F	F	F	A	E	B
Approach Delay (s)	122.7			27.1	59.8	
Approach LOS	F			C	E	

Intersection Summary			
HCM 2000 Control Delay	63.3	HCM 2000 Level of Service	E
HCM 2000 Volume to Capacity ratio	0.98		
Actuated Cycle Length (s)	240.0	Sum of lost time (s)	21.0
Intersection Capacity Utilization	94.3%	ICU Level of Service	F
Analysis Period (min)	15		
c Critical Lane Group			

Movement	EBL	EBR	NBL	NBT	SBT	SBR
Lane Configurations						
Traffic Volume (vph)	127	23	13	305	1315	266
Future Volume (vph)	127	23	13	305	1315	266
Ideal Flow (vphpl)	1900	1900	1900	1900	1900	1900
Total Lost time (s)	5.0	5.0	6.0	6.0	6.0	5.0
Lane Util. Factor	1.00	1.00	1.00	1.00	1.00	1.00
Frt	1.00	0.85	1.00	1.00	1.00	0.85
Flt Protected	0.95	1.00	0.95	1.00	1.00	1.00
Satd. Flow (prot)	1787	1599	1787	1881	1881	1599
Flt Permitted	0.95	1.00	0.04	1.00	1.00	1.00
Satd. Flow (perm)	1787	1599	81	1881	1881	1599
Peak-hour factor, PHF	0.91	0.91	0.91	0.91	0.91	0.91
Adj. Flow (vph)	140	25	14	335	1445	292
RTOR Reduction (vph)	0	22	0	0	0	24
Lane Group Flow (vph)	140	3	14	335	1445	268
Heavy Vehicles (%)	1%	1%	1%	1%	1%	1%
Turn Type	custom	custom	pm+pt	NA	NA	pm+ov
Protected Phases	3	3	5	2	6	3
Permitted Phases	4	4	2			6
Actuated Green, G (s)	13.8	13.8	95.2	95.2	87.2	101.0
Effective Green, g (s)	13.8	13.8	95.2	95.2	87.2	101.0
Actuated g/C Ratio	0.12	0.12	0.79	0.79	0.73	0.84
Clearance Time (s)	5.0	5.0	6.0	6.0	6.0	5.0
Vehicle Extension (s)	2.0	2.0	2.0	2.0	2.0	2.0
Lane Grp Cap (vph)	205	183	92	1492	1366	1345
v/s Ratio Prot	c0.08	0.00	0.00	c0.18	c0.77	0.02
v/s Ratio Perm			0.12			0.14
v/c Ratio	0.68	0.02	0.15	0.22	1.06	0.20
Uniform Delay, d1	51.0	47.1	36.0	3.1	16.4	1.8
Progression Factor	1.00	1.00	1.00	1.00	1.46	1.09
Incremental Delay, d2	7.3	0.0	0.3	0.3	32.9	0.0
Delay (s)	58.3	47.1	36.3	3.5	56.9	2.0
Level of Service	E	D	D	A	E	A
Approach Delay (s)	56.6			4.8	47.7	
Approach LOS	E			A	D	

Intersection Summary			
HCM 2000 Control Delay	41.7	HCM 2000 Level of Service	D
HCM 2000 Volume to Capacity ratio	1.03		
Actuated Cycle Length (s)	120.0	Sum of lost time (s)	20.0
Intersection Capacity Utilization	85.4%	ICU Level of Service	E
Analysis Period (min)	15		
c Critical Lane Group			

Intersection	
Int Delay, s/veh	21

Movement	EBL	EBT	EBR	WBL	WBT	WBR	NBL	NBT	NBR	SBL	SBT	SBR
Lane Configurations												
Traffic Vol, veh/h	0	0	0	210	0	20	20	288	0	0	550	733
Future Vol, veh/h	0	0	0	210	0	20	20	288	0	0	550	733
Conflicting Peds, #/hr	0	0	0	0	0	0	0	0	0	0	0	0
Sign Control	Stop	Stop	Stop	Stop	Stop	Stop	Free	Free	Free	Free	Free	Free
RT Channelized	-	-	None	-	-	None	-	-	None	-	-	None
Storage Length	-	-	-	-	-	500	175	-	-	-	-	375
Veh in Median Storage, #	-	1	-	-	0	-	-	0	-	-	0	-
Grade, %	-	0	-	-	0	-	-	0	-	-	0	-
Peak Hour Factor	98	98	98	98	98	98	98	98	98	98	98	98
Heavy Vehicles, %	0	0	0	1	1	1	1	1	1	1	1	1
Mvmt Flow	0	0	0	214	0	20	20	294	0	0	561	748

Major/Minor	Minor1		Major1			Major2			
Conflicting Flow All	1269	1643	294	1309	0	-	-	-	0
Stage 1	334	334	-	-	-	-	-	-	-
Stage 2	935	1309	-	-	-	-	-	-	-
Critical Hdwy	6.41	6.51	6.21	4.11	-	-	-	-	-
Critical Hdwy Stg 1	5.41	5.51	-	-	-	-	-	-	-
Critical Hdwy Stg 2	5.41	5.51	-	-	-	-	-	-	-
Follow-up Hdwy	3.509	4.009	3.309	2.209	-	-	-	-	-
Pot Cap-1 Maneuver	~ 187	100	748	532	-	0	0	-	-
Stage 1	728	645	-	-	-	0	0	-	-
Stage 2	384	230	-	-	-	0	0	-	-
Platoon blocked, %					-			-	-
Mov Cap-1 Maneuver	~ 180	0	748	532	-	-	-	-	-
Mov Cap-2 Maneuver	~ 180	0	-	-	-	-	-	-	-
Stage 1	700	0	-	-	-	-	-	-	-
Stage 2	384	0	-	-	-	-	-	-	-

Approach	WB	NB	SB
HCM Control Delay, s	165.1	0.8	0
HCM LOS	F		

Minor Lane/Major Mvmt	NBL	NBT	WBLn1	WBLn2	SBT	SBR
Capacity (veh/h)	532	-	180	748	-	-
HCM Lane V/C Ratio	0.038	-	1.19	0.027	-	-
HCM Control Delay (s)	12	-	179.9	9.9	-	-
HCM Lane LOS	B	-	F	A	-	-
HCM 95th %tile Q(veh)	0.1	-	11.4	0.1	-	-

Notes

~: Volume exceeds capacity $: Delay exceeds 300s +: Computation Not Defined *: All major volume in platoon

Movement	EBL	EBR	NBL	NBT	SBT	SBR
Lane Configurations						
Traffic Volume (veh/h)	168	30	35	140	730	30
Future Volume (veh/h)	168	30	35	140	730	30
Initial Q (Qb), veh	0	0	0	0	0	0
Ped-Bike Adj(A_pbT)	1.00	1.00	1.00			1.00
Parking Bus, Adj	1.00	1.00	1.00	1.00	1.00	1.00
Work Zone On Approach	No			No	No	
Adj Sat Flow, veh/h/ln	1885	1885	1885	1885	1900	1900
Adj Flow Rate, veh/h	175	31	36	146	760	31
Peak Hour Factor	0.96	0.96	0.96	0.96	0.96	0.96
Percent Heavy Veh, %	1	1	1	1	0	0
Cap, veh/h	248	221	175	650	1078	44
Arrive On Green	0.14	0.14	0.59	0.59	0.59	0.59
Sat Flow, veh/h	1795	1598	141	1093	1813	74
Grp Volume(v), veh/h	175	31	182	0	0	791
Grp Sat Flow(s),veh/h/ln	1795	1598	1234	0	0	1887
Q Serve(g_s), s	4.4	0.8	0.9	0.0	0.0	13.8
Cycle Q Clear(g_c), s	4.4	0.8	14.7	0.0	0.0	13.8
Prop In Lane	1.00	1.00	0.20			0.04
Lane Grp Cap(c), veh/h	248	221	825	0	0	1122
V/C Ratio(X)	0.70	0.14	0.22	0.00	0.00	0.71
Avail Cap(c_a), veh/h	1282	1141	825	0	0	1747
HCM Platoon Ratio	1.00	1.00	1.00	1.00	1.00	1.00
Upstream Filter(I)	1.00	1.00	1.00	0.00	0.00	1.00
Uniform Delay (d), s/veh	19.4	17.9	4.7	0.0	0.0	6.7
Incr Delay (d2), s/veh	3.6	0.3	0.3	0.0	0.0	1.8
Initial Q Delay(d3),s/veh	0.0	0.0	0.0	0.0	0.0	0.0
%ile BackOfQ(50%),veh/ln	1.9	0.3	0.6	0.0	0.0	3.9
Unsig. Movement Delay, s/veh						
LnGrp Delay(d),s/veh	23.0	18.2	5.0	0.0	0.0	8.4
LnGrp LOS	C	B	A	A	A	A
Approach Vol, veh/h	206			182	791	
Approach Delay, s/veh	22.3			5.0	8.4	
Approach LOS	C			A	A	

Timer - Assigned Phs		2		4		6
Phs Duration (G+Y+Rc), s		34.4		12.8		34.4
Change Period (Y+Rc), s		6.3		6.3		6.3
Max Green Setting (Gmax), s		23.7		33.7		43.7
Max Q Clear Time (g_c+I1), s		16.7		6.4		15.8
Green Ext Time (p_c), s		0.9		0.6		12.3

Intersection Summary	
HCM 6th Ctrl Delay	10.3
HCM 6th LOS	B

Movement	EBL	EBT	EBR	WBL	WBT	WBR	NBL	NBT	NBR	SBL	SBT	SBR
Lane Configurations												
Traffic Volume (veh/h)	95	5	15	10	5	5	45	564	5	5	1391	385
Future Volume (veh/h)	95	5	15	10	5	5	45	564	5	5	1391	385
Initial Q (Qb), veh	0	0	0	0	0	0	0	0	0	0	0	0
Ped-Bike Adj(A_pbT)	1.00		1.00	1.00		1.00	1.00		1.00	1.00		1.00
Parking Bus, Adj	1.00	1.00	1.00	1.00	1.00	1.00	1.00	1.00	1.00	1.00	1.00	1.00
Work Zone On Approach		No			No			No			No	
Adj Sat Flow, veh/h/ln	1885	1885	1885	1900	1900	1900	1826	1826	1826	1856	1856	1856
Adj Flow Rate, veh/h	101	5	16	11	5	5	48	600	5	5	1480	410
Peak Hour Factor	0.94	0.94	0.94	0.94	0.94	0.94	0.94	0.94	0.94	0.94	0.94	0.94
Percent Heavy Veh, %	1	1	1	0	0	0	5	5	5	3	3	3
Cap, veh/h	151	5	17	222	116	116	82	1316	11	536	1324	1122
Arrive On Green	0.09	0.09	0.09	0.01	0.13	0.13	0.02	0.73	0.73	0.00	0.71	0.71
Sat Flow, veh/h	1202	60	190	1810	872	872	1739	1808	15	1767	1856	1572
Grp Volume(v), veh/h	122	0	0	11	0	10	48	0	605	5	1480	410
Grp Sat Flow(s),veh/h/ln	1452	0	0	1810	0	1743	1739	0	1823	1767	1856	1572
Q Serve(g_s), s	12.1	0.0	0.0	0.8	0.0	0.7	1.1	0.0	19.5	0.1	102.9	14.6
Cycle Q Clear(g_c), s	12.1	0.0	0.0	0.8	0.0	0.7	1.1	0.0	19.5	0.1	102.9	14.6
Prop In Lane	0.83		0.13	1.00		0.50	1.00		0.01	1.00		1.00
Lane Grp Cap(c), veh/h	173	0	0	222	0	232	82	0	1327	536	1324	1122
V/C Ratio(X)	0.71	0.00	0.00	0.05	0.00	0.04	0.59	0.00	0.46	0.01	1.12	0.37
Avail Cap(c_a), veh/h	173	0	0	278	0	297	98	0	1327	578	1324	1122
HCM Platoon Ratio	1.00	1.00	1.00	1.00	1.00	1.00	1.00	1.00	1.00	1.00	1.00	1.00
Upstream Filter(I)	1.00	0.00	0.00	1.00	0.00	1.00	1.00	0.00	1.00	1.00	1.00	1.00
Uniform Delay (d), s/veh	65.6	0.0	0.0	57.6	0.0	54.5	42.0	0.0	8.0	6.8	20.7	8.0
Incr Delay (d2), s/veh	13.6	0.0	0.0	0.1	0.0	0.1	6.5	0.0	0.5	0.0	63.8	0.4
Initial Q Delay(d3),s/veh	0.0	0.0	0.0	0.0	0.0	0.0	0.0	0.0	0.0	0.0	0.0	0.0
%ile BackOfQ(50%),veh/ln	5.1	0.0	0.0	0.4	0.0	0.3	1.4	0.0	7.5	0.0	63.2	4.9
Unsig. Movement Delay, s/veh												
LnGrp Delay(d),s/veh	79.2	0.0	0.0	57.7	0.0	54.6	48.5	0.0	8.5	6.8	84.4	8.4
LnGrp LOS	E	A	A	E	A	D	D	A	A	A	F	A
Approach Vol, veh/h		122			21			653			1895	
Approach Delay, s/veh		79.2			56.3			11.4			67.8	
Approach LOS		E			E			B			E	

Timer - Assigned Phs	1	2	3	4	5	6		8
Phs Duration (G+Y+Rc), s	6.0	112.1	6.6	19.5	8.1	110.0		26.1
Change Period (Y+Rc), s	5.5	7.1	5.5	6.9	5.5	7.1		* 6.9
Max Green Setting (Gmax), s	4.0	102.9	5.5	12.6	4.0	102.9		* 25
Max Q Clear Time (g_c+I1), s	2.1	21.5	2.8	14.1	3.1	104.9		2.7
Green Ext Time (p_c), s	0.0	10.7	0.0	0.0	0.0	0.0		0.0

Intersection Summary	
HCM 6th Ctrl Delay	54.5
HCM 6th LOS	D

Notes

* HCM 6th computational engine requires equal clearance times for the phases crossing the barrier.

5 Day Schedule

Movement	WBL	WBR	NBT	NBR	SBL	SBT
Lane Configurations						
Traffic Volume (veh/h)	32	154	950	191	58	320
Future Volume (veh/h)	32	154	950	191	58	320
Initial Q (Qb), veh	0	0	0	0	0	0
Ped-Bike Adj(A_pbT)	1.00	1.00		1.00	1.00	
Parking Bus, Adj	1.00	1.00	1.00	1.00	1.00	1.00
Work Zone On Approach	No		No			No
Adj Sat Flow, veh/h/ln	1618	1618	1856	1856	1826	1826
Adj Flow Rate, veh/h	34	166	1022	205	62	344
Peak Hour Factor	0.93	0.93	0.93	0.93	0.93	0.93
Percent Heavy Veh, %	19	19	3	3	5	5
Cap, veh/h	37	182	998	200	110	1348
Arrive On Green	0.16	0.16	0.67	0.67	0.03	0.74
Sat Flow, veh/h	237	1155	1500	301	1739	1826
Grp Volume(v), veh/h	201	0	0	1227	62	344
Grp Sat Flow(s),veh/h/ln	1399	0	0	1801	1739	1826
Q Serve(g_s), s	19.5	0.0	0.0	91.5	1.5	8.4
Cycle Q Clear(g_c), s	19.5	0.0	0.0	91.5	1.5	8.4
Prop In Lane	0.17	0.83		0.17	1.00	
Lane Grp Cap(c), veh/h	220	0	0	1198	110	1348
V/C Ratio(X)	0.91	0.00	0.00	1.02	0.57	0.26
Avail Cap(c_a), veh/h	247	0	0	1198	119	1348
HCM Platoon Ratio	1.00	1.00	1.00	1.00	1.00	1.00
Upstream Filter(I)	1.00	0.00	0.00	1.00	1.00	1.00
Uniform Delay (d), s/veh	57.1	0.0	0.0	23.0	37.7	5.8
Incr Delay (d2), s/veh	33.2	0.0	0.0	32.2	6.9	0.1
Initial Q Delay(d3),s/veh	0.0	0.0	0.0	0.0	0.0	0.0
%ile BackOfQ(50%),veh/ln	8.9	0.0	0.0	46.2	1.6	3.1
Unsig. Movement Delay, s/veh						
LnGrp Delay(d),s/veh	90.3	0.0	0.0	55.3	44.6	6.0
LnGrp LOS	F	A	A	F	D	A
Approach Vol, veh/h	201		1227			406
Approach Delay, s/veh	90.3		55.3			11.8
Approach LOS	F		E			B

Timer - Assigned Phs	1	2				6	8
Phs Duration (G+Y+Rc), s	10.0	99.6				109.6	27.9
Change Period (Y+Rc), s	5.5	* 8.1				* 8.1	6.3
Max Green Setting (Gmax), s	5.3	* 92				* 1E2	24.3
Max Q Clear Time (g_c+I1), s	3.5	93.5				10.4	21.5
Green Ext Time (p_c), s	0.0	0.0				3.5	0.2

Intersection Summary	
HCM 6th Ctrl Delay	49.5
HCM 6th LOS	D

Notes

User approved pedestrian interval to be less than phase max green.

User approved volume balancing among the lanes for turning movement.

* HCM 6th computational engine requires equal clearance times for the phases crossing the barrier.

5 Day Schedule

Movement	WBL	WBR	NBT	NBR	SBL	SBT
Lane Configurations						
Traffic Volume (veh/h)	77	138	430	102	121	440
Future Volume (veh/h)	77	138	430	102	121	440
Initial Q (Qb), veh	0	0	0	0	0	0
Ped-Bike Adj(A_pbT)	1.00	1.00		1.00	1.00	
Parking Bus, Adj	1.00	1.00	1.00	1.00	1.00	1.00
Work Zone On Approach	No		No			No
Adj Sat Flow, veh/h/ln	1233	1233	1796	1796	1678	1678
Adj Flow Rate, veh/h	84	150	467	111	132	478
Peak Hour Factor	0.92	0.92	0.92	0.92	0.92	0.92
Percent Heavy Veh, %	45	45	7	7	15	15
Cap, veh/h	95	169	527	125	274	893
Arrive On Green	0.24	0.24	0.38	0.38	0.07	0.53
Sat Flow, veh/h	389	695	1403	333	1598	1678
Grp Volume(v), veh/h	235	0	0	578	132	478
Grp Sat Flow(s),veh/h/ln	1089	0	0	1736	1598	1678
Q Serve(g_s), s	13.4	0.0	0.0	20.0	3.0	12.0
Cycle Q Clear(g_c), s	13.4	0.0	0.0	20.0	3.0	12.0
Prop In Lane	0.36	0.64		0.19	1.00	
Lane Grp Cap(c), veh/h	265	0	0	653	274	893
V/C Ratio(X)	0.89	0.00	0.00	0.89	0.48	0.54
Avail Cap(c_a), veh/h	402	0	0	730	287	964
HCM Platoon Ratio	1.00	1.00	1.00	1.00	1.00	1.00
Upstream Filter(I)	1.00	0.00	0.00	1.00	1.00	1.00
Uniform Delay (d), s/veh	23.4	0.0	0.0	18.7	14.1	9.8
Incr Delay (d2), s/veh	14.5	0.0	0.0	12.3	1.9	0.7
Initial Q Delay(d3),s/veh	0.0	0.0	0.0	0.0	0.0	0.0
%ile BackOfQ(50%),veh/ln	4.2	0.0	0.0	9.4	1.1	3.8
Unsig. Movement Delay, s/veh						
LnGrp Delay(d),s/veh	37.9	0.0	0.0	31.0	16.0	10.5
LnGrp LOS	D	A	A	C	B	B
Approach Vol, veh/h	235		578			610
Approach Delay, s/veh	37.9		31.0			11.7
Approach LOS	D		C			B

Timer - Assigned Phs	1	2				6	8
Phs Duration (G+Y+Rc), s	10.0	32.2				42.3	21.9
Change Period (Y+Rc), s	5.5	* 8.1				* 8.1	6.3
Max Green Setting (Gmax), s	5.1	* 27				* 37	23.7
Max Q Clear Time (g_c+I1), s	5.0	22.0				14.0	15.4
Green Ext Time (p_c), s	0.0	2.1				4.5	0.5

Intersection Summary	
HCM 6th Ctrl Delay	23.9
HCM 6th LOS	C

Notes

User approved pedestrian interval to be less than phase max green.

User approved volume balancing among the lanes for turning movement.

* HCM 6th computational engine requires equal clearance times for the phases crossing the barrier.

Movement	WBL	WBR	NBT	NBR	SBL	SBT
Lane Configurations						
Traffic Volume (veh/h)	108	103	425	66	146	1185
Future Volume (veh/h)	108	103	425	66	146	1185
Initial Q (Qb), veh	0	0	0	0	0	0
Ped-Bike Adj(A_pbT)	1.00	1.00		1.00	1.00	
Parking Bus, Adj	1.00	1.00	1.00	1.00	1.00	1.00
Work Zone On Approach	No		No			No
Adj Sat Flow, veh/h/ln	1781	1781	1826	1826	1885	1885
Adj Flow Rate, veh/h	116	111	457	71	157	1274
Peak Hour Factor	0.93	0.93	0.93	0.93	0.93	0.93
Percent Heavy Veh, %	8	8	5	5	1	1
Cap, veh/h	143	137	1020	158	605	1430
Arrive On Green	0.18	0.16	0.66	0.64	0.06	0.76
Sat Flow, veh/h	814	779	1543	240	1795	1885
Grp Volume(v), veh/h	228	0	0	528	157	1274
Grp Sat Flow(s),veh/h/ln	1600	0	0	1783	1795	1885
Q Serve(g_s), s	16.6	0.0	0.0	17.4	3.2	61.0
Cycle Q Clear(g_c), s	16.6	0.0	0.0	17.4	3.2	61.0
Prop In Lane	0.51	0.49		0.13	1.00	
Lane Grp Cap(c), veh/h	281	0	0	1179	605	1430
V/C Ratio(X)	0.81	0.00	0.00	0.45	0.26	0.89
Avail Cap(c_a), veh/h	347	0	0	1372	629	1644
HCM Platoon Ratio	1.00	1.00	1.00	1.00	1.00	1.00
Upstream Filter(I)	1.00	0.00	0.00	1.00	1.00	1.00
Uniform Delay (d), s/veh	48.6	0.0	0.0	10.0	7.1	10.9
Incr Delay (d2), s/veh	11.3	0.0	0.0	0.4	0.3	6.3
Initial Q Delay(d3),s/veh	0.0	0.0	0.0	0.0	0.0	0.0
%ile BackOfQ(50%),veh/ln	7.6	0.0	0.0	6.6	1.2	23.1
Unsig. Movement Delay, s/veh						
LnGrp Delay(d),s/veh	59.9	0.0	0.0	10.4	7.4	17.2
LnGrp LOS	E	A	A	B	A	B
Approach Vol, veh/h	228		528			1431
Approach Delay, s/veh	59.9		10.4			16.1
Approach LOS	E		B			B

Timer - Assigned Phs	1	2				6	8
Phs Duration (G+Y+Rc), s	10.8	85.2				96.0	25.3
Change Period (Y+Rc), s	5.5	* 8.1				* 8.1	6.3
Max Green Setting (Gmax), s	6.9	* 90				* 1E2	24.0
Max Q Clear Time (g_c+I1), s	5.2	19.4				63.0	18.6
Green Ext Time (p_c), s	0.1	6.2				24.9	0.3

Intersection Summary	
HCM 6th Ctrl Delay	19.3
HCM 6th LOS	B

Notes

User approved pedestrian interval to be less than phase max green.

User approved volume balancing among the lanes for turning movement.

* HCM 6th computational engine requires equal clearance times for the phases crossing the barrier.

5 Day Schedule

Movement	WBL	WBR	NBT	NBR	SBL	SBT
Lane Configurations						
Traffic Volume (veh/h)	33	155	950	192	60	320
Future Volume (veh/h)	33	155	950	192	60	320
Initial Q (Qb), veh	0	0	0	0	0	0
Ped-Bike Adj(A_pbT)	1.00	1.00		1.00	1.00	
Parking Bus, Adj	1.00	1.00	1.00	1.00	1.00	1.00
Work Zone On Approach	No		No			No
Adj Sat Flow, veh/h/ln	1618	1618	1856	1856	1826	1826
Adj Flow Rate, veh/h	35	167	1022	206	65	344
Peak Hour Factor	0.93	0.93	0.93	0.93	0.93	0.93
Percent Heavy Veh, %	19	19	3	3	5	5
Cap, veh/h	38	182	995	201	110	1346
Arrive On Green	0.16	0.16	0.66	0.66	0.03	0.74
Sat Flow, veh/h	241	1151	1499	302	1739	1826
Grp Volume(v), veh/h	203	0	0	1228	65	344
Grp Sat Flow(s),veh/h/ln	1399	0	0	1801	1739	1826
Q Serve(g_s), s	19.7	0.0	0.0	91.5	1.5	8.4
Cycle Q Clear(g_c), s	19.7	0.0	0.0	91.5	1.5	8.4
Prop In Lane	0.17	0.82		0.17	1.00	
Lane Grp Cap(c), veh/h	222	0	0	1196	110	1346
V/C Ratio(X)	0.92	0.00	0.00	1.03	0.59	0.26
Avail Cap(c_a), veh/h	247	0	0	1196	119	1346
HCM Platoon Ratio	1.00	1.00	1.00	1.00	1.00	1.00
Upstream Filter(I)	1.00	0.00	0.00	1.00	1.00	1.00
Uniform Delay (d), s/veh	57.1	0.0	0.0	23.2	37.7	5.9
Incr Delay (d2), s/veh	33.7	0.0	0.0	33.1	8.4	0.1
Initial Q Delay(d3),s/veh	0.0	0.0	0.0	0.0	0.0	0.0
%ile BackOfQ(50%),veh/ln	9.0	0.0	0.0	46.6	1.8	3.1
Unsig. Movement Delay, s/veh						
LnGrp Delay(d),s/veh	90.8	0.0	0.0	56.3	46.0	6.0
LnGrp LOS	F	A	A	F	D	A
Approach Vol, veh/h	203		1228			409
Approach Delay, s/veh	90.8		56.3			12.4
Approach LOS	F		E			B

Timer - Assigned Phs	1	2				6	8
Phs Duration (G+Y+Rc), s	10.1	99.6				109.7	28.1
Change Period (Y+Rc), s	5.5	* 8.1				* 8.1	6.3
Max Green Setting (Gmax), s	5.3	* 92				* 1E2	24.3
Max Q Clear Time (g_c+I1), s	3.5	93.5				10.4	21.7
Green Ext Time (p_c), s	0.0	0.0				3.5	0.2

Intersection Summary	
HCM 6th Ctrl Delay	50.3
HCM 6th LOS	D

Notes

User approved pedestrian interval to be less than phase max green.

User approved volume balancing among the lanes for turning movement.

* HCM 6th computational engine requires equal clearance times for the phases crossing the barrier.

5 Day Schedule

Movement	WBL	WBR	NBT	NBR	SBL	SBT
Lane Configurations						
Traffic Volume (veh/h)	78	139	430	103	123	440
Future Volume (veh/h)	78	139	430	103	123	440
Initial Q (Qb), veh	0	0	0	0	0	0
Ped-Bike Adj(A_pbT)	1.00	1.00		1.00	1.00	
Parking Bus, Adj	1.00	1.00	1.00	1.00	1.00	1.00
Work Zone On Approach	No		No			No
Adj Sat Flow, veh/h/ln	1233	1233	1796	1796	1678	1678
Adj Flow Rate, veh/h	85	151	467	112	134	478
Peak Hour Factor	0.92	0.92	0.92	0.92	0.92	0.92
Percent Heavy Veh, %	45	45	7	7	15	15
Cap, veh/h	96	170	526	126	273	893
Arrive On Green	0.25	0.25	0.38	0.38	0.07	0.53
Sat Flow, veh/h	390	694	1400	336	1598	1678
Grp Volume(v), veh/h	237	0	0	579	134	478
Grp Sat Flow(s),veh/h/ln	1089	0	0	1736	1598	1678
Q Serve(g_s), s	13.6	0.0	0.0	20.2	3.1	12.1
Cycle Q Clear(g_c), s	13.6	0.0	0.0	20.2	3.1	12.1
Prop In Lane	0.36	0.64		0.19	1.00	
Lane Grp Cap(c), veh/h	267	0	0	652	273	893
V/C Ratio(X)	0.89	0.00	0.00	0.89	0.49	0.54
Avail Cap(c_a), veh/h	399	0	0	725	285	957
HCM Platoon Ratio	1.00	1.00	1.00	1.00	1.00	1.00
Upstream Filter(I)	1.00	0.00	0.00	1.00	1.00	1.00
Uniform Delay (d), s/veh	23.6	0.0	0.0	18.9	14.2	9.9
Incr Delay (d2), s/veh	15.0	0.0	0.0	12.6	1.9	0.7
Initial Q Delay(d3),s/veh	0.0	0.0	0.0	0.0	0.0	0.0
%ile BackOfQ(50%),veh/ln	4.4	0.0	0.0	9.5	1.1	3.9
Unsig. Movement Delay, s/veh						
LnGrp Delay(d),s/veh	38.5	0.0	0.0	31.6	16.2	10.6
LnGrp LOS	D	A	A	C	B	B
Approach Vol, veh/h	237		579			612
Approach Delay, s/veh	38.5		31.6			11.8
Approach LOS	D		C			B

Timer - Assigned Phs	1	2				6	8
Phs Duration (G+Y+Rc), s	10.1	32.4				42.5	22.2
Change Period (Y+Rc), s	5.5	* 8.1				* 8.1	6.3
Max Green Setting (Gmax), s	5.1	* 27				* 37	23.7
Max Q Clear Time (g_c+I1), s	5.1	22.2				14.1	15.6
Green Ext Time (p_c), s	0.0	2.1				4.5	0.5

Intersection Summary	
HCM 6th Ctrl Delay	24.3
HCM 6th LOS	C

Notes

User approved pedestrian interval to be less than phase max green.

User approved volume balancing among the lanes for turning movement.

* HCM 6th computational engine requires equal clearance times for the phases crossing the barrier.

Movement	WBL	WBR	NBT	NBR	SBL	SBT
Lane Configurations						
Traffic Volume (veh/h)	108	103	425	66	146	1185
Future Volume (veh/h)	108	103	425	66	146	1185
Initial Q (Qb), veh	0	0	0	0	0	0
Ped-Bike Adj(A_pbT)	1.00	1.00		1.00	1.00	
Parking Bus, Adj	1.00	1.00	1.00	1.00	1.00	1.00
Work Zone On Approach	No		No			No
Adj Sat Flow, veh/h/ln	1781	1781	1826	1826	1885	1885
Adj Flow Rate, veh/h	116	111	457	71	157	1274
Peak Hour Factor	0.93	0.93	0.93	0.93	0.93	0.93
Percent Heavy Veh, %	8	8	5	5	1	1
Cap, veh/h	143	137	1020	158	605	1430
Arrive On Green	0.18	0.16	0.66	0.64	0.06	0.76
Sat Flow, veh/h	814	779	1543	240	1795	1885
Grp Volume(v), veh/h	228	0	0	528	157	1274
Grp Sat Flow(s),veh/h/ln	1600	0	0	1783	1795	1885
Q Serve(g_s), s	16.6	0.0	0.0	17.4	3.2	61.0
Cycle Q Clear(g_c), s	16.6	0.0	0.0	17.4	3.2	61.0
Prop In Lane	0.51	0.49		0.13	1.00	
Lane Grp Cap(c), veh/h	281	0	0	1179	605	1430
V/C Ratio(X)	0.81	0.00	0.00	0.45	0.26	0.89
Avail Cap(c_a), veh/h	347	0	0	1372	629	1644
HCM Platoon Ratio	1.00	1.00	1.00	1.00	1.00	1.00
Upstream Filter(I)	1.00	0.00	0.00	1.00	1.00	1.00
Uniform Delay (d), s/veh	48.6	0.0	0.0	10.0	7.1	10.9
Incr Delay (d2), s/veh	11.3	0.0	0.0	0.4	0.3	6.3
Initial Q Delay(d3),s/veh	0.0	0.0	0.0	0.0	0.0	0.0
%ile BackOfQ(50%),veh/ln	7.6	0.0	0.0	6.6	1.2	23.1
Unsig. Movement Delay, s/veh						
LnGrp Delay(d),s/veh	59.9	0.0	0.0	10.4	7.4	17.2
LnGrp LOS	E	A	A	B	A	B
Approach Vol, veh/h	228		528			1431
Approach Delay, s/veh	59.9		10.4			16.1
Approach LOS	E		B			B

Timer - Assigned Phs	1	2				6	8
Phs Duration (G+Y+Rc), s	10.8	85.2				96.0	25.3
Change Period (Y+Rc), s	5.5	* 8.1				* 8.1	6.3
Max Green Setting (Gmax), s	6.9	* 90				* 1E2	24.0
Max Q Clear Time (g_c+I1), s	5.2	19.4				63.0	18.6
Green Ext Time (p_c), s	0.1	6.2				24.9	0.3

Intersection Summary	
HCM 6th Ctrl Delay	19.3
HCM 6th LOS	B

Notes

User approved pedestrian interval to be less than phase max green.

User approved volume balancing among the lanes for turning movement.

* HCM 6th computational engine requires equal clearance times for the phases crossing the barrier.

5 Day Schedule

Movement	WBL	WBR	NBT	NBR	SBL	SBT
Lane Configurations						
Traffic Volume (veh/h)	24	149	970	180	50	325
Future Volume (veh/h)	24	149	970	180	50	325
Initial Q (Qb), veh	0	0	0	0	0	0
Ped-Bike Adj(A_pbT)	1.00	1.00		1.00	1.00	
Parking Bus, Adj	1.00	1.00	1.00	1.00	1.00	1.00
Work Zone On Approach	No		No			No
Adj Sat Flow, veh/h/ln	1618	1618	1856	1856	1826	1826
Adj Flow Rate, veh/h	26	160	1043	194	54	349
Peak Hour Factor	0.93	0.93	0.93	0.93	0.93	0.93
Percent Heavy Veh, %	19	19	3	3	5	5
Cap, veh/h	28	175	1047	195	105	1380
Arrive On Green	0.15	0.15	0.69	0.69	0.03	0.76
Sat Flow, veh/h	194	1193	1522	283	1739	1826
Grp Volume(v), veh/h	187	0	0	1237	54	349
Grp Sat Flow(s),veh/h/ln	1394	0	0	1805	1739	1826
Q Serve(g_s), s	19.5	0.0	0.0	100.2	1.3	8.5
Cycle Q Clear(g_c), s	19.5	0.0	0.0	100.2	1.3	8.5
Prop In Lane	0.14	0.86		0.16	1.00	
Lane Grp Cap(c), veh/h	205	0	0	1242	105	1380
V/C Ratio(X)	0.91	0.00	0.00	1.00	0.51	0.25
Avail Cap(c_a), veh/h	230	0	0	1242	115	1380
HCM Platoon Ratio	1.00	1.00	1.00	1.00	1.00	1.00
Upstream Filter(I)	1.00	0.00	0.00	1.00	1.00	1.00
Uniform Delay (d), s/veh	62.0	0.0	0.0	22.8	41.7	5.4
Incr Delay (d2), s/veh	34.9	0.0	0.0	24.6	5.4	0.1
Initial Q Delay(d3),s/veh	0.0	0.0	0.0	0.0	0.0	0.0
%ile BackOfQ(50%),veh/ln	8.9	0.0	0.0	47.3	1.6	3.1
Unsig. Movement Delay, s/veh						
LnGrp Delay(d),s/veh	96.9	0.0	0.0	47.3	47.2	5.6
LnGrp LOS	F	A	A	D	D	A
Approach Vol, veh/h	187		1237			403
Approach Delay, s/veh	96.9		47.3			11.2
Approach LOS	F		D			B

Timer - Assigned Phs	1	2				6	8
Phs Duration (G+Y+Rc), s	10.0	109.6				119.6	27.9
Change Period (Y+Rc), s	5.5	* 8.1				* 8.1	6.3
Max Green Setting (Gmax), s	5.3	* 1E2				* 1.1E2	24.3
Max Q Clear Time (g_c+I1), s	3.3	102.2				10.5	21.5
Green Ext Time (p_c), s	0.0	0.0				3.6	0.2

Intersection Summary	
HCM 6th Ctrl Delay	44.4
HCM 6th LOS	D

Notes

User approved pedestrian interval to be less than phase max green.

User approved volume balancing among the lanes for turning movement.

* HCM 6th computational engine requires equal clearance times for the phases crossing the barrier.

Movement	WBL	WBR	NBT	NBR	SBL	SBT
Lane Configurations						
Traffic Volume (veh/h)	69	128	440	92	107	450
Future Volume (veh/h)	69	128	440	92	107	450
Initial Q (Qb), veh	0	0	0	0	0	0
Ped-Bike Adj(A_pbT)	1.00	1.00		1.00	1.00	
Parking Bus, Adj	1.00	1.00	1.00	1.00	1.00	1.00
Work Zone On Approach	No		No			No
Adj Sat Flow, veh/h/ln	1233	1233	1796	1796	1678	1678
Adj Flow Rate, veh/h	75	139	478	100	116	489
Peak Hour Factor	0.92	0.92	0.92	0.92	0.92	0.92
Percent Heavy Veh, %	45	45	7	7	15	15
Cap, veh/h	98	182	612	128	360	1017
Arrive On Green	0.26	0.22	0.43	0.37	0.10	0.61
Sat Flow, veh/h	379	703	1441	301	1598	1678
Grp Volume(v), veh/h	215	0	0	578	116	489
Grp Sat Flow(s),veh/h/ln	1088	0	0	1742	1598	1678
Q Serve(g_s), s	10.9	0.0	0.0	17.0	2.2	9.6
Cycle Q Clear(g_c), s	10.9	0.0	0.0	17.0	2.2	9.6
Prop In Lane	0.35	0.65		0.17	1.00	
Lane Grp Cap(c), veh/h	282	0	0	740	360	1017
V/C Ratio(X)	0.76	0.00	0.00	0.78	0.32	0.48
Avail Cap(c_a), veh/h	476	0	0	883	382	1159
HCM Platoon Ratio	1.00	1.00	1.00	1.00	1.00	1.00
Upstream Filter(I)	1.00	0.00	0.00	1.00	1.00	1.00
Uniform Delay (d), s/veh	21.0	0.0	0.0	14.9	10.7	6.5
Incr Delay (d2), s/veh	4.3	0.0	0.0	4.3	0.7	0.5
Initial Q Delay(d3),s/veh	0.0	0.0	0.0	0.0	0.0	0.0
%ile BackOfQ(50%),veh/ln	2.9	0.0	0.0	6.7	0.7	2.6
Unsig. Movement Delay, s/veh						
LnGrp Delay(d),s/veh	25.3	0.0	0.0	19.3	11.4	7.0
LnGrp LOS	C	A	A	B	B	A
Approach Vol, veh/h	215		578			605
Approach Delay, s/veh	25.3		19.3			7.9
Approach LOS	C		B			A

Timer - Assigned Phs	1	2			6	8
Phs Duration (G+Y+Rc), s	9.8	30.2			40.0	19.4
Change Period (Y+Rc), s	5.5	* 8.1			* 8.1	6.3
Max Green Setting (Gmax), s	5.1	* 27			* 37	23.7
Max Q Clear Time (g_c+I1), s	4.2	19.0			11.6	12.9
Green Ext Time (p_c), s	0.0	3.1			4.8	0.5

Intersection Summary	
HCM 6th Ctrl Delay	15.3
HCM 6th LOS	B

Notes

User approved pedestrian interval to be less than phase max green.

User approved volume balancing among the lanes for turning movement.

* HCM 6th computational engine requires equal clearance times for the phases crossing the barrier.

Movement	WBL	WBR	NBT	NBR	SBL	SBT
Lane Configurations						
Traffic Volume (veh/h)	92	116	450	63	178	1250
Future Volume (veh/h)	92	116	450	63	178	1250
Initial Q (Qb), veh	0	0	0	0	0	0
Ped-Bike Adj(A_pbT)	1.00	1.00		1.00	1.00	
Parking Bus, Adj	1.00	1.00	1.00	1.00	1.00	1.00
Work Zone On Approach	No		No			No
Adj Sat Flow, veh/h/ln	1781	1781	1826	1826	1885	1885
Adj Flow Rate, veh/h	99	125	484	68	191	1344
Peak Hour Factor	0.93	0.93	0.93	0.93	0.93	0.93
Percent Heavy Veh, %	8	8	5	5	1	1
Cap, veh/h	120	152	1050	147	600	1446
Arrive On Green	0.17	0.15	0.67	0.65	0.06	0.77
Sat Flow, veh/h	699	882	1566	220	1795	1885
Grp Volume(v), veh/h	225	0	0	552	191	1344
Grp Sat Flow(s),veh/h/ln	1588	0	0	1786	1795	1885
Q Serve(g_s), s	18.0	0.0	0.0	19.5	4.2	75.8
Cycle Q Clear(g_c), s	18.0	0.0	0.0	19.5	4.2	75.8
Prop In Lane	0.44	0.56		0.12	1.00	
Lane Grp Cap(c), veh/h	273	0	0	1197	600	1446
V/C Ratio(X)	0.83	0.00	0.00	0.46	0.32	0.93
Avail Cap(c_a), veh/h	318	0	0	1271	609	1519
HCM Platoon Ratio	1.00	1.00	1.00	1.00	1.00	1.00
Upstream Filter(I)	1.00	0.00	0.00	1.00	1.00	1.00
Uniform Delay (d), s/veh	53.0	0.0	0.0	10.4	7.5	12.4
Incr Delay (d2), s/veh	14.2	0.0	0.0	0.4	0.4	10.4
Initial Q Delay(d3),s/veh	0.0	0.0	0.0	0.0	0.0	0.0
%ile BackOfQ(50%),veh/ln	8.3	0.0	0.0	7.5	1.5	30.4
Unsig. Movement Delay, s/veh						
LnGrp Delay(d),s/veh	67.3	0.0	0.0	10.8	8.0	22.7
LnGrp LOS	E	A	A	B	A	C
Approach Vol, veh/h	225		552			1535
Approach Delay, s/veh	67.3		10.8			20.9
Approach LOS	E		B			C

Timer - Assigned Phs	1	2			6	8
Phs Duration (G+Y+Rc), s	11.7	92.9			104.6	26.5
Change Period (Y+Rc), s	5.5	* 8.1			* 8.1	6.3
Max Green Setting (Gmax), s	6.9	* 90			* 1E2	24.0
Max Q Clear Time (g_c+I1), s	6.2	21.5			77.8	20.0
Green Ext Time (p_c), s	0.1	6.6			18.7	0.3

Intersection Summary	
HCM 6th Ctrl Delay	23.0
HCM 6th LOS	C

Notes

User approved pedestrian interval to be less than phase max green.

User approved volume balancing among the lanes for turning movement.

* HCM 6th computational engine requires equal clearance times for the phases crossing the barrier.

5 Day Schedule

Movement	WBL	WBR	NBT	NBR	SBL	SBT
Lane Configurations						
Traffic Volume (veh/h)	33	170	970	188	69	325
Future Volume (veh/h)	33	170	970	188	69	325
Initial Q (Qb), veh	0	0	0	0	0	0
Ped-Bike Adj(A_pbT)	1.00	1.00		1.00	1.00	
Parking Bus, Adj	1.00	1.00	1.00	1.00	1.00	1.00
Work Zone On Approach	No		No			No
Adj Sat Flow, veh/h/ln	1618	1618	1856	1856	1826	1826
Adj Flow Rate, veh/h	35	183	1043	202	74	349
Peak Hour Factor	0.93	0.93	0.93	0.93	0.93	0.93
Percent Heavy Veh, %	19	19	3	3	5	5
Cap, veh/h	35	184	1032	200	100	1369
Arrive On Green	0.16	0.16	0.68	0.68	0.03	0.75
Sat Flow, veh/h	223	1167	1510	293	1739	1826
Grp Volume(v), veh/h	219	0	0	1245	74	349
Grp Sat Flow(s),veh/h/ln	1397	0	0	1803	1739	1826
Q Serve(g_s), s	24.3	0.0	0.0	106.1	2.4	9.2
Cycle Q Clear(g_c), s	24.3	0.0	0.0	106.1	2.4	9.2
Prop In Lane	0.16	0.84		0.16	1.00	
Lane Grp Cap(c), veh/h	220	0	0	1232	100	1369
V/C Ratio(X)	0.99	0.00	0.00	1.01	0.74	0.26
Avail Cap(c_a), veh/h	220	0	0	1232	108	1369
HCM Platoon Ratio	1.00	1.00	1.00	1.00	1.00	1.00
Upstream Filter(I)	1.00	0.00	0.00	1.00	1.00	1.00
Uniform Delay (d), s/veh	65.3	0.0	0.0	24.6	46.8	6.0
Incr Delay (d2), s/veh	58.7	0.0	0.0	28.3	24.0	0.1
Initial Q Delay(d3),s/veh	0.0	0.0	0.0	0.0	0.0	0.0
%ile BackOfQ(50%),veh/ln	12.3	0.0	0.0	51.6	2.7	3.5
Unsig. Movement Delay, s/veh						
LnGrp Delay(d),s/veh	124.0	0.0	0.0	52.9	70.7	6.2
LnGrp LOS	F	A	A	F	E	A
Approach Vol, veh/h	219		1245			423
Approach Delay, s/veh	124.0		52.9			17.5
Approach LOS	F		D			B

Timer - Assigned Phs	1	2				6	8
Phs Duration (G+Y+Rc), s	10.3	114.2				124.5	30.8
Change Period (Y+Rc), s	5.5	* 8.1				* 8.1	6.3
Max Green Setting (Gmax), s	5.5	* 1.1E2				* 1.2E2	24.5
Max Q Clear Time (g_c+I1), s	4.4	108.1				11.2	26.3
Green Ext Time (p_c), s	0.0	0.0				3.6	0.0

Intersection Summary	
HCM 6th Ctrl Delay	53.2
HCM 6th LOS	D

Notes

User approved pedestrian interval to be less than phase max green.

User approved volume balancing among the lanes for turning movement.

* HCM 6th computational engine requires equal clearance times for the phases crossing the barrier.

Movement	WBL	WBR	NBT	NBR	SBL	SBT
Lane Configurations						
Traffic Volume (veh/h)	79	147	440	104	132	450
Future Volume (veh/h)	79	147	440	104	132	450
Initial Q (Qb), veh	0	0	0	0	0	0
Ped-Bike Adj(A_pbT)	1.00	1.00		1.00	1.00	
Parking Bus, Adj	1.00	1.00	1.00	1.00	1.00	1.00
Work Zone On Approach	No		No			No
Adj Sat Flow, veh/h/ln	1233	1233	1796	1796	1678	1678
Adj Flow Rate, veh/h	86	160	478	113	143	489
Peak Hour Factor	0.92	0.92	0.92	0.92	0.92	0.92
Percent Heavy Veh, %	45	45	7	7	15	15
Cap, veh/h	108	200	588	139	333	993
Arrive On Green	0.28	0.25	0.42	0.37	0.10	0.59
Sat Flow, veh/h	379	704	1404	332	1598	1678
Grp Volume(v), veh/h	247	0	0	591	143	489
Grp Sat Flow(s),veh/h/ln	1087	0	0	1736	1598	1678
Q Serve(g_s), s	13.6	0.0	0.0	19.4	3.0	10.8
Cycle Q Clear(g_c), s	13.6	0.0	0.0	19.4	3.0	10.8
Prop In Lane	0.35	0.65		0.19	1.00	
Lane Grp Cap(c), veh/h	309	0	0	726	333	993
V/C Ratio(X)	0.80	0.00	0.00	0.81	0.43	0.49
Avail Cap(c_a), veh/h	439	0	0	813	344	1069
HCM Platoon Ratio	1.00	1.00	1.00	1.00	1.00	1.00
Upstream Filter(I)	1.00	0.00	0.00	1.00	1.00	1.00
Uniform Delay (d), s/veh	22.1	0.0	0.0	16.8	12.5	7.6
Incr Delay (d2), s/veh	6.8	0.0	0.0	6.3	1.2	0.5
Initial Q Delay(d3),s/veh	0.0	0.0	0.0	0.0	0.0	0.0
%ile BackOfQ(50%),veh/ln	3.9	0.0	0.0	8.1	1.0	3.2
Unsig. Movement Delay, s/veh						
LnGrp Delay(d),s/veh	28.8	0.0	0.0	23.1	13.8	8.1
LnGrp LOS	C	A	A	C	B	A
Approach Vol, veh/h	247		591			632
Approach Delay, s/veh	28.8		23.1			9.4
Approach LOS	C		C			A

Timer - Assigned Phs	1	2				6	8
Phs Duration (G+Y+Rc), s	10.1	31.9				42.1	22.3
Change Period (Y+Rc), s	5.5	* 8.1				* 8.1	6.3
Max Green Setting (Gmax), s	5.1	* 27				* 37	23.7
Max Q Clear Time (g_c+I1), s	5.0	21.4				12.8	15.6
Green Ext Time (p_c), s	0.0	2.4				4.7	0.5

Intersection Summary	
HCM 6th Ctrl Delay	18.2
HCM 6th LOS	B

Notes

User approved pedestrian interval to be less than phase max green.

User approved volume balancing among the lanes for turning movement.

* HCM 6th computational engine requires equal clearance times for the phases crossing the barrier.

Movement	WBL	WBR	NBT	NBR	SBL	SBT
Lane Configurations						
Traffic Volume (veh/h)	107	130	450	70	189	1250
Future Volume (veh/h)	107	130	450	70	189	1250
Initial Q (Qb), veh	0	0	0	0	0	0
Ped-Bike Adj(A_pbT)	1.00	1.00		1.00	1.00	
Parking Bus, Adj	1.00	1.00	1.00	1.00	1.00	1.00
Work Zone On Approach	No		No			No
Adj Sat Flow, veh/h/ln	1781	1781	1826	1826	1885	1885
Adj Flow Rate, veh/h	115	140	484	75	203	1344
Peak Hour Factor	0.93	0.93	0.93	0.93	0.93	0.93
Percent Heavy Veh, %	8	8	5	5	1	1
Cap, veh/h	127	155	1044	162	595	1448
Arrive On Green	0.18	0.16	0.68	0.66	0.06	0.77
Sat Flow, veh/h	714	869	1544	239	1795	1885
Grp Volume(v), veh/h	256	0	0	559	203	1344
Grp Sat Flow(s),veh/h/ln	1589	0	0	1783	1795	1885
Q Serve(g_s), s	23.4	0.0	0.0	22.0	5.0	85.2
Cycle Q Clear(g_c), s	23.4	0.0	0.0	22.0	5.0	85.2
Prop In Lane	0.45	0.55		0.13	1.00	
Lane Grp Cap(c), veh/h	283	0	0	1206	595	1448
V/C Ratio(X)	0.91	0.00	0.00	0.46	0.34	0.93
Avail Cap(c_a), veh/h	283	0	0	1299	601	1539
HCM Platoon Ratio	1.00	1.00	1.00	1.00	1.00	1.00
Upstream Filter(I)	1.00	0.00	0.00	1.00	1.00	1.00
Uniform Delay (d), s/veh	60.2	0.0	0.0	11.4	8.3	13.9
Incr Delay (d2), s/veh	30.3	0.0	0.0	0.4	0.5	10.1
Initial Q Delay(d3),s/veh	0.0	0.0	0.0	0.0	0.0	0.0
%ile BackOfQ(50%),veh/ln	11.9	0.0	0.0	8.7	1.9	35.3
Unsig. Movement Delay, s/veh						
LnGrp Delay(d),s/veh	90.5	0.0	0.0	11.8	8.8	24.0
LnGrp LOS	F	A	A	B	A	C
Approach Vol, veh/h	256		559			1547
Approach Delay, s/veh	90.5		11.8			22.0
Approach LOS	F		B			C

Timer - Assigned Phs	1	2				6	8
Phs Duration (G+Y+Rc), s	12.5	105.0				117.5	30.3
Change Period (Y+Rc), s	5.5	* 8.1				* 8.1	6.3
Max Green Setting (Gmax), s	7.5	* 1E2				* 1.2E2	24.0
Max Q Clear Time (g_c+I1), s	7.0	24.0				87.2	25.4
Green Ext Time (p_c), s	0.0	6.7				22.2	0.0

Intersection Summary	
HCM 6th Ctrl Delay	27.0
HCM 6th LOS	C

Notes

User approved pedestrian interval to be less than phase max green.

User approved volume balancing among the lanes for turning movement.

* HCM 6th computational engine requires equal clearance times for the phases crossing the barrier.

Intersection	
Int Delay, s/veh	2.8

Movement	EBL	EBT	EBR	WBL	WBT	WBR	NBL	NBT	NBR	SBL	SBT	SBR
Lane Configurations												
Traffic Vol, veh/h	5	161	95	95	227	5	30	0	10	5	5	10
Future Vol, veh/h	5	161	95	95	227	5	30	0	10	5	5	10
Conflicting Peds, #/hr	0	0	0	0	0	0	0	0	0	0	0	0
Sign Control	Free	Free	Free	Free	Free	Free	Stop	Stop	Stop	Stop	Stop	Stop
RT Channelized	-	-	None	-	-	None	-	-	None	-	-	None
Storage Length	-	-	-	-	-	-	-	-	-	-	-	-
Veh in Median Storage, #	-	0	-	-	0	-	-	0	-	-	0	-
Grade, %	-	0	-	-	0	-	-	0	-	-	0	-
Peak Hour Factor	89	89	89	89	89	89	89	89	89	89	89	89
Heavy Vehicles, %	18	18	18	13	13	13	0	0	0	53	53	53
Mvmt Flow	6	181	107	107	255	6	34	0	11	6	6	11

Major/Minor	Major1			Major2			Minor1			Minor2		
Conflicting Flow All	261	0	0	288	0	0	728	722	144	575	772	258
Stage 1	-	-	-	-	-	-	247	247	-	472	472	-
Stage 2	-	-	-	-	-	-	481	475	-	103	300	-
Critical Hdwy	4.37	-	-	4.295	-	-	7.3	6.5	6.9	8.095	7.295	6.995
Critical Hdwy Stg 1	-	-	-	-	-	-	6.5	5.5	-	6.895	6.295	-
Critical Hdwy Stg 2	-	-	-	-	-	-	6.1	5.5	-	7.295	6.295	-
Follow-up Hdwy	2.371	-	-	2.3235	-	-	3.5	4	3.3	4.0035	4.5035	3.8035
Pot Cap-1 Maneuver	1204	-	-	1204	-	-	328	355	884	334	261	655
Stage 1	-	-	-	-	-	-	741	706	-	468	464	-
Stage 2	-	-	-	-	-	-	570	561	-	772	567	-
Platoon blocked, %		-	-		-	-						
Mov Cap-1 Maneuver	1204	-	-	1204	-	-	290	316	884	302	233	655
Mov Cap-2 Maneuver	-	-	-	-	-	-	290	316	-	302	233	-
Stage 1	-	-	-	-	-	-	737	702	-	465	416	-
Stage 2	-	-	-	-	-	-	495	503	-	758	564	-

Approach	EB	WB	NB	SB
HCM Control Delay, s	0.2	2.4	16.8	15.2
HCM LOS			C	C

Minor Lane/Major Mvmt	NBLn1	EBL	EBT	EBR	WBL	WBT	WBR	SBLn1
Capacity (veh/h)	349	1204	-	-	1204	-	-	375
HCM Lane V/C Ratio	0.129	0.005	-	-	0.089	-	-	0.06
HCM Control Delay (s)	16.8	8	0	-	8.3	0	-	15.2
HCM Lane LOS	C	A	A	-	A	A	-	C
HCM 95th %tile Q(veh)	0.4	0	-	-	0.3	-	-	0.2

Movement	WBL	WBR	NBT	NBR	SBL	SBT
Lane Configurations						
Traffic Volume (veh/h)	110	147	450	72	204	1250
Future Volume (veh/h)	110	147	450	72	204	1250
Initial Q (Qb), veh	0	0	0	0	0	0
Ped-Bike Adj(A_pbT)	1.00	1.00		1.00	1.00	
Parking Bus, Adj	1.00	1.00	1.00	1.00	1.00	1.00
Work Zone On Approach	No		No			No
Adj Sat Flow, veh/h/ln	1900	1900	1826	1826	1856	1856
Adj Flow Rate, veh/h	118	158	484	77	219	1344
Peak Hour Factor	0.93	0.93	0.93	0.93	0.93	0.93
Percent Heavy Veh, %	0	0	5	5	3	3
Cap, veh/h	109	146	965	153	540	1347
Arrive On Green	0.17	0.17	0.63	0.63	0.06	0.73
Sat Flow, veh/h	636	851	1537	245	1767	1856
Grp Volume(v), veh/h	277	0	0	561	219	1344
Grp Sat Flow(s),veh/h/ln	1493	0	0	1782	1767	1856
Q Serve(g_s), s	24.0	0.0	0.0	24.0	5.9	100.9
Cycle Q Clear(g_c), s	24.0	0.0	0.0	24.0	5.9	100.9
Prop In Lane	0.43	0.57		0.14	1.00	
Lane Grp Cap(c), veh/h	256	0	0	1118	540	1347
V/C Ratio(X)	1.08	0.00	0.00	0.50	0.41	1.00
Avail Cap(c_a), veh/h	256	0	0	1118	583	1347
HCM Platoon Ratio	1.00	1.00	1.00	1.00	1.00	1.00
Upstream Filter(I)	1.00	0.00	0.00	1.00	1.00	1.00
Uniform Delay (d), s/veh	58.0	0.0	0.0	14.2	10.4	19.1
Incr Delay (d2), s/veh	80.0	0.0	0.0	0.5	0.7	24.0
Initial Q Delay(d3),s/veh	0.0	0.0	0.0	0.0	0.0	0.0
%ile BackOfQ(50%),veh/ln	14.7	0.0	0.0	9.7	2.3	46.9
Unsig. Movement Delay, s/veh						
LnGrp Delay(d),s/veh	138.0	0.0	0.0	14.7	11.1	43.1
LnGrp LOS	F	A	A	B	B	D
Approach Vol, veh/h	277		561			1563
Approach Delay, s/veh	138.0		14.7			38.7
Approach LOS	F		B			D

Timer - Assigned Phs	1	2				6	8
Phs Duration (G+Y+Rc), s	13.8	95.9				109.7	30.3
Change Period (Y+Rc), s	5.5	* 8.1				* 8.1	6.3
Max Green Setting (Gmax), s	11.7	* 85				* 1E2	24.0
Max Q Clear Time (g_c+I1), s	7.9	26.0				102.9	26.0
Green Ext Time (p_c), s	0.3	6.7				0.0	0.0

Intersection Summary	
HCM 6th Ctrl Delay	44.5
HCM 6th LOS	D

Notes

User approved pedestrian interval to be less than phase max green.

User approved volume balancing among the lanes for turning movement.

* HCM 6th computational engine requires equal clearance times for the phases crossing the barrier.