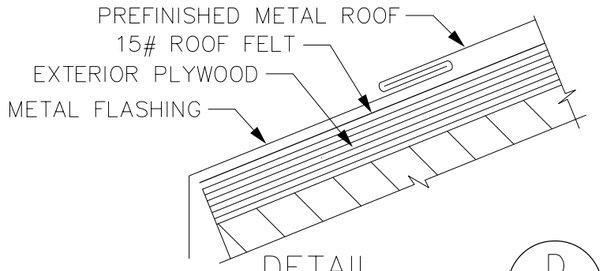

DETAIL D
NTS

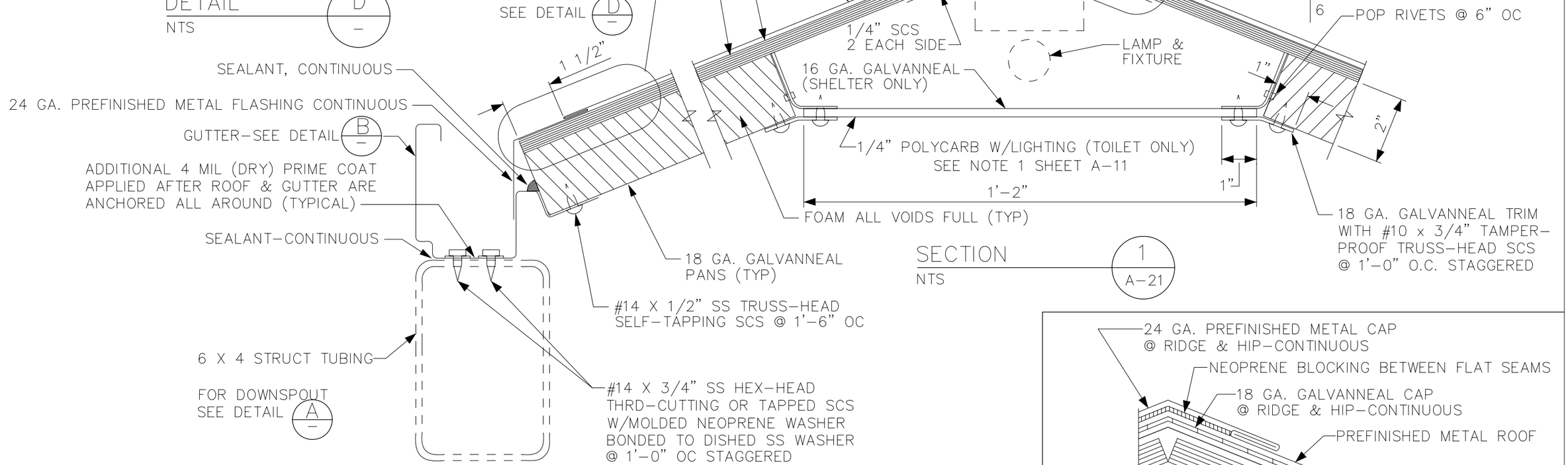

SECTION 1 / A–21
NTS

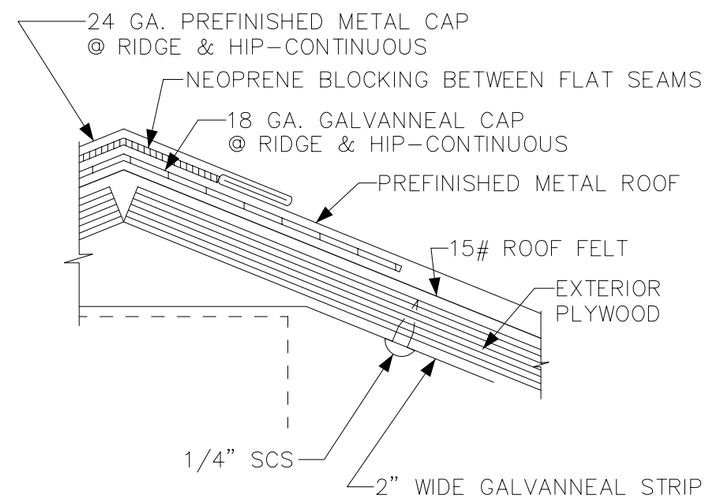

DETAIL C
NTS

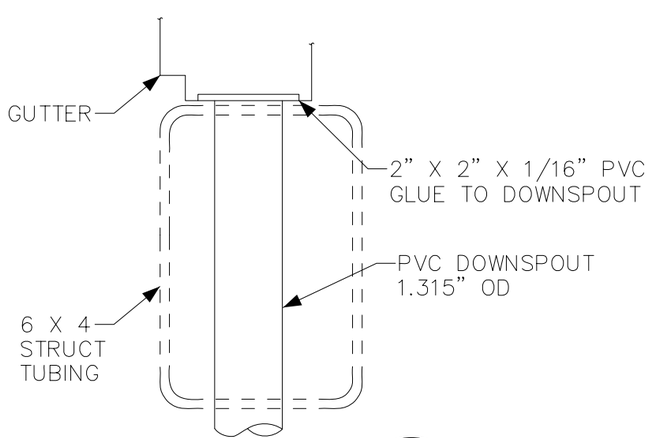

DETAIL A
NTS

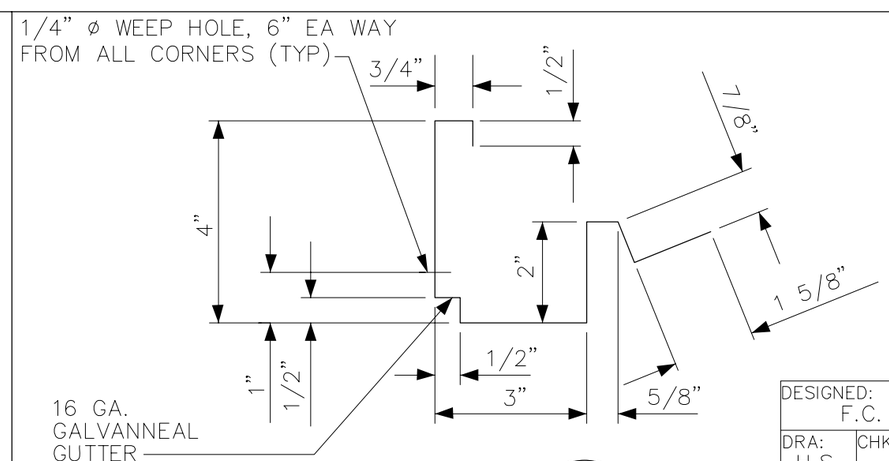

DETAIL B
NTS

DESIGNED: F.C.	METRO Municipality of Metropolitan Seattle		DATE: MAR 1990
DRA: H.S. CHKD:	SCALE: AS NOTED	SHELTER FABRICATION	FILE:
RECOM:	CONTRACT:	ROOF – SERIES 30 & 40	DWG NO: A–22
APPR:			SHT OF

V:\Library & Standards\Standards\PFPMetro\PFP Standard Shelter Architectural Set\A–22.dwg XREFS:
Nov 02, 2005–04:25:53pm By SuterJ