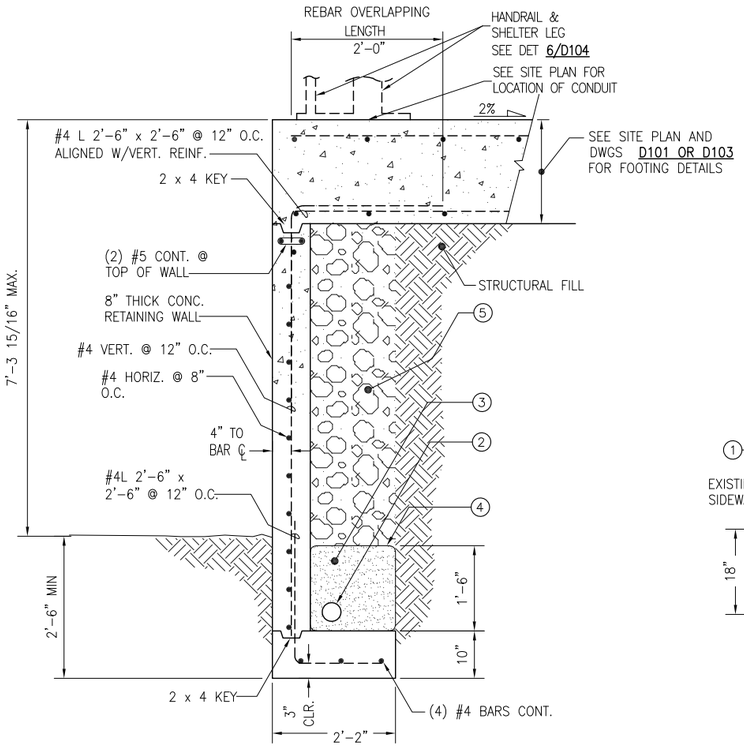

COUNTERFORT WALL
WITH INTERGRATED SHELTER FOOTING

DETAIL 1
SCALE: NTS ---

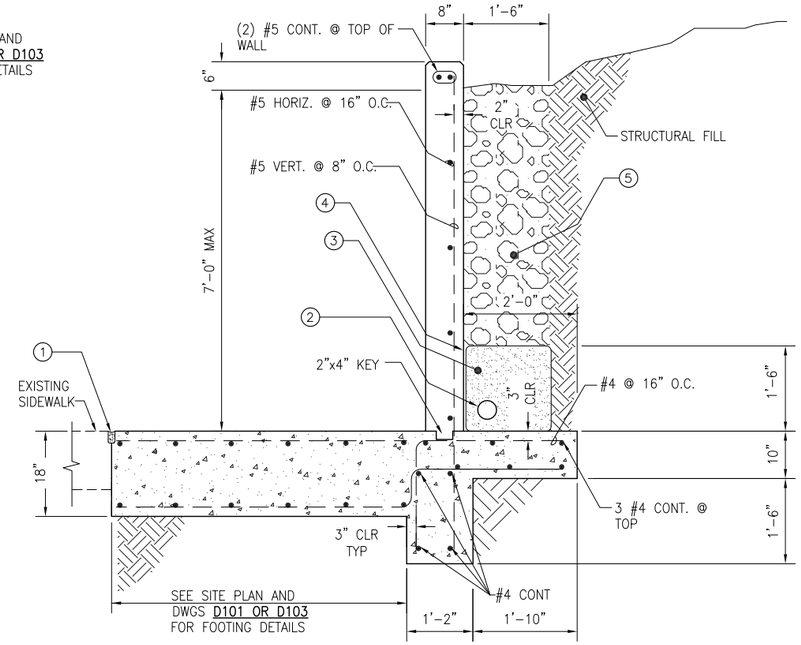

COUNTERFORT WALL
WITH INTERGRATED SHELTER FOOTING

DETAIL 2
SCALE: NTS ---

CONSTRUCTION NOTES

1. JOINT PER DET 3/D101 TO ISOLATE EDGES FROM PAVEMENT, SIDEWALKS, OR OTHER STRUCTURES.
2. 4"ø PERFORATED PIPE, SEE PLANS FOR DAYLIGHTING REQUIREMENTS.
3. 1" MINUS WASHED ROCK.
4. FILTER FABRIC
5. 4" TO 6" QUARRY SPALLS.

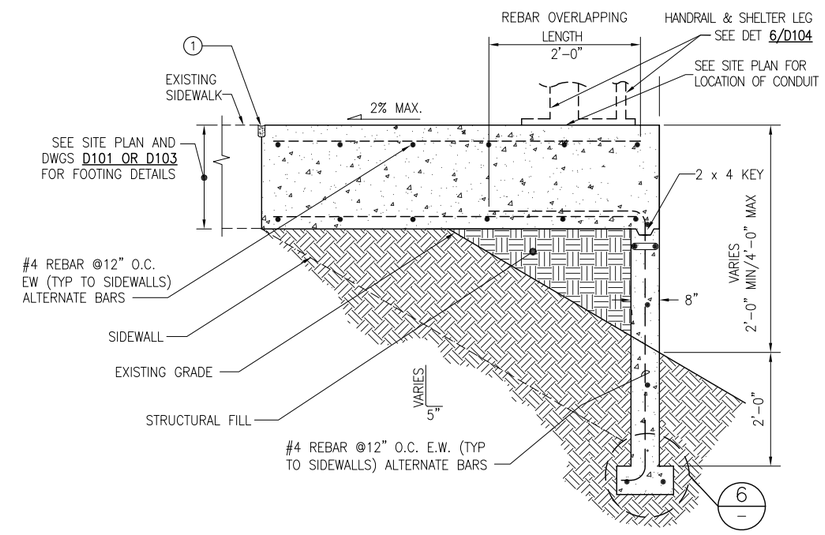

COMBINED OVER 2' HIGH
FILL WALL–FOOTING/FOUNDATION

DETAIL 4
SCALE: NTS ---

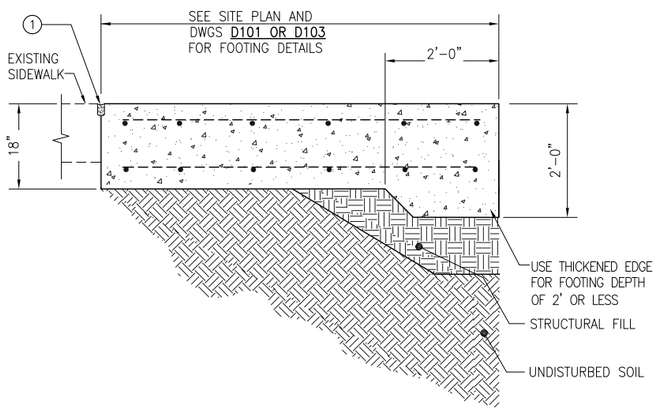

FOOTING W/THICKENED EDGE

DETAIL 3
SCALE: NTS ---

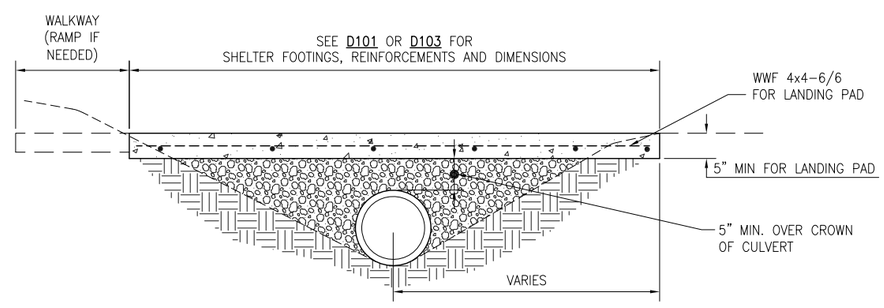

REINFORCED SLAB/SHELTER FOOTING OVER DRAINAGE DITCH

DETAIL 5
SCALE: NTS ---

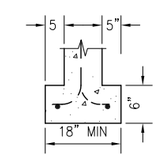

DETAIL 6
SCALE: NTS ---

KCMT 2020-2021 STANDARD DETAILS

No.	REVISION	BY	APP'D	DATE
△				
△				
△				
△				

811 Know what's below. Call before you dig.

DESIGNED: K. CHANG YUEN	APPROVED: D. CRIPPEN
DRAWN: G. CAREY	
CHECKED: K. CHANG YUEN	PROJECT NO: -
CHECKED: C. ASQUITH	CONTRACT NO: -

King County METRO

METRO TRANSIT CAPITAL DIVISION
TRANSIT PASSENGER FACILIITES - IMPROVEMENTS

RETAINING WALLS AND OTHER DETAILS

DATE: 4/2020
DRAWING NO: D105
SHEET NO: 12 OF 20

\\DOT.kingcounty.lcl\Trans\DOC\CAD_Folders\Projects\Passenger Facilities\Standard Details\Passenger Facilities Standard Details\2020-2021 STANDARD DETAILS\D105.dwg | Layout: D105
PLOTTED: Apr 21, 2020-12:09:53pm By GCarey
XREFS: KCMTD-BORDER.dwg
IMAGES: