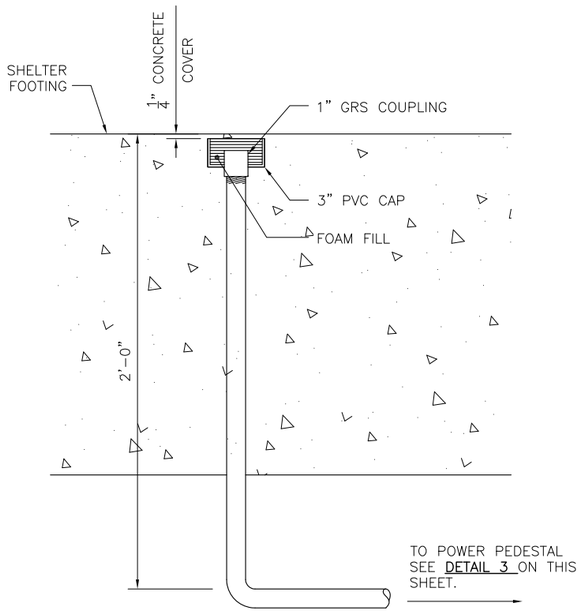

ELECTRICAL CONDUIT STUB-UP

DETAIL 1
SCALE: NONE ---

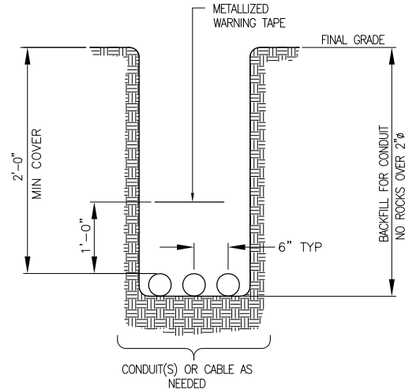

CONDUIT(S) AND CABLE TRENCH

DETAIL 2
SCALE: NO SCALE –

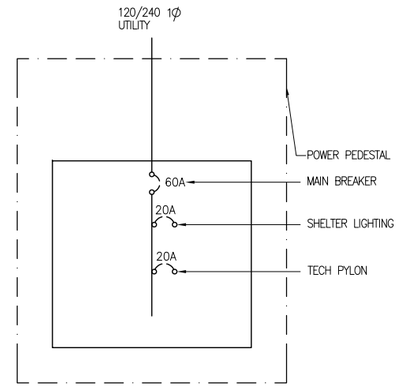

ONE LINE DIAGRAM

DETAIL 4
SCALE: NO SCALE –

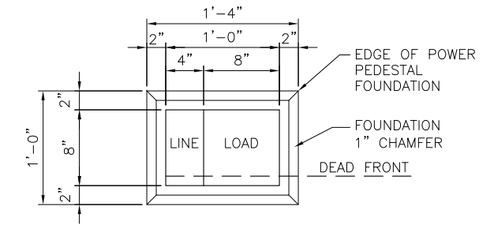

TOP VIEW

NOTE:
1. ANCHOR BOLT SPACING PROVIDED BY MANUFACTURER.

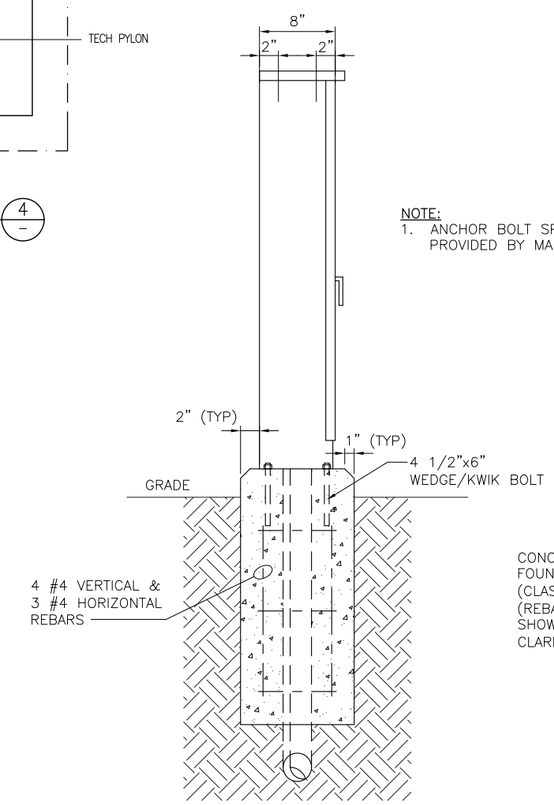

SIDE VIEW

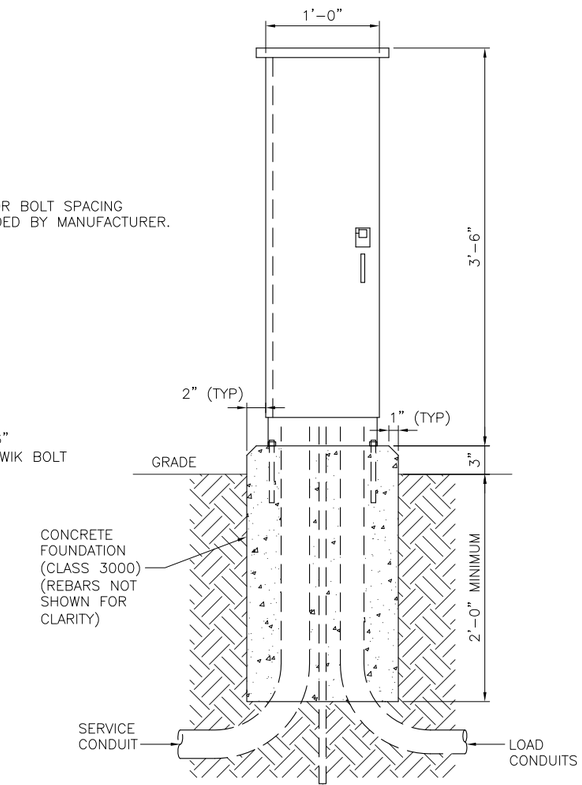

FRONT VIEW

GROUND ROD 3/4"x120" COPPER-CLAD WITH GROUND CLAMP. A SECOND GROUND SHALL BE INSTALLED A MINIMUM OF 8' AWAY IN A GROUND ROD HANDHOLE AS PER CITY OF SEATTLE STANDARD PLAN NO 550b. COORDINATE WITH ELECTRICAL INSPECTOR FOR LOCATION. INSTALL 3/4" GRS CONDUIT WITH #6 GROUND WIRE BETWEEN CABINET FOUNDATION AND GROUND ROD HANDHOLE.

POWER PEDESTAL FOUNDATION

DETAIL 3
SCALE: NONE ---

CONSTRUCTION NOTES

ELECTRICAL CONDUIT

1. INSTALLATIONS SHALL CONFORM TO ALL APPLICABLE CODES AND THE KING COUNTY ELECTRICAL SPECIFICATIONS.
2. ALL NEW CONDUIT INSTALLED UNDERGROUND SHALL HAVE A MINIMUM COVER OF 24 INCHES.
3. PLACE 6" WIDE WARNING TAPE 12 INCHES BELOW GRADE OVER ALL CONDUIT RUNS. TAPE SHALL BE MAGNATEC®, OR PRODUCT EQUIVALENT IN MATERIAL TYPE, SIZE, STYLE AND DURABILITY, SUITABLE FOR THIS SPECIFIED APPLICATION.
4. STUB UP CONDUIT IN LOCATIONS INDICATED BY PLAN. CONFIGURE AS DESCRIBED BY DETAIL 1/–. INSTALL COUPLING AND THREADED PLUG. SET PVC CAP ¼-INCH BELOW FINISH GRADE DESIGN OF FOUNDATION AT STUB-UP POINTS. FILL CAP CAVITY WITH FOAM AND COMPLY WITH MANUFACTURER'S INSTRUCTIONS AND RECOMMENDATIONS FOR DRYING TIME PRIOR TO POURING CONCRETE.
5. EPOXY ALL CONDUIT JOINTS TO ENSURE WATER CANNOT ENTER THE CONDUIT THROUGH THE CONNECTION. DO NOT EPOXY THE REMOVABLE PLUG.
6. COORDINATE THE REQUIREMENTS OF THIS WORK WITH THE RELATED WORK OF OTHER TRADES, INCLUDING CONCRETE FORMING AND POURING.
7. THE CONTRACTOR SHALL PLACE A GROUNDING ROD IN EACH HANDHOLE IN ACCORDANCE WITH NEC 250.53 (G) AND 250.66 (A) AND INSTALL A BELL END OR BONDING BUSHING ON THE CONDUIT. THE CONTRACTOR SHALL BOND ALL METAL PARTS OF THE HANDHOLE TO THE GROUND ROD, PROVIDE SUFFICIENT SLACK IN GROUNDING THE LID TO ALLOW REMOVAL.
8. SERVICE ENTRANCE CONDUIT SHALL BE 2 INCHES OR SMALLER, AS REQUIRED BY SERVICE CONDUCTORS.
9. ALL ELBOWS GRC MUST BE WRAPPED WITH 2 LAYERS OF ANTI-CORROSION TAPE OR PAINTED. ALL PVC MUST BE SCHEDULE 80 PVC.
10. SHELTER WIRE SHALL BE #12 BLACK, WHITE, GREEN. ALL WIRES ARE NOT ALLOWED TO BE SPLICED. GROUNDING SHALL BE BONDED TO REBAR, SHELTERS, AND POLES.

KCMT 2020-2021 STANDARD DETAILS

No.	REVISION	BY	APP'D	DATE
△				
△				
△				
△				

811 Know what's below. Call before you dig.

DESIGNED: S. ANOD	APPROVED: D. CRIPPEN
DRAWN: M. MANIMTIM	
CHECKED:	PROJECT NO: -
CHECKED: C. REYNOLDS	CONTRACT NO: -

King County METRO

METRO TRANSIT CAPITAL DIVISION
TRANSIT PASSENGER FACILIITES - IMPROVEMENTS

HANDHOLE
CONDUIT DETAILS
STANDARD SHELTER

DATE: 4/2020
DRAWING NO: D112
SHEET NO: 20 OF 20

\\DOT.kingcounty.lcl\Transit\DOCAD_Folder\Projects\Passenger Facilities\Standard Details\Passenger Facilities Standard Details\2020-2021 STANDARD DETAILS\D112.dwg | Layout: D112
PLOTTED: Apr 21, 2020-10:02:57pm By: GGarey
XREFS: CTB22X34_RR C & D ELECTRICAL.dwg; KCMTD-BORDER-ELEC.dwg
IMAGES: