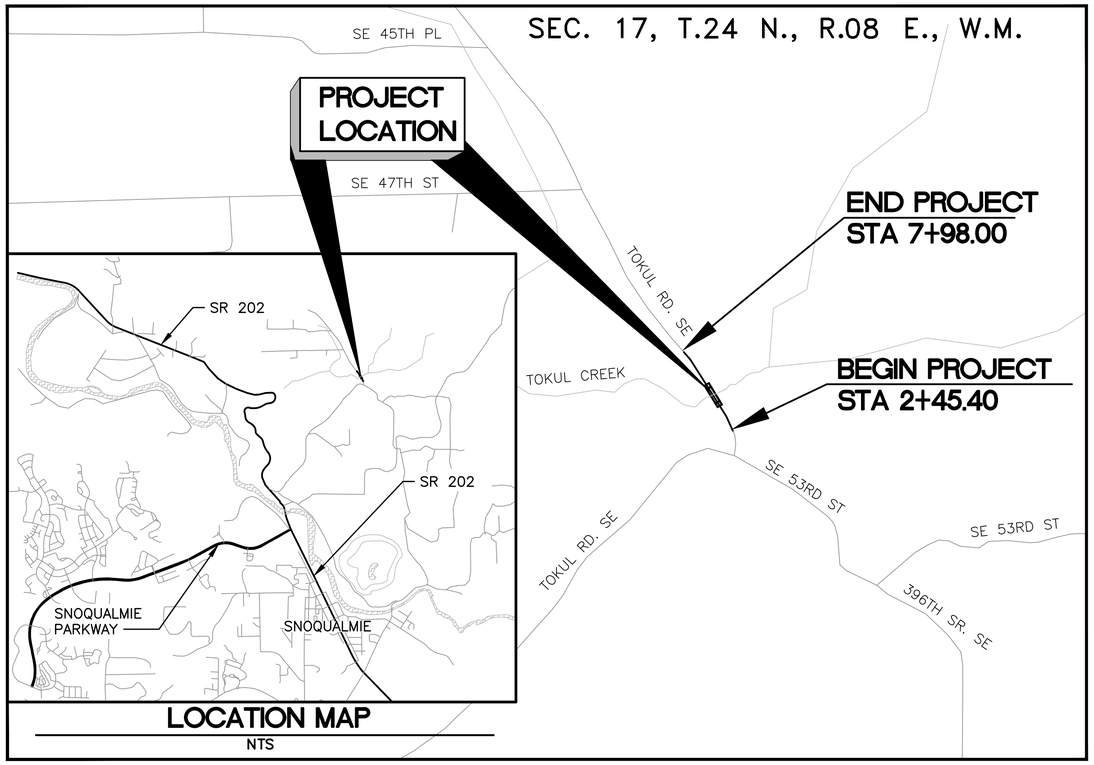

LOCATION MAP
NTS

VICINITY MAP
NTS

UPPER TOKUL CREEK BRIDGE #271B

BRIDGE REPLACEMENT PROJECT

DRAWING INDEX

REF. NO.	SHEET NO.	DESCRIPTION
GN01	1	COVER SHEET
GN02	2	LEGEND AND ABBREVIATIONS
XS01	3	TYPICAL ROADWAY SECTIONS
SP01	4	DIVERSION ROADWAY PLAN AND PROFILE
SP02	5	DIVERSION ROADWAY PLAN AND PROFILE
SP03	6	SITE PREPARATION PLAN
SP04	7	TREE SCHEDULE
EC01	8	EROSION CONTROL PLAN
EC02	9	EROSION CONTROL DETAILS AND NOTES
RD01	10	ROADWAY PLAN AND PROFILE
RD02	11	ROADWAY PLAN AND PROFILE
DW01	12	DRIVEWAY PLAN AND PROFILE
CH01	13	SIGINING PLAN
RP01	14	RESTORATION PLANS
RP02	15	RESTORATION PLANS
RP03	16	RESTORATION PLANS
RP04	17	RESTORATION PLANS
TS01	18	DIVERSION TEMPORARY TRAFFIC CONTROL AND SIGNAL PLAN
EB01	19	BRIDGE LAYOUT
EB02	20	CONSTRUCTION SEQUENCE
EB03	21	TEMPORARY BRIDGE LAYOUT
EB04	22	BORING LOGS 1 OF 2
EB05	23	BORING LOGS 2 OF 2
EB06	24	FOUNDATION LAYOUT
EB07	25	ABUTMENT DETAILS 1 OF 2
EB08	26	ABUTMENT DETAILS 2 OF 2
EB09	27	FRAMING PLAN
EB10	28	TYPICAL SECTION
EB11	29	END DIAPHRAGM DETAILS
EB12	30	DECK REINFORCING PLAN
EB13	31	DECK REINFORCING SECTION
EB14	32	BRIDGE APPROACH SLAB DETAILS 1 OF 2
EB15	33	BRIDGE APPROACH SLAB DETAILS 2 OF 2

60% DESIGN PROGRESS 12/2/20

Know what's below.
Call before you dig.

SURVEY JOB NO:	19030	05/2019
CHECKED:	J. EVANS	08/2019
CAD ENTERED:	D. FOSTER	12/2020
DESIGNED:	R. KOESTER/A. CHARNESKI	12/2020
CHECKED:	S. SOISETH/E. FERLUGA	12/2020
SUPERVISOR:	S. SOISETH	12/2020

NUM.	REVISION	BY	DATE

DAVID EVANS AND ASSOCIATES INC.

SCOTT B. SOISETH, STATE OF WASHINGTON, 35218, REGISTERED PROFESSIONAL ENGINEER — PRELIMINARY

FED. AID No. N/A

PROJECT No. 1135999

SURVEY No. TBD

MAINTENANCE DIVISION No. 2

JOANN H. KOSA FERLUGA, STATE OF WASHINGTON, 34413, REGISTERED PROFESSIONAL ENGINEER — PRELIMINARY

60% DESIGN (NOT FOR CONSTRUCTION)

KING COUNTY DEPT. OF LOCAL SERVICES
JOHN TAYLOR, DIRECTOR

UPPER TOKUL CREEK BRIDGE #271B
BRIDGE REPLACEMENT PROJECT

COVER SHEET

King County

SHEET 1 OF 33 SHEETS

320-90 (GN01)

Drfo 12/02/20 2:58pm – P:\K\KCOX00000063\0400CAD\TT\SHEETS\TT-CV-001-KCOX0063.dwg

LEGEND

LINETYPES

EXIST.	DESCRIPTION
SURFACE FEATURES:	
	BUILDING LINE (EXIST.)
	CANAL[SCALEABLE](EXIST.)
	CREEK/DITCH CENTERLINE (EXIST.)
	CURB/PAVEMENT/SIDEWALK (EXIST.)
X X X	FENCE (EXIST.)
	GUARDRAIL (EXIST.)
	LAKE/POND
	MARSH/SWAMP PERIMETER
INTERIOR EXTERIOR	WETLAND PERIMETER (DELINEATED BY BIOLOGIST)
WB	WETLAND BUFFER (DELINEATED BY BIOLOGIST)
	RETAINING WALL (EXIST.)
	RIVERBANK/SHORELINE
	SHOULDER (EXIST.)
	ROCK FACING (EXIST.)
OHW OHW	ORDINARY HIGH WATER
100Y	100 YEAR FLOOD LINE
SURVEY:	
	CENTERLINE (EXIST.)
	CONTOUR (DEPRESSION)
	CONTOUR (INTERVAL) (EXIST.)
* * *	CONTOUR (INDEX) (EXIST.)
	EASEMENT (TEMPORARY)
	MATCH LINE
	MEANDER LINE
	PROPERTY LINE (EXIST.)
	RANGE/TOWNSHIP LINE
	RESERVATION/PARK/FOREST (EXIST.)
	RIGHT-OF-WAY (EXIST.)
	CITY-LIMITS
	SECTION LINE
	QUARTER SECTION LINE
	SIXTEENTH SECTION LINE
	STATE/COUNTY/CORPORATE LIMIT
UTILITIES (EXIST.):	
OTV	CABLE TELEVISION (AERIAL)
UTV	CABLE TELEVISION (BURIED)
FO	FIBER OPTIC
FM	FORCE MAIN
G	GAS
6" G	6" GAS LINE
OIL	OIL
OP	POWER (AERIAL)
UP	POWER (BURIED)
SS	SANITARY SEWER
STE	STEAM
SD	STORM DRAIN
12"CMP	(12" CMP) STORM DRAIN
OT	TELEPHONE (AERIAL)
UT	TELEPHONE (BURIED)
	UTILITY SERVICE LINE (GENERAL)
W	WATER
12" W	12" WATER

CONSTRUCT	DESCRIPTION
	BUILDING LINE
	CREEK/DITCH
	CREEK/DITCH CENTERLINE
CB 2/7	CURB(PROP)
	CURB/PAVEMENT/SIDEWALK
X	SILT FENCE
V	HIGH VISIBILITY FENCE
SW	STRAW WATTLE
TC	TURBIDITY CURTAIN
FS	FLAGS & STAKES
	GUARDRAIL
	LAKE/POND
	MARSH/SWAMP PERIMETER
INTERIOR EXTERIOR	WETLAND PERIMETER
WB	WETLAND BUFFER
	RETAINING WALL (CONC. BLOCK)
	RETAINING WALL (GABION)
	RETAINING WALL (GEOSYNTHETIC)
	TEMPORARY BARRIER
	ROCK FACING
	CENTERLINE
	CONTOUR (INTERVAL)
* * *	CONTOUR (INDEX)
	TEMPORARY CONSTRUCTION EASEMENT
	PROPERTY LINE
	RIGHT-OF-WAY (EXIST. DURING DESIGN REVIEW ONLY)
	RIGHT-OF-WAY
	RIGHT-OF-WAY (LIMITED ACCESS) COINCIDENTAL
C	CUT LINE
F	FILL LINE
C&G	CLEARING LIMITS
	SAWCUT

GAS/POWER/TELEPHONE

SYMBOL EXIST.	SYMBOL CONSTRUCT	DESCRIPTION
	G	GAS METER
		GAS VALVE
		PAD MOUNTED TRANSFORMER
P	P	POWER VAULT
		TRANSMISSION TOWER (SCALEABLE)
		UTILITY POLE
		POWER POLE
		UTILITY POLE ANCHOR
T	T	TELEPHONE RISER
T	T	TELEPHONE VAULT

SURVEY

SYMBOL	DESCRIPTION
	ANGLE POINT
	BENCH MARK
	BLOCK CORNER
	IRON PIPE
	MONUMENT (IN CASE)
	MONUMENT (SURFACE)
	OWNERSHIP TIE
16	SECTION CENTER
8 9 17 16	SECTION CORNER
	QUARTER CORNER
	SIXTEENTH CORNER
	CLOSING CORNER
	MEANDER CORNER
MC	WITNESS CORNER
WC	SOIL BORING
	SPOT ELEVATION
	TAX LOT / PARCEL NUMBER
5	INTERSTATE
X-XXXX-XXX-XX	ASSESSOR'S CODE

SYMBOLS

BH	BORING LOCATION
	PERMANENT SIGN / TEMPORARY TRAFFIC CONTROL SIGN
	TEMPORARY TRAFFIC SIGNAL
CE	TEMPORARY STABILIZED CONSTRUCTION ENTRANCE
CL	CLEARING LIMIT
CRL	COIR LOG
DC	DUST CONTROL MEASURES
IP	CATCH BASIN AND CULVERT/ INLET PROTECTION
RR	QUARRY SPALL PROTECTION
SF	SILT FENCE
SW	STRAW WATTLE
TC	TURBIDITY CURTAIN
V	HIGH VISIBILITY FENCE
WQ	WATER QUALITY SAMPLING LOCATION

1 — STRUCTURE DETAILS NO.
5 — SHEET NO.
CALL OUT DESIGNATION

CONTRACTOR SHALL VERIFY LOCATION AND DEPTHS OF ALL EXISTING UTILITIES PRIOR TO CONSTRUCTION

WATER

SYMBOL EXIST.	SYMBOL CONSTRUCT	DESCRIPTION
		GUARD POST

FIRE HYDRANTS:

		FH
		WATER VALVE

ROAD PLAN

SYMBOL	DESCRIPTION
15 10	CUT SLOPE CATCH POINTS(OPTIONAL) (SCALEABLE)
SHOULDER	FILL SLOPE CATCH POINTS(OPTIONAL) (SCALEABLE)

DRAINAGE

SYMBOL EXIST.	SYMBOL CONSTRUCT	DESCRIPTION
		STORM DRAIN CATCH BASIN (GRATE LID)
		STORM DRAIN CATCH BASIN (SOLID LID)
		STORM DRAIN INLET (NO CATCH)
		STORM DRAIN CULVERT
		STORM DRAIN CATCH BASIN TYPE 2
		STORM DRAIN MANHOLE
25 L.F. 12"		STORM PIPE (PROPOSED) DOUBLE LINE TO SIZE OF PIPE DIAMETER

ABBREVIATIONS

ABAND	ABANDONED	QTY	QUANTITY
AC	ASPHALT CONCRETE	R	RADIUS
ACP	ASPHALT CONCRETE PAVEMENT	RD	ROAD
ADJ	ADJUST	REINF	REINFORCED
AH	AHEAD	REQ'D	REQUIRED
AP	ANGLE POINT	ROW	RIGHT-OF-WAY
APPROX.	APPROXIMATELY	RT	RIGHT
ARD	AGREEMENT TO RECONSTRUCT DWY	R/W	RIGHT-OF-WAY
AVE	AVENUE	S	SOUTH/SLOPE
AVG	AVERAGE	SAN	SANITARY
BK	BACK	SCHED	SCHEDULE
℄	BASELINE	SD	STORM DRAIN
BLDG	BUILDING	SECT	SECTION
BLVD	BOULEVARD	SERV	SERVICE
BM	BENCH MARK	SF	SQUARE FEET/FOOT
BMP	BEST MANAGEMENT PRACTICE	SHLD	SHOULDER
BOT	BOTTOM	SHT	SHEET
BRG	BEARING	SP	1 SHIELDED PAIR IN SHINGLE CABLE
BTWN	BETWEEN	SPEC	SPECIAL
BVCE	BEGINNING OF VERTICAL CURVE ELEVATION	SPECS	SPECIFICATIONS
BVCS	BEGINNING OF VERTICAL CURVE STATION	SQ	SQUARE
C	CONDUCTOR	SR	STATE ROUTE
CATV	CABLE TV	SS	SANITARY SEWER
CB	CATCH BASIN	ST	STREET
CL	CLASS	STA	STATION
℄	CENTERLINE	S/W	SIDEWALK
CLR	CLEAR	T	TELEPHONE, TANGENT, TON
CMP	CORRUGATED METAL PIPE	TAN	TANGENT
COMPT	COMPACTED	TBM	TEMPORARY BENCHMARK
CONC	CONCRETE	TCE	TEMPORARY CONSTRUCTION EASEMENT
CONN	CONNECT	TEMP	TEMPORARY
CONST	CONSTRUCTION	TP	TELEPHONE POLE
CSTC	CRUSHED SURFACING TOP COURSE	TYP	TYPICAL
CU	CUBIC	UD	UNDERDRAIN PIPE
CY	CUBIC YARD	UG	UNDERGROUND
CULV	CULVERT	VAR	VARIES
D	DRAIN PIPE	VC	VERTICAL CURVE
DEG OR °	DEGREE, ANGULAR	VERT.	VERTICAL
DIAM	DIAMETER	W	WEST, WATER
DIST	DISTANCE	W/	WITH
DWG	DRAWING	WM	WATER METER
DWY	DRIVEWAY	WM	WATERMAIN
E	EAST, ELECTRICAL	W/O	WITHOUT
EA	EACH	WV	WATER VALVE
EL	ELEVATION	Y	YELLOW
ELEC	ELECTRICAL	Y	YELLOW (FLASH)
EMB	EMBANKMENT	YDS	YARDS
EP	EDGE OF PAVEMENT	&	AND
EQ	EQUATION		
EST	ESTIMATE		
EVCE	END OF VERTICAL CURVE ELEVATION		
EVCS	END OF VERTICAL CURVE STATION		
EXCL	EXCLUDE		
EXIST	EXISTING		
FH	FIRE HYDRANT		
FT OR '	FEET/FOOT		
G	GAS LINE, GREEN		
GALV	GALVANIZED		
GB	GRADE BREAK		
GE	GRATE ELEVATION		
GR	GUARDRAIL		
GRD	GROUND		
GV	GAS VALVE		
HORIZ	HORIZONTAL		
HPS	HIGH PRESSURE SODIUM		
HT	HEIGHT		
HUND	HUNDRED		
HWY	HIGHWAY		
ID	INSIDE DIAMETER		
IE	INVERT ELEVATION		
INV	INVERT		
JB.	JUNCTION BOX		
JTS, JT	JOINTS, JOINT		
JUD	JOINT USE DRIVEWAY		
L	LENGTH OF ARC		
LF	LINEAL FOOT/FEET		
LT	LEFT		
LUMIN	LUMINAIRE		
M	METER		
MAX	MAXIMUM		
MH	MANHOLE		
MIN	MINIMUM		
MISC	MISCELLANEOUS		
MON	MONUMENT		
MUTCD	MANUAL ON UNIFORM TRAFFIC CONTROL DIVICES		
N	NORTH		
NO	NUMBER		
NST	NOT STEEPER THAN		
NTS	NOT TO SCALE		
O-XING	OVERHEAD CROSSING		
O.C.	ON CENTER		
OD	OUTSIDE DIAMETER		
OHW	ORDINARY HIGH WATER		
OP	OVERHEAD POWER		
OT	OVERHEAD TELEPHONE		
P	POLE, POWER		
PAR	PARK ACCESS ROAD		
PAV'T	PAVEMENT		
PC	POINT OF CURVATURE		
PCC	POINT OF COMPOUND CURVE		
P-E	PRE-EMPT		
PED	PEDESTRIAN		
PI	POINT OF INTERSECTION		
ℙ	PROPERTY LINE		
PP	POWER POLE		
PR	PAIR		
PRC	POINT OF REVERSE CURVE		
PSI	POUND PER SQ IN		
PT	POINT OF TANGENT		
PVC	POLYVINYL CHLORIDE		
PVCC	POINT OF VERTICAL COMPOUND CURVE		
PVI	POINT OF VERTICAL INTERSECTION		
PVRC	POINT OF VERTICAL REVERSE CURVE		

811 Know what's below. Call before you dig.

SURVEY JOB NO:	19030	05/2019
CHECKED:	J. EVANS	08/2019
CAD ENTERED:	D. FOSTER	12/2020
DESIGNED:	R. KOESTER	12/2020
CHECKED:	S. SOISETH	12/2020
SUPERVISOR:	S. SOISETH	12/2020

NUM.	REVISION	BY	DATE

DAVID EVANS AND ASSOCIATES INC.

SCOTT B. SOISETH — STATE OF WASHINGTON — 45218 — REGISTERED PROFESSIONAL ENGINEER — PRELIMINARY

FED. AID No. N/A

PROJECT No. 1135999

SURVEY No. TBD

MAINTENANCE DIVISION No. 2

JOANN H. KOSAKA — STATE OF WASHINGTON — 34413 — REGISTERED PROFESSIONAL ENGINEER — PRELIMINARY

60% DESIGN (NOT FOR CONSTRUCTION)

KING COUNTY DEPT. OF LOCAL SERVICES

JOHN TAYLOR, DIRECTOR

UPPER TOKUL CREEK BRIDGE #271B
BRIDGE REPLACEMENT PROJECT

LEGEND AND ABBREVIATIONS

King County

SHEET 2 OF 33 SHEETS

320-90 (GN02)

SEC. 17, T.24 N., R.08 E., W.M.

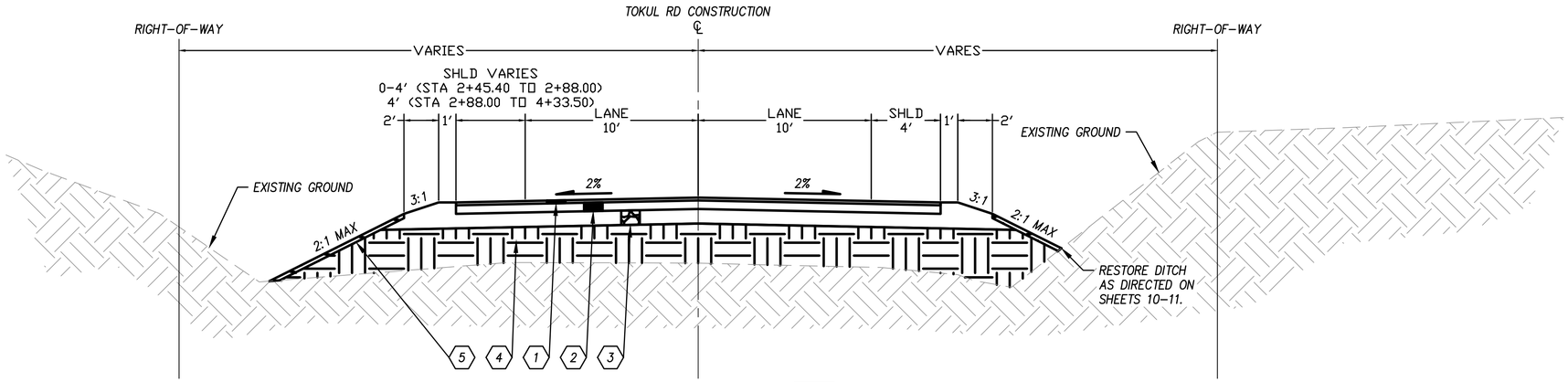

TYPICAL SECTION A

NOT TO SCALE

STA. 2+45.40 TO STA. 4+33.50

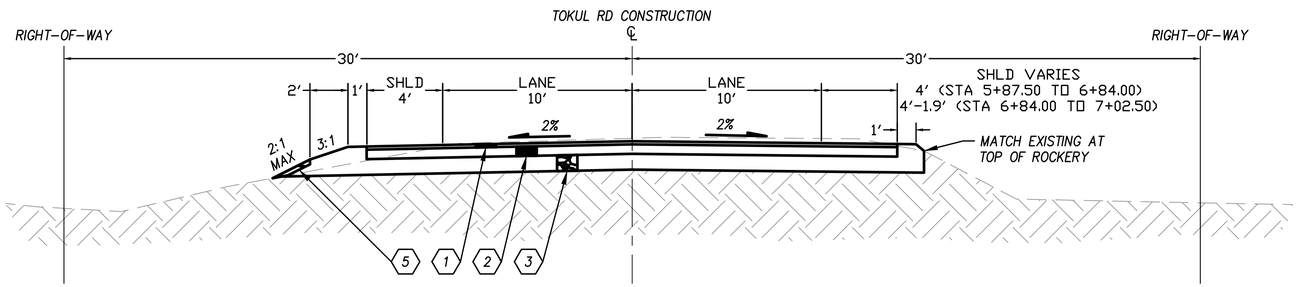

TYPICAL SECTION B

NOT TO SCALE

STA. 5+87.50 TO STA. 7+02.50

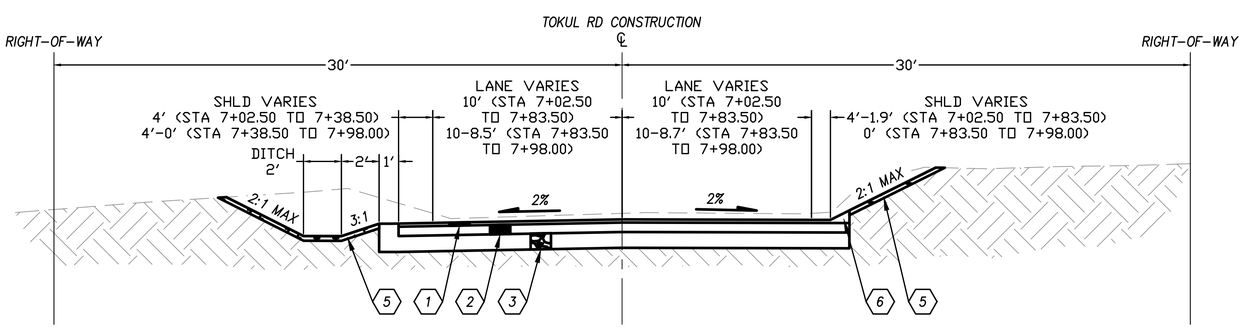

TYPICAL SECTION C

NOT TO SCALE

STA. 7+02.50 TO TO STA. 7+98.00

CONSTRUCTION NOTES

1. 2" HMA CLASS 1/2 IN. PG 58H-22 (WEARING COURSE)
2. 4" HMA CLASS 1/2 IN. PG 58H-22 (LEVELING COURSE)
3. 6" CSBC
4. GRAVEL BORROW
5. TURF MIX OF HYDROSEED OVER 3" TOPSOIL TYPE A
6. HMA THICKENED EDGE (DETAIL TO BE PROVIDED AT 90%)

GENERAL NOTES

1. SEE SHEET 6 FOR SITE PREPARATION PLAN.
2. SEE SHEETS 10-11 FOR ROADWAY PLAN AND PROFILE AND FOR SHOULDER TAPERS.
3. SEE SHEETS 19 AND28 FOR BRIDGE LAYOUT AND BRIDGE TYPICAL SECTION.

MERIDIAN
W.S.L.G.N.Z.
NAD 83/91

DATUM

N.G.V.D. 88

811

Know what's below.
Call before you dig.

SURVEY JOB NO:	19030	05/2019
CHECKED:	J. EVANS	08/2019
CAD ENTERED:	D. FOSTER	12/2020
DESIGNED:	R. KOESTER	12/2020
CHECKED:	S. SOISETH	12/2020
SUPERVISOR:	S. SOISETH	12/2020

NUM.	REVISION	BY	DATE

DAVID EVANS AND ASSOCIATES INC.

RENEE A. KOESTER STATE OF WASHINGTON 35594 REGISTERED PROFESSIONAL ENGINEER PRELIMINARY

FED. AID No. N/A

PROJECT No. 1135999

SURVEY No. TBD

MAINTENANCE DIVISION No. 2

JOANN H. KOSAKA STATE OF WASHINGTON 34413 REGISTERED PROFESSIONAL ENGINEER PRELIMINARY

60% DESIGN (NOT FOR CONSTRUCTION)

KING COUNTY DEPT. OF LOCAL SERVICES

JOHN TAYLOR, DIRECTOR

UPPER TOKUL CREEK BRIDGE #271B BRIDGE REPLACEMENT PROJECT

TYPICAL ROADWAY SECTIONS

King County

SHEET 3 OF 33 SHEETS

320-90 (XS01)

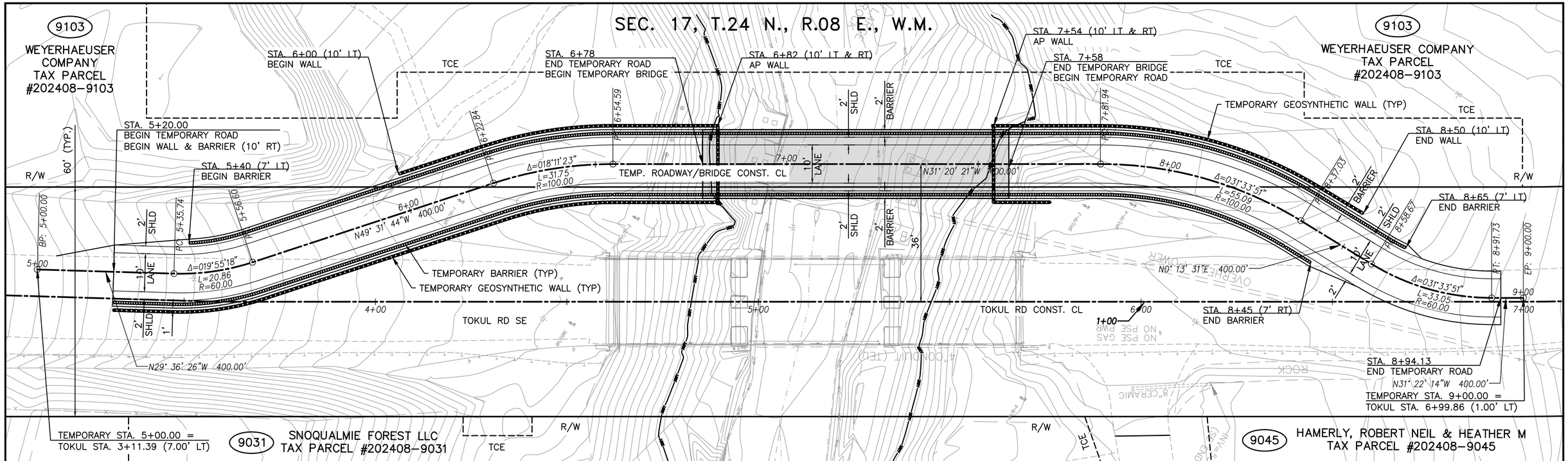

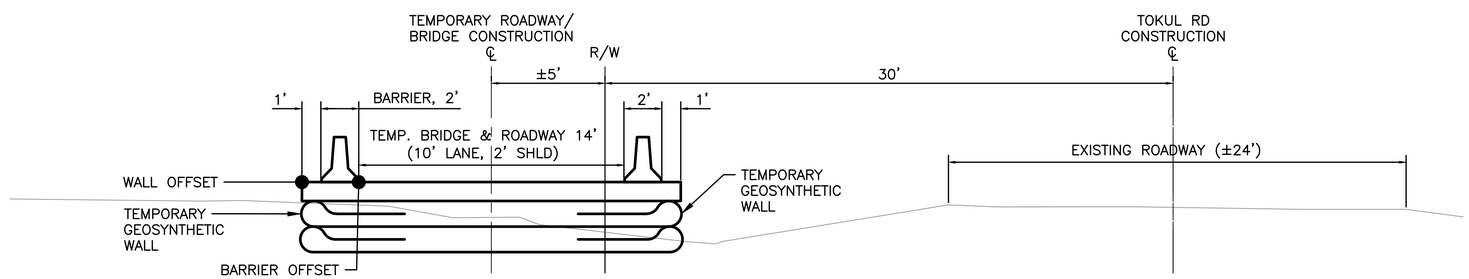

TEMPORARY ROADWAY SECTION (STA. ±6+50)

NOT TO SCALE

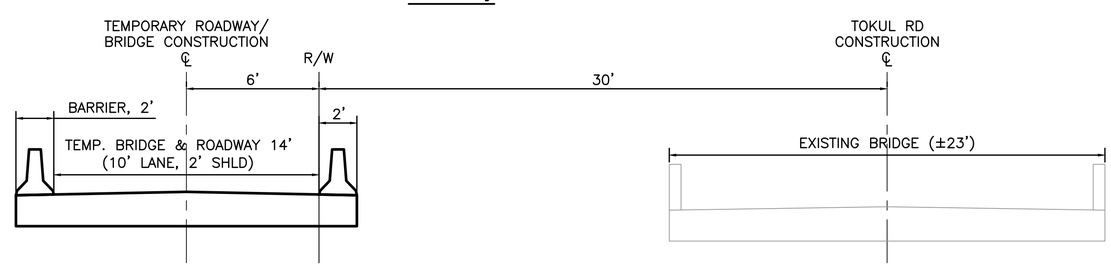

TEMPORARY BRIDGE SECTION (STA. ±7+25)

NOT TO SCALE

GENERAL NOTES

1. TEMPORARY ROADWAY ALIGNMENT AND PROFILE SHOWN PROVIDED FOR CONTRACTOR. TEMPORARY WALL LAYOUT IS FOR CONTRACTOR'S REFERENCE. CONTRACTOR MAY PROPOSE ALTERNATIVE FOR ENGINEER'S REVIEW. TEMPORARY WALL AND BRIDGE DESIGN SHALL BE COMPLETED BY THE CONTRACTOR AND SUBMITTED TO THE ENGINEER FOR APPROVAL PRIOR TO INSTALLATION.
2. BARRIER SHALL BE PRE-CAST CONCRETE BARRIER TYPE F PER WSDOT STD PLAN C-60.10-01.
3. TEMPORARY ROADWAY SECTION SHALL BE 4" HMA CLASS 1/2 IN. PG 58H-22 OVER 6" CSBC.
4. SEE SHEETS 8-9 FOR EROSION CONTROL PLAN AND DETAILS.
5. SEE SHEETS 14-17 FOR RESTORATION PLANS OF AREAS DISTURBED BY CONSTRUCTION OF THE NEW BRIDGE AND TEMPORARY ROADWAY.
6. SEE SHEETS 10-11 FOR PROPOSED ROADWAY PLAN AND PROFILE.

STAGING LEGEND

TEMPORARY WALL
TEMPORARY BRIDGE
TEMPORARY BARRIER

MERIDIAN
W.S.L.G.N.Z.
NAD 83/91
DATUM
N.G.V.D. 88

HORIZONTAL
20 10 0 20 40
SCALE IN FEET

811
Know what's below.
Call before you dig.

SURVEY JOB NO: 19030	05/2019	
CHECKED: J. EVANS	08/2019	
CAD ENTERED: D. FOSTER	12/2020	
DESIGNED: R. KOESTER	12/2020	
CHECKED: S. SOISETH	12/2020	
SUPERVISOR: S. SOISETH	12/2020	

NUM.	REVISION	BY	DATE

DAVID EVANS AND ASSOCIATES INC.

RENEE A. KOESTER, STATE OF WASHINGTON, REGISTERED PROFESSIONAL ENGINEER, 35594 — PRELIMINARY

FED. AID No. N/A
PROJECT No. 1135999
SURVEY No. TBD
MAINTENANCE DIVISION No. 2

JOANN H. KOSA, STATE OF WASHINGTON, REGISTERED PROFESSIONAL ENGINEER, 34413 — PRELIMINARY

60% DESIGN (NOT FOR CONSTRUCTION)

KING COUNTY DEPT. OF LOCAL SERVICES
JOHN TAYLOR, DIRECTOR

UPPER TOKUL CREEK BRIDGE #271B
BRIDGE REPLACEMENT PROJECT

DIVERSION ROADWAY PLAN AND PROFILE

King County

SHEET 4 OF 33 SHEETS

320-90 (SP01)

SEC. 17, T.24 N., R.08 E., W.M.

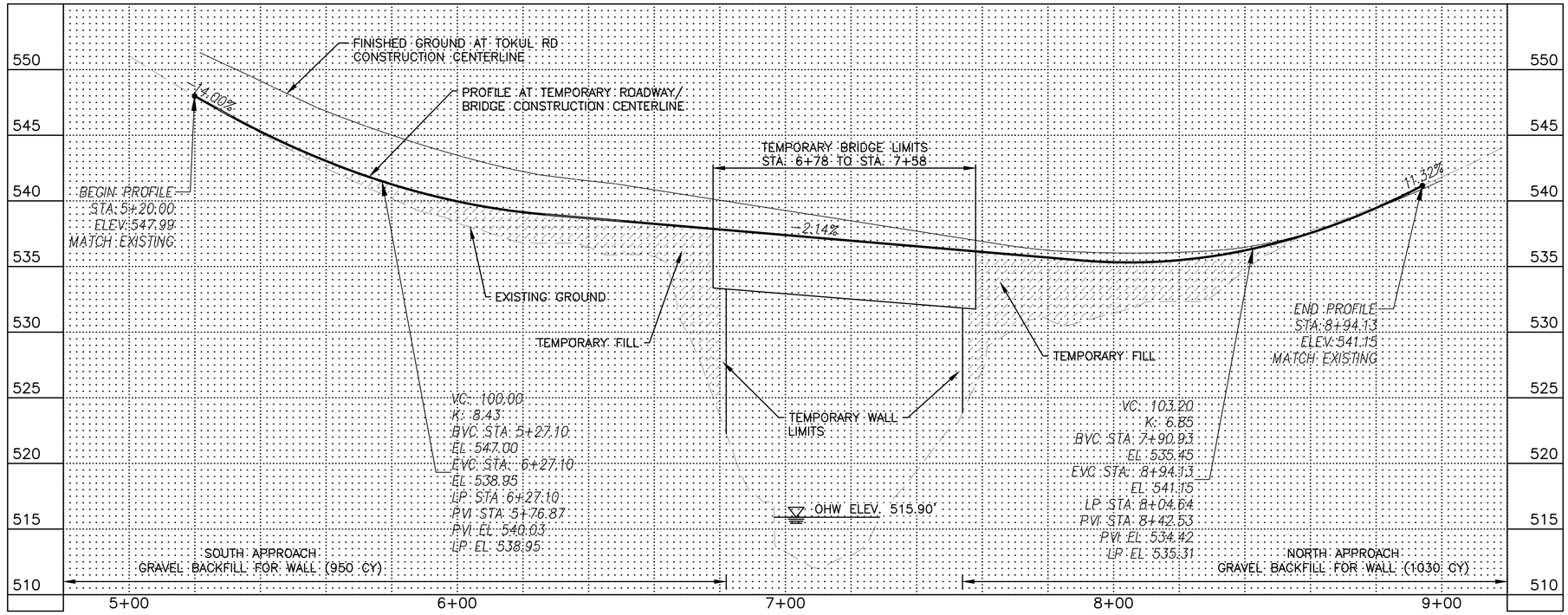

GENERAL NOTES

1. TEMPORARY ROADWAY ALIGNMENT AND PROFILE SHOWN PROVIDED FOR CONTRACTOR. TEMPORARY WALL LAYOUT IS FOR CONTRACTOR'S REFERENCE. CONTRACTOR MAY PROPOSE ALTERNATIVE FOR ENGINEER'S REVIEW. TEMPORARY WALL AND BRIDGE DESIGN SHALL BE COMPLETED BY THE CONTRACTOR AND SUBMITTED TO THE ENGINEER FOR APPROVAL PRIOR TO INSTALLATION.
2. SEE SHEET 4 FOR DIVERSION ROADWAY AND BRIDGE PLAN AND SECTIONS.

STAGING LEGEND

TEMPORARY FILL

HORIZONTAL
20 10 0 20 40
SCALE IN FEET

VERTICAL
5 2.5 0 5 10
SCALE IN FEET

MERIDIAN
W.S.L.G.N.Z.
NAD 83/91
DATUM
N.G.V.D. 88

811
Know what's below.
Call before you dig.

SURVEY JOB NO:	19030	05/2019
CHECKED:	J. EVANS	08/2019
CAD ENTERED:	D. FOSTER	12/2020
DESIGNED:	R. KOESTER	12/2020
CHECKED:	S. SOISETH	12/2020
SUPERVISOR:	S. SOISETH	12/2020

NUM.	REVISION	BY	DATE

DAVID EVANS AND ASSOCIATES INC.

RENEE A. KOESTER
STATE OF WASHINGTON
REGISTERED PROFESSIONAL ENGINEER
PRELIMINARY

FED. AID No. N/A
PROJECT No. 1135999
SURVEY No. TBD
MAINTENANCE DIVISION No. 2

JOANN H. KOSAKIANG
STATE OF WASHINGTON
REGISTERED PROFESSIONAL ENGINEER
PRELIMINARY

60% DESIGN (NOT FOR CONSTRUCTION)

KING COUNTY DEPT. OF LOCAL SERVICES
JOHN TAYLOR, DIRECTOR

UPPER TOKUL CREEK BRIDGE #271B
BRIDGE REPLACEMENT PROJECT

DIVERSION ROADWAY PLAN AND PROFILE

King County

SHEET 5 OF 33 SHEETS

320-90 (SP02)

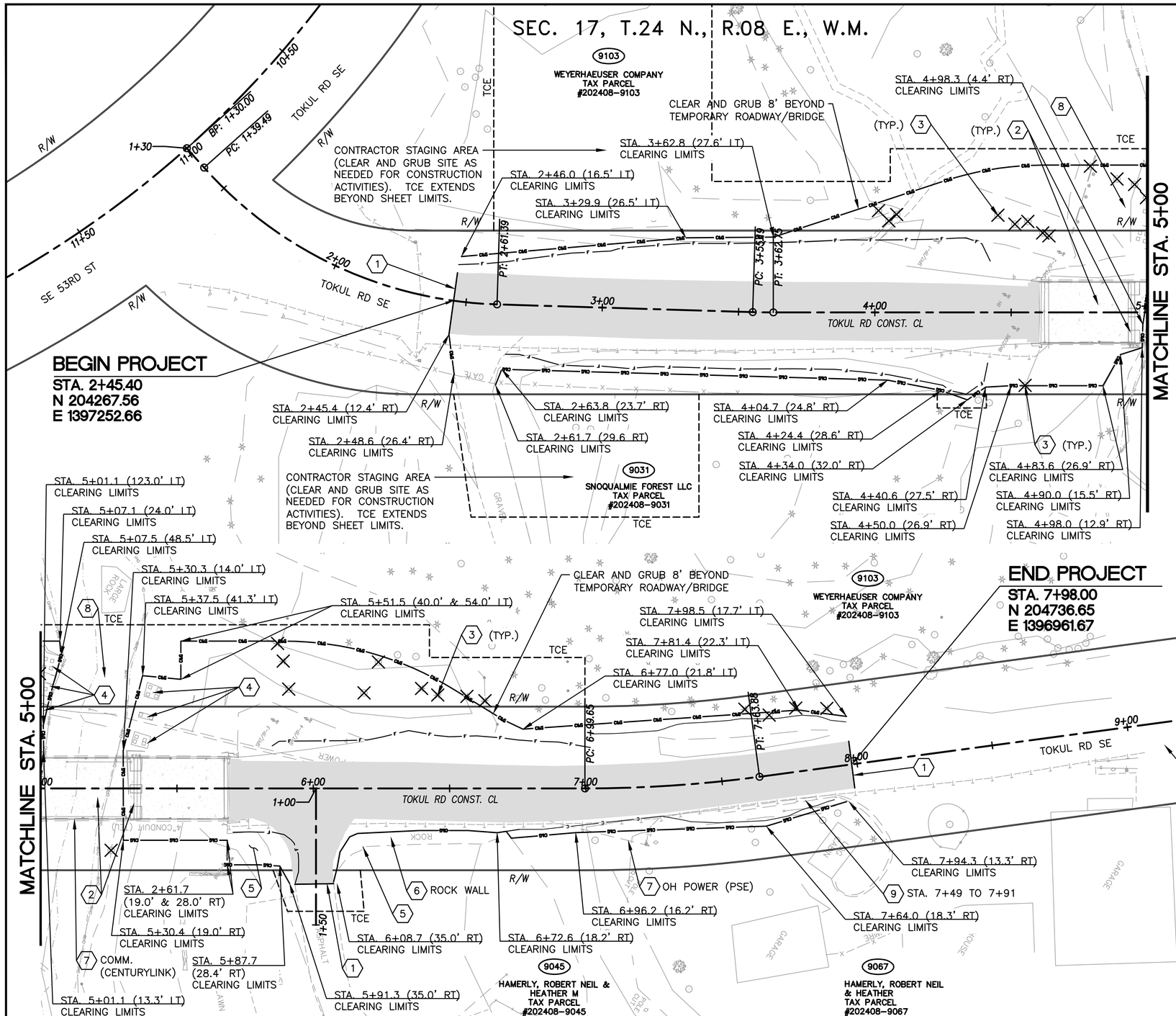

SITE PREP NOTES

1. SAWCUT AND REMOVE PAVEMENT
2. REMOVE EXISTING BRIDGE PIERS, FOUNDATIONS, AND ANCHORAGES
3. REMOVE EXISTING TREES, SEE SCHEDULE ON SHEET 7
4. REMOVE OLD BRIDGE FOUNDATIONS
5. PROTECT EXISTING STORM DRAIN CULVERT
6. PROTECT EXISTING FEATURE TO REMAIN
7. TEMPORARILY RELOCATE EXISTING UTILITIES FOR THE DURATION OF CONSTRUCTION (BY OTHERS)
8. INSTALL TEMPORARY BRIDGE. SEE SHEET 5 FOR TEMPORARY BRIDGE ALIGNMENT AND SECTION. TEMPORARY BRIDGE SHALL BE INSTALLED AND OPERATIONAL PRIOR TO DEMOLITION OF EXISTING BRIDGE.
9. REMOVE AND RESET LANDSCAPE TIMBERS

SITE PREP LEGEND

- CLEARING LIMITS
- CUT (PERMANENT)
- FILL (PERMANENT)
- SAWCUT
- TCE LINE
- ORDINARY HIGH WATER
- TREE REMOVAL
- ASPHALT PAVEMENT REMOVAL
- BRIDGE ABUTMENT AND BRIDGE REMOVAL

GENERAL NOTES

1. CONTRACTOR SHALL KEEP ALL CONSTRUCTION ACTIVITIES OUTSIDE OF THE TOKUL CREEK AND THE ORDINARY HIGH WATER LIMITS UNLESS STATED ON PLANS.
2. CONTRACTOR SHALL PROTECT ALL TREES NEAR WORK ACTIVITIES THAT ARE TO REMAIN.
3. SEE SHEET 3 FOR TYPICAL ROADWAY SECTIONS.
4. SEE SHEETS 8–9 FOR EROSION CONTROL PLAN AND DETAILS.
5. SEE SHEETS 10–11 FOR ROADWAY PLAN AND PROFILE.
6. SEE SHEETS 19–28 FOR BRIDGE LAYOUT, AND TYPICAL SECTION.

MERIDIAN
W.S.L.G.N.Z.
NAD 83/91

DATUM

N.G.V.D. 88

20 10 0 20 40
SCALE IN FEET

811
Know what's below.
Call before you dig.

SURVEY JOB NO:	19030	05/2019
CHECKED:	J. EVANS	08/2019
CAD ENTERED:	D. FOSTER	12/2020
DESIGNED:	R. KOESTER	12/2020
CHECKED:	S. SOISETH	12/2020
SUPERVISOR:	S. SOISETH	12/2020

NUM.	REVISION	BY	DATE

DAVID EVANS AND ASSOCIATES INC.

RENEE A. KOESTER — STATE OF WASHINGTON — 45594 — REGISTERED PROFESSIONAL ENGINEER — PRELIMINARY

FED. AID No. N/A

PROJECT No. 1135999

SURVEY No. TBD

MAINTENANCE DIVISION No. 2

JOANN H. KOSAKA — STATE OF WASHINGTON — 34413 — REGISTERED PROFESSIONAL ENGINEER — PRELIMINARY

60% DESIGN (NOT FOR CONSTRUCTION)

KING COUNTY DEPT. OF LOCAL SERVICES
JOHN TAYLOR, DIRECTOR

UPPER TOKUL CREEK BRIDGE #271B BRIDGE REPLACEMENT PROJECT

SITE PREPARATION PLAN

King County

SHEET 6 OF 33 SHEETS

320-90 (SP03)

SEC. 17, T.24 N., R.08 E., W.M.

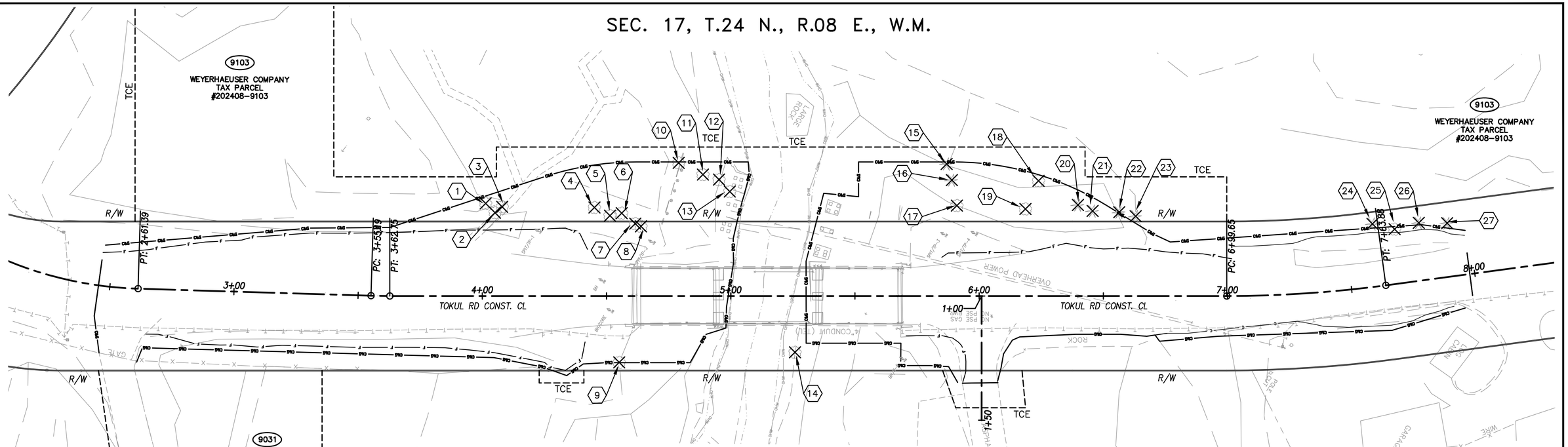

TREE REMOVAL SCHEDULE

TREE NO.	BOTANICAL NAME	COMMON NAME	CALIPER SIZE	DISTANCE FROM OHWM (APPROX.)	TREE POINT NO.
1	ALNUS RUBRA	RED ALDER	6"	103'	1682
2	ALNUS RUBRA	RED ALDER	6"	99'	1684
3	ALNUS RUBRA	RED ALDER	12"	96'	1688
4	ACER MACROPHYLLUM	BIG LEAF MAPLE	24"	59'	1762
5	ACER MACROPHYLLUM	BIG LEAF MAPLE	20"	52'	1761
6	ALNUS RUBRA	RED ALDER	12"	48'	1760
7	ALNUS RUBRA	RED ALDER	16"	42'	1759
8	ALNUS RUBRA	RED ALDER	16"	39'	1758
9	ALNUS RUBRA	RED ALDER	12"	41'	3061
10	ALNUS RUBRA	RED ALDER	16"	29'	1747
11	ALNUS RUBRA	RED ALDER	16"	20'	1780
12	ACER MACROPHYLLUM	BIG LEAF MAPLE	24"	13'	1781
13	ALNUS RUBRA	RED ALDER	10"	7'	1818
14	ACER MACROPHYLLUM	BIG LEAF MAPLE	16"	5'	3058
15	THUJA PLICATA	WESTERN RED CEDAR	16"	50'	2049
16	THUJA PLICATA	WESTERN RED CEDAR	6"	54'	2048
17	PRUNUS SP.	CHERRY	12"	59'	1991
18	ALNUS RUBRA	RED ALDER	12"	87'	2077
19	PRUNUS SP.	CHERRY	14"	88'	2078
20	PSEUDOTSUGA MENZIESII	DOUGLAS FIR	18"	108'	2081
21	PSEUDOTSUGA MENZIESII	DOUGLAS FIR	12"	114'	2082
22	PSEUDOTSUGA MENZIESII	DOUGLAS FIR	14"	125'	2088
23	PSEUDOTSUGA MENZIESII	DOUGLAS FIR	18"	131'	2085
24	PSEUDOTSUGA MENZIESII	DOUGLAS FIR	16"	228'	2196
25	ACER MACROPHYLLUM	BIG LEAF MAPLE	8"	238'	2195
26	PSEUDOTSUGA MENZIESII	DOUGLAS FIR	16"	248'	2193
27	PSEUDOTSUGA MENZIESII	DOUGLAS FIR	6"	259'	2207

MERIDIAN
W.S.L.G.N.Z.
NAD 83/91

DATUM

N.G.V.D. 88

20 10 0 20 40
SCALE IN FEET

811
Know what's below.
Call before you dig.

SURVEY JOB NO:	19030	05/2019
CHECKED:	J. EVANS	08/2019
CAD ENTERED:	D. FOSTER	12/2020
DESIGNED:	R. KOESTER	12/2020
CHECKED:	S. SOISETH	12/2020
SUPERVISOR:	S. SOISETH	12/2020

NUM.	REVISION	BY	DATE

DAVID EVANS AND ASSOCIATES INC.

RENE A. KOESTER
STATE OF WASHINGTON
36594
REGISTERED PROFESSIONAL ENGINEER
PRELIMINARY

FED. AID No. N/A

PROJECT No. 1135999

SURVEY No. TBD

MAINTENANCE DIVISION No. 2

JOANN H. KOSA
STATE OF WASHINGTON
34413
REGISTERED PROFESSIONAL ENGINEER
PRELIMINARY

60% DESIGN (NOT FOR CONSTRUCTION)

KING COUNTY DEPT. OF LOCAL SERVICES
JOHN TAYLOR, DIRECTOR

UPPER TOKUL CREEK BRIDGE #271B BRIDGE REPLACEMENT PROJECT

TREE SCHEDULE

King County

SHEET 7 OF 33 SHEETS

320-90 (SP04)

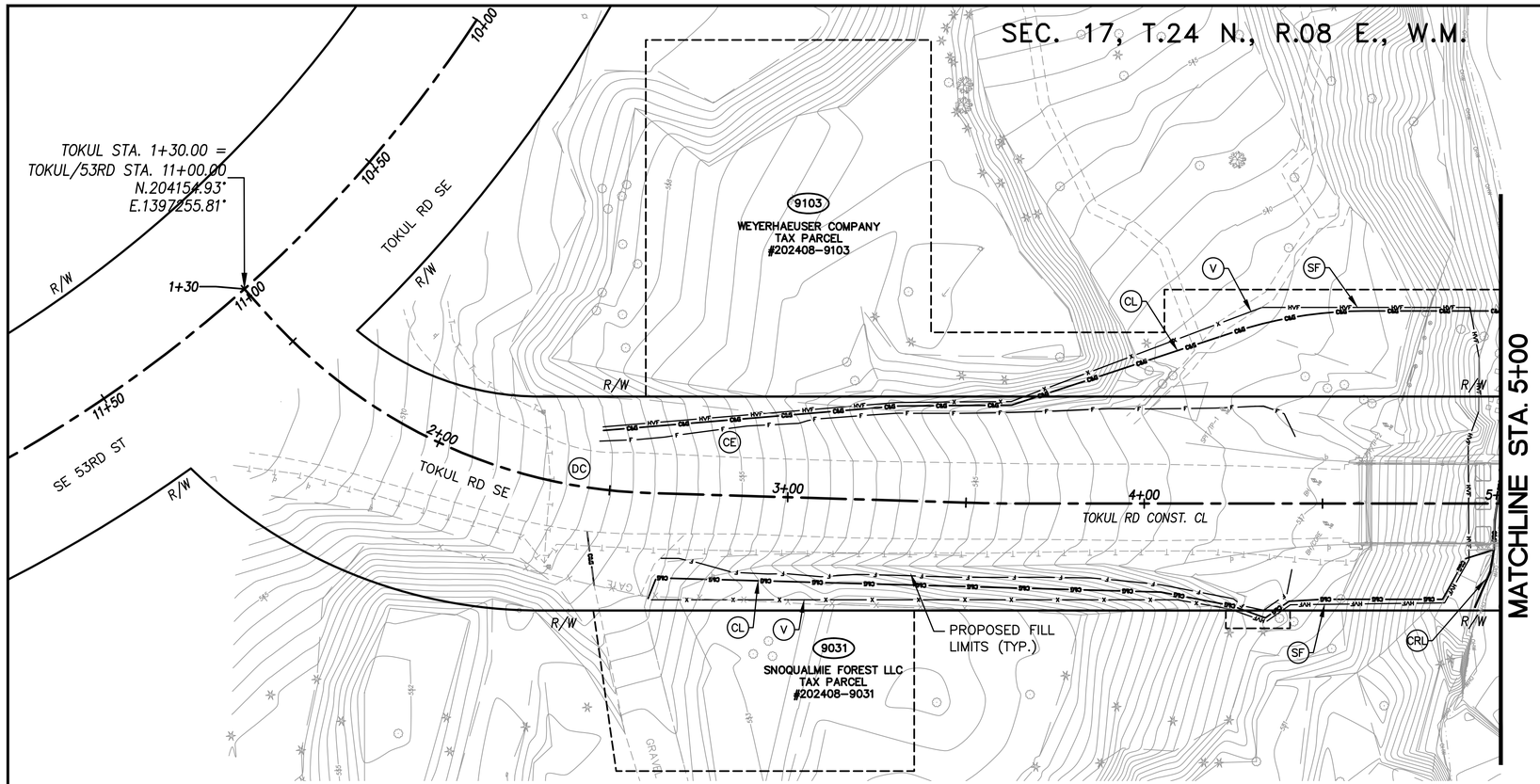

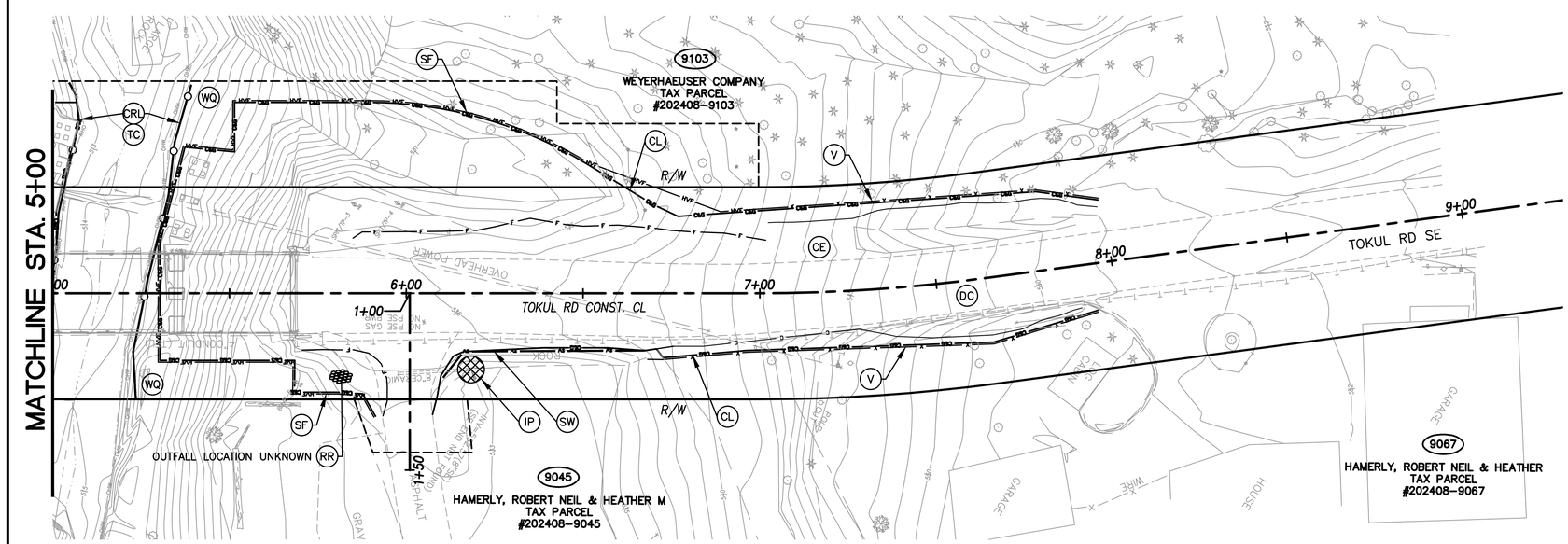

EROSION CONTROL SYMBOLS

- (CE) TEMPORARY STABILIZED CONSTRUCTION ENTRANCE PER KING COUNTY 2016 SWDM FIGURE C.3.1.A AND WSDOT STD PLAN I-80.10-02
- (CL) CLEARING LIMIT
- (CRL) COIR LOG PER WSDOT STD PLAN I-30.60-02
- (DC) DUST CONTROL MEASURES
- (IP) CATCH BASIN AND CULVERT/ INLET PROTECTION PER WSDOT STD PLAN I-40.10-00
- (RR) QUARRY SPALL OUTLET PROTECTION PER KING COUNTY 2016 SWDM APPENDIX D SECTION D.2.1.6.5
- (SF) HIGH VISIBILITY SILT FENCE PER WSDOT STD PLAN I-30.17-01
- (SW) TRAW WATTLE PER WSDOT STD PLAN I-30.30-01
- (TC) TURBIDITY CURTAIN PER DETAIL ON SHEET 9
- (V) HIGH VISIBILITY FENCE PER WSDOT STD PLAN I-10.11-01
- (WQ) WATER QUALITY SAMPLING LOCATION

EROSION CONTROL LEGEND

- HVF — HIGH VISIBILITY SILT FENCE
- x — HIGH VISIBILITY FENCE
- SW — STRAW WATTLE
- COIR LOG
- c — CUT (PERMANENT)
- f — FILL (PERMANENT)
- TCE LINE
- OHW — ORDINARY HIGH WATER

GENERAL NOTES

1. SEE SHEET 9 FOR EROSION CONTROL DETAILS AND NOTES.
2. SEE SHEET 6 FOR SITE PREPARATION PLAN. CONTRACTOR SHALL PROTECT ALL TREES NEAR WORK ACTIVITIES THAT ARE TO REMAIN. SEE SITE PREPARATION PLAN FOR TREE REMOVALS.
3. SEE SHEETS 4-5 FOR DIVERSION ROADWAY PLAN AND PROFILE.
4. SEE SHEETS 14-17 FOR RESTORATION PLANS.
5. CONTRACTOR SHALL KEEP ALL CONSTRUCTION ACTIVITIES OUTSIDE OF THE TOKUL CREEK AND THE ORDINARY HIGH WATER LIMITS UNLESS STATED ON PLANS.

MERIDIAN
W.S.L.G.N.Z.
NAD 83/91
DATUM
N.G.V.D. 88

20 10 0 20 40
SCALE IN FEET

811
Know what's below.
Call before you dig.

SURVEY JOB NO: 19030	05/2019			
CHECKED: J. EVANS	08/2019			
CAD ENTERED: D. FOSTER	12/2020			
DESIGNED: R. KOESTER	12/2020			
CHECKED: S. SOISETH	12/2020			
SUPERVISOR: S. SOISETH	12/2020			
		NUM. REVISION	BY	DATE

DAVID EVANS AND ASSOCIATES INC.

RENEE A. KOESTER — STATE OF WASHINGTON — REGISTERED PROFESSIONAL ENGINEER — PRELIMINARY

FED. AID No. N/A
PROJECT No. 1135999
SURVEY No. TBD
MAINTENANCE DIVISION No. 2

JOANN H. KOSA — STATE OF WASHINGTON — REGISTERED PROFESSIONAL ENGINEER — PRELIMINARY

60% DESIGN (NOT FOR CONSTRUCTION)

KING COUNTY DEPT. OF LOCAL SERVICES
JOHN TAYLOR, DIRECTOR

UPPER TOKUL CREEK BRIDGE #271B BRIDGE REPLACEMENT PROJECT

EROSION CONTROL PLAN

King County

SHEET 8 OF 33 SHEETS

320-90 (EC01)

EROSION CONTROL NOTES

1. CONSTRUCTION SEQUENCE TO BE APPROVED:
   A. CONDUCT PRE–CONSTRUCTION MEETING.
   B. FLAG OR FENCE CLEARING LIMITS.
   C. POST SIGN WITH NAME AND PHONE NUMBER OF TESC SUPERVISOR.
   D. INSTALL CATCH BASIN PROTECTION IF REQUIRED.
   E. INSTALL PERIMETER PROTECTION, SILT FENCE, BRUSH BARRIER, ETC.
   F. MAINTAIN TESC MEASURES IN ACCORDANCE WITH KING COUNTY 2016 SURFACE WATER DESIGN MANUAL AND MANUFACTURER'S RECOMMENDATIONS.
   G. RELOCATE TESC MEASURES OR INSTALL NEW MEASURES SO THAT AS SITE CONDITIONS CHANGE, THE TESC IS ALWAYS IN ACCORDANCE WITH WSDOT TESC MINIMUM REQUIREMENTS.
   H. STABILIZE ALL AREAS THAT REACH FINAL GRADE WITHIN 7 DAYS.
   I. SEED OR SOD ANY AREAS TO REMAIN UNWORKED FOR MORE THAN 30 DAYS.
   J. UPON COMPLETION OF THE PROJECT, ALL DISTURBED AREAS MUST BE STABILIZED AND BEST MANAGEMENT PRACTICES REMOVED IF APPROPRIATE.

2. THE LOCATION AND USE OF TESC BMP'S IS FOR REFERENCE ONLY. THE IMPLEMENTATION OF THIS TESC PLAN AND THE CONSTRUCTION, MAINTENANCE, REPLACEMENT, AND UPGRADING OF THESE TESC FACILITIES IS THE RESPONSIBILITY OF THE PERMITTEE/CONTRACTOR UNTIL ALL CONSTRUCTION IS APPROVED.

3. THE TESC FACILITIES SHOWN ON THIS PLAN MUST BE CONSTRUCTED PRIOR TO OR IN CONJUNCTION WITH ALL CLEARING AND GRADING ACTIVITIES IN SUCH A MANNER AS TO ENSURE THAT SEDIMENT–LADEN WATER DOES NOT ENTER TOKUL CREEK OR VIOLATE APPLICABLE WATER STANDARDS. WHEREVER POSSIBLE, MAINTAIN NATURAL VEGETATION FOR SILT CONTROL.

4. THE TESC FACILITIES SHOWN ON THIS PLAN ARE THE MINIMUM REQUIREMENTS FOR ANTICIPATED SITE CONDITIONS. DURING THE CONSTRUCTION PERIOD, THESE TESC FACILITIES SHALL BE UPGRADED, FOR EXAMPLE, ADDITIONAL SUMPS, RELOCATION OF DITCHES AND SILT FENCES, ETC, AS NEEDED FOR UNEXPECTED STORM EVENTS. ADDITIONALLY, MORE TESC FACILITIES MAY BE REQUIRED TO ENSURE COMPLETE SILTATION CONTROL. THEREFORE, DURING THE COURSE OF CONSTRUCTION IT SHALL BE THE OBLIGATION AND RESPONSIBILITIES OF THE CONTRACTOR TO ADDRESS ANY NEW CONDITIONS THAT MAY BE CREATED BY HIS ACTIVITIES AND TO PROVIDE ADDITIONAL FACILITIES OVER AND ABOVE THE MINIMUM REQUIREMENTS AS MAY BE NEEDED.

5. THE TESC FACILITIES TO BE INSPECTED BY THE CONTRACTOR IN ACCORDANCE WITH THE CONSTRUCTION STORMWATER GENERAL PERMIT AND MAINTAINED AS NECESSARY TO ENSURE THEIR CONTINUED FUNCTIONING. IN ADDITION, ALL TEMPORARY EROSION CONTROLS TO BE MAINTAINED IN A SATISFACTORY CONDITION UNTIL SUCH TIME THAT CLEARING AND/OR CONSTRUCTION IS COMPLETED. PERMANENT DRAINAGE FACILITIES ARE OPERATIONAL, AND THE POTENTIAL FOR EROSION HAS PASSED. WRITTEN RECORDS TO BE KEPT DOCUMENTING THE REVIEWS OF THE TESC FACILITIES.

6. THE TESC FACILITIES ON INACTIVE SITES TO BE INSPECTED AND MAINTAINED A MINIMUM OF ONCE A MONTH OR WITHIN 48 HOURS FOLLOWING A STORM EVENT.

7. ALL DENUDED SOILS MUST BE STABILIZED WITH AN APPROVED TESC METHOD, FOR EXAMPLE, SEEDING, MULCHING, PLASTIC COVERING, CRUSHED ROCK, WITH THE FOLLOW TIMELINES:
   - MAY 1 TO SEPTEMBER 30 – SOILS MUST BE STABILIZED WITHIN 7 DAYS OF GRADING.
   - OCTOBER 1 TO APRIL 30 – SOILS MUST BE STABILIZED WITHIN 2 DAYS OF GRADING.
   - STABILIZE SOILS AT THE END OF THE WORKDAY PRIOR TO A WEEKEND, HOLIDAY, OR PREDICTED RAIN EVENT.

8. A COPY OF THE TESC PLANS MUST BE ON THE JOB SITE WHENEVER CONSTRUCTION IS IN PROGRESS.

9. IF ANY PART(S) OF THE CLEARING LIMIT BOUNDARY OR TEMPORARY EROSION/SEDIMENTATION CONTROL PLAN IS/ARE DAMAGED, IT IS TO BE REPAIRED IMMEDIATELY.

10. ALL PROPERTIES ADJACENT TO THE PROJECT SITE TO BE PROTECTED FROM SEDIMENT DEPOSITION AND RUNOFF.

11. PRIOR TO OCTOBER 1 OF EACH YEAR, AT THE BEGINNING OF THE WET SEASON, ALL DISTURBED AREAS TO BE REVIEWED TO IDENTIFY WHICH ONES CAN BE SEEDED IN PREPARATION FOR THE WINTER RAINS. THE IDENTIFIED DISTURBED AREA TO BE SEEDED WITHIN ONE WEEK AFTER OCTOBER 1. A SITE PLAN DEPICTING THE AREAS TO BE SEEDED AND THE AREAS TO REMAIN UNCOVERED WILL BE SUBMITTED TO THE ENGINEER. THE ENGINEER CAN REQUIRE SEEDING OF ADDITIONAL AREAS IN ORDER TO PROTECT SURFACE WATERS, ADJACENT PROPERTIES, OR DRAINAGE FACILITIES.

12. DURING THE WET SEASON, OCTOBER 1 – APRIL 30, CONTRACTOR SHALL:
   - PROTECT STOCK PILES AND STEEP CUT AND FILL SLOPES IF UNWORKED FOR MORE THAN 12 HOURS.
   - STOCKPILE COVER MATERIAL SUFFICIENT TO COVER ALL DISTURBED AREAS ON SITE.
   - STOCKPILE FIFTY LINEAR FEET OF SILT FENCE PER ACRE OF DISTURBANCE ON SITE.
   - INCREASE THE FREQUENCY OF MAINTENANCE REVIEW FROM MONTHLY TO WEEKLY.

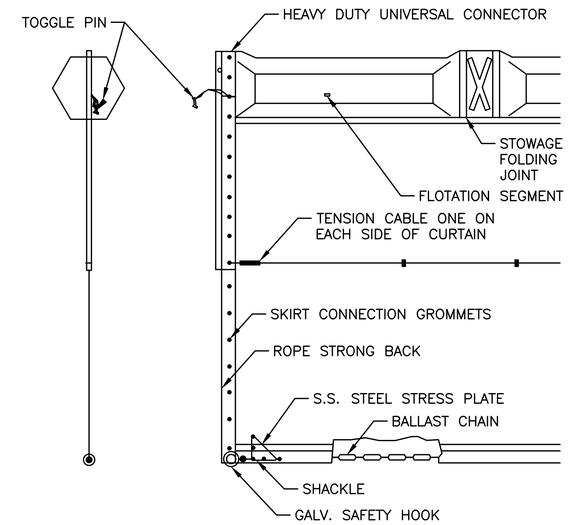

TURBIDITY CURTAIN (1)

NOT TO SCALE

MERIDIAN
W.S.L.G.N.Z.
NAD 83/91

DATUM

N.G.V.D. 88

811

Know what's below.
Call before you dig.

SURVEY JOB NO:	19030	05/2019
CHECKED:	J. EVANS	08/2019
CAD ENTERED:	D. FOSTER	12/2020
DESIGNED:	R. KOESTER	12/2020
CHECKED:	S. SOISETH	12/2020
SUPERVISOR:	S. SOISETH	12/2020

NUM.	REVISION	BY	DATE

DAVID EVANS AND ASSOCIATES INC.

RENEE A. KOESTER — STATE OF WASHINGTON — 35594 — REGISTERED PROFESSIONAL ENGINEER — PRELIMINARY

FED. AID No. N/A

PROJECT No. 1135999

SURVEY No. TBD

MAINTENANCE DIVISION No. 2

JOANN H. KOSA — STATE OF WASHINGTON — 34413 — REGISTERED PROFESSIONAL ENGINEER — PRELIMINARY

60% DESIGN (NOT FOR CONSTRUCTION)

KING COUNTY DEPT. OF LOCAL SERVICES
JOHN TAYLOR, DIRECTOR

UPPER TOKUL CREEK BRIDGE #271B
BRIDGE REPLACEMENT PROJECT

EROSION CONTROL DETAILS AND NOTES

King County

SHEET 9 OF 33 SHEETS

320-90 (EC02)

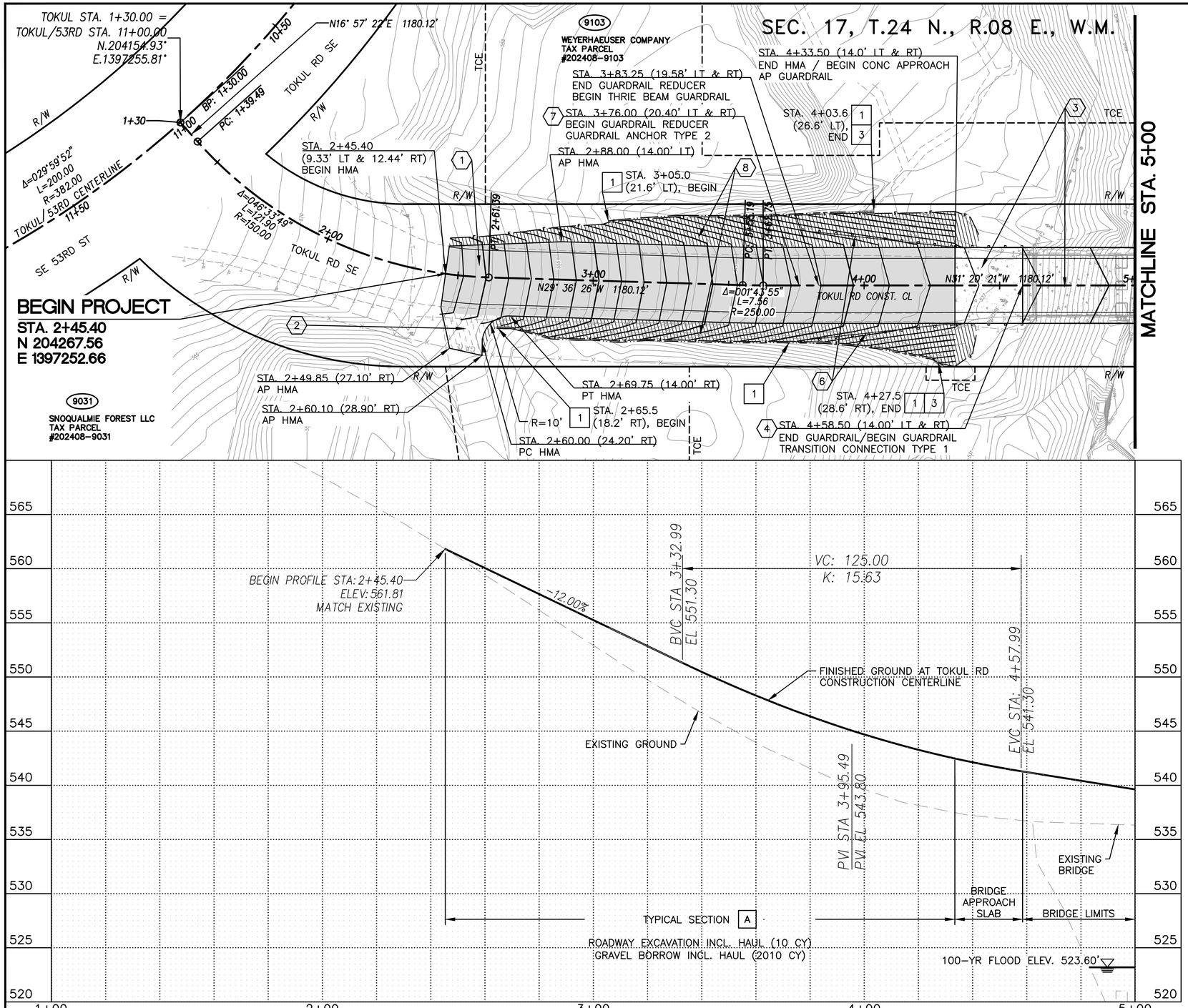

ROADWAY NOTES

1. CONSTRUCT FULL DEPTH HMA PAVEMENT
2. CONSTRUCT HMA PAVEMENT FOR DRIVEWAY PER SHEET 12.
3. INSTALL BRIDGE AND CONCRETE APPROACH SLAB PER SHEET 19.
4. INSTALL GUARDRAIL TRANSITION CONNECTION TYPE 1 PER DETAIL (TO BE PROVIDED AT 90%) AND CONNECT TO BRIDGE RAILING.
5. INSTALL THRIE BEAM GUARDRAIL REDUCER SECTION TYPE B AND BEAM GUARDRAIL (THRIE BEAM) WITH DESIGN C END SECTION PER WSDOT STD PLANS C-1D & C-7A.
6. INSTALL BEAM GUARDRAIL (THRIE BEAM) WITH DESIGN G END SECTION PER WSDOT STD PLANS C-1D & C-7A.
7. INSTALL THRIE BEAM GUARDRAIL REDUCER SECTION TYPE B AND ANCHOR TYPE 2 PER WSDOT STD PLANS C-1D AND C-6A.
8. RESTORE LANDSCAPING AREA PER SHEET 14.
9. INSTALL HMA THICKENED EDGE

DRAINAGE NOTES

1. GRADE MINIMUM 9-INCH DEPTH V-DITCH WITH 2:1 SIDESLOPES
2. GRADE 2' WIDE BY MINIMUM 9-INCH DEPTH DITCH WITH 2:1 MAXIMUM SIDESLOPES
3. CONSTRUCT 3 FT WIDE X 3 FT LENGTH X 0.5 FT DEPTH QUARRY SPALL PAD
3. MAINTAIN EXISTING DITCH

LEGEND

- 6" HMA CLASS 1/2 IN. PG 58H-22
- 4" HMA CLASS 1/2 IN. PG 58H-22
- CONCRETE BRIDGE/APPROACH SLAB
- LANDSCAPING AREA
- QUARRY SPALL PAD
- DITCH
- GUARDRAIL

GENERAL NOTES

1. SEE SHEET 3 FOR TYPICAL ROADWAY SECTIONS.
2. SEE SHEET 13 FOR SIGINING PLAN.
3. SEE SHEET 19 FOR BRIDGE LAYOUT.
4. SEE SHEETS 4-5 AND 18 FOR DIVERSION ROADWAY PLAN AND PROFILE AND DIVERSION TEMPORARY TRAFFIC CONTROL AND SIGNAL PLAN.

MERIDIAN
W.S.L.G.N.Z.
NAD 83/91

DATUM

N.G.V.D. 88

HORIZONTAL 20 10 0 20 40 SCALE IN FEET

VERTICAL 5 2.5 0 5 10 SCALE IN FEET

811 Know what's below. Call before you dig.

SURVEY JOB NO:	19030	05/2019
CHECKED:	J. EVANS	08/2019
CAD ENTERED:	D. FOSTER	12/2020
DESIGNED:	R. KOESTER	12/2020
CHECKED:	S. SOISETH	12/2020
SUPERVISOR:	S. SOISETH	12/2020

NUM.	REVISION	BY	DATE

DAVID EVANS AND ASSOCIATES INC.

RENNIE A. KOESTER STATE OF WASHINGTON 35594 REGISTERED PROFESSIONAL ENGINEER PRELIMINARY

FED. AID No. N/A

PROJECT No. 1135999

SURVEY No. TBD

MAINTENANCE DIVISION No. 2

JOANN H. KOSA STATE OF WASHINGTON 34413 REGISTERED PROFESSIONAL ENGINEER PRELIMINARY

60% DESIGN (NOT FOR CONSTRUCTION)

KING COUNTY DEPT. OF LOCAL SERVICES

JOHN TAYLOR, DIRECTOR

UPPER TOKUL CREEK BRIDGE #271B BRIDGE REPLACEMENT PROJECT

ROADWAY PLAN AND PROFILE

King County

SHEET 10 OF 33 SHEETS

320-90 (RD01)

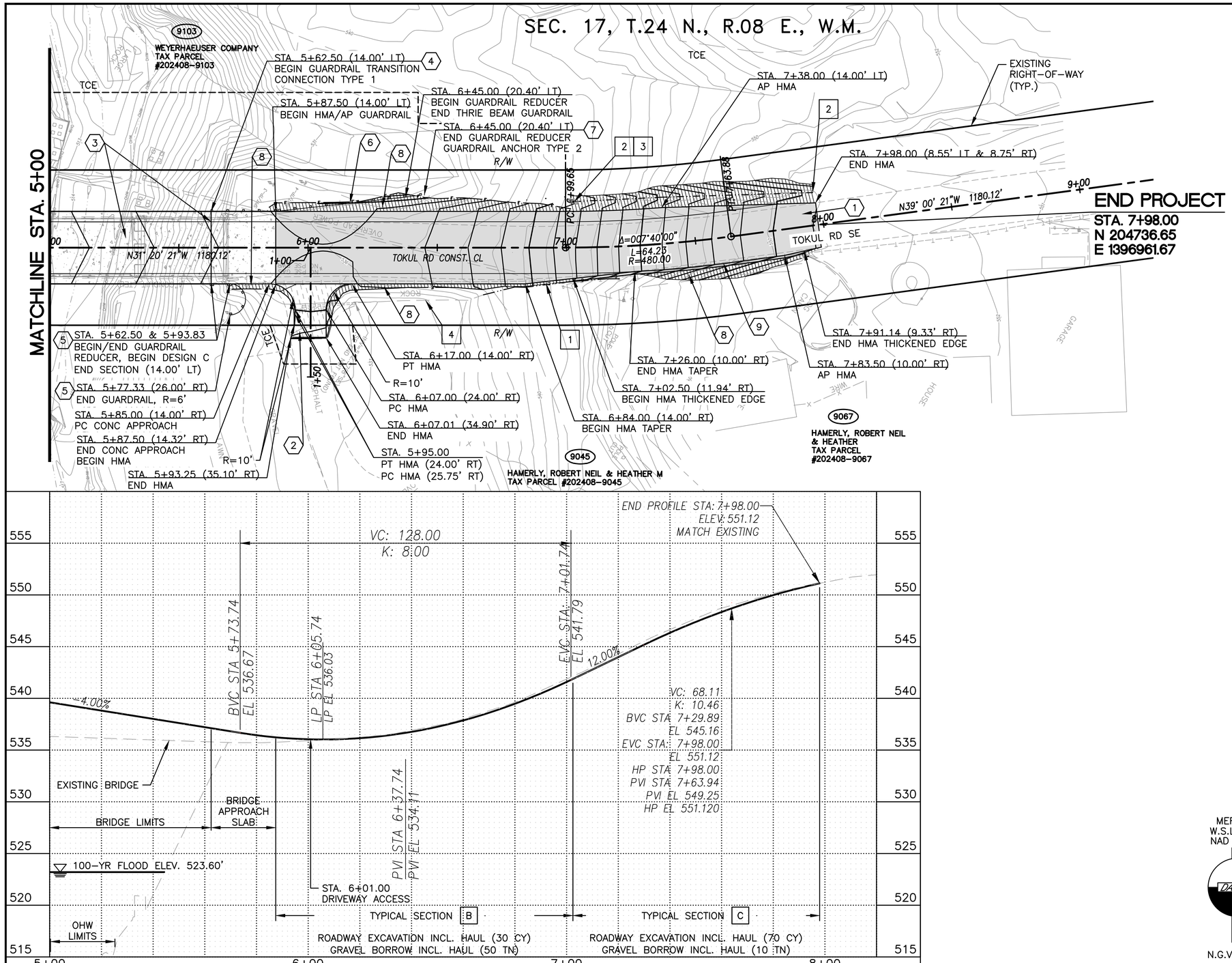

ROADWAY NOTES

1. CONSTRUCT FULL DEPTH HMA PAVEMENT
2. CONSTRUCT HMA PAVEMENT FOR DRIVEWAY PER SHEET 12.
3. INSTALL BRIDGE AND CONCRETE APPROACH SLAB PER SHEET 19.
4. INSTALL GUARDRAIL TRANSITION CONNECTION TYPE 1 PER DETAIL (TO BE PROVIDED AT 90%) AND CONNECT TO BRIDGE RAILING.
5. INSTALL THRIE BEAM GUARDRAIL REDUCER SECTION TYPE B AND BEAM GUARDRAIL (THRIE BEAM) WITH DESIGN C END SECTION PER WSDOT STD PLANS C-1D & C-7A.
6. INSTALL BEAM GUARDRAIL (THRIE BEAM) WITH DESIGN G END SECTION PER WSDOT STD PLANS C-1D & C-7A.
7. INSTALL THRIE BEAM GUARDRAIL REDUCER SECTION TYPE B AND ANCHOR TYPE 2 PER WSDOT STD PLANS C-1D AND C-6A.
8. RESTORE LANDSCAPING AREA PER SHEET 14.
9. INSTALL HMA THICKENED EDGE

DRAINAGE NOTES

1. GRADE MINIMUM 9-INCH DEPTH V-DITCH WITH 2:1 SIDESLOPES
2. GRADE 2' WIDE BY MINIMUM 9-INCH DEPTH DITCH WITH 2:1 MAXIMUM SIDESLOPES
3. CONSTRUCT 3 FT WIDE X 3 FT LENGTH X 0.5 FT DEPTH QUARRY SPALL PAD

3 MAINTAIN EXISTING DITCH

LEGEND

- 6" HMA CLASS 1/2 IN. PG 58H-22
- 4" HMA CLASS 1/2 IN. PG 58H-22
- CONCRETE BRIDGE/APPROACH SLAB
- LANDSCAPING AREA
- QUARRY SPALL PAD
- DITCH
- GUARDRAIL

GENERAL NOTES

1. SEE SHEET 3 FOR TYPICAL ROADWAY SECTIONS.
2. SEE SHEET 13 FOR SIGINING PLAN.
3. SEE SHEET 19 FOR BRIDGE LAYOUT.
4. SEE SHEETS 4-5 AND 18 FOR DIVERSION ROADWAY PLAN AND PROFILE AND DIVERSION TEMPORARY TRAFFIC CONTROL AND SIGNAL PLAN.

MERIDIAN
W.S.L.G.N.Z.
NAD 83/91
DATUM
N.G.V.D. 88

HORIZONTAL 20 10 0 20 40 SCALE IN FEET
VERTICAL 5 2.5 0 5 10 SCALE IN FEET

811 Know what's below. Call before you dig.

SURVEY JOB NO:	19030	05/2019
CHECKED:	J. EVANS	08/2019
CAD ENTERED:	D. FOSTER	12/2020
DESIGNED:	R. KOESTER	12/2020
CHECKED:	S. SOISETH	12/2020
SUPERVISOR:	S. SOISETH	12/2020

NUM.	REVISION	BY	DATE

DAVID EVANS AND ASSOCIATES INC.

RENEE A. KOESTER STATE OF WASHINGTON 35594 REGISTERED PROFESSIONAL ENGINEER PRELIMINARY

FED. AID No. N/A
PROJECT No. 1135999
SURVEY No. TBD
MAINTENANCE DIVISION No. 2

JOANN H. KOSAKA STATE OF WASHINGTON 34413 REGISTERED PROFESSIONAL ENGINEER PRELIMINARY

60% DESIGN (NOT FOR CONSTRUCTION)

KING COUNTY DEPT. OF LOCAL SERVICES
JOHN TAYLOR, DIRECTOR

UPPER TOKUL CREEK BRIDGE #271B BRIDGE REPLACEMENT PROJECT

ROADWAY PLAN AND PROFILE

King County

SHEET 11 OF 33 SHEETS

320-90 (RD02)

SEC. 17, T.24 N., R.08 E., W.M.

GENERAL NOTES

1. SEE SHEET 3 FOR TYPICAL ROADWAY SECTIONS.
2. SEE SHEETS 10–11 FOR ROADWAY PLAN AND PROFILE.
3. CONTRACTOR SHALL MAINTAIN ACCESS TO RESIDENTIAL DRIVEWAY THROUGHOUT CONSTRUCTION.

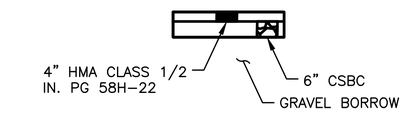

DRIVEWAY PAVEMENT SECTION

NOT TO SCALE

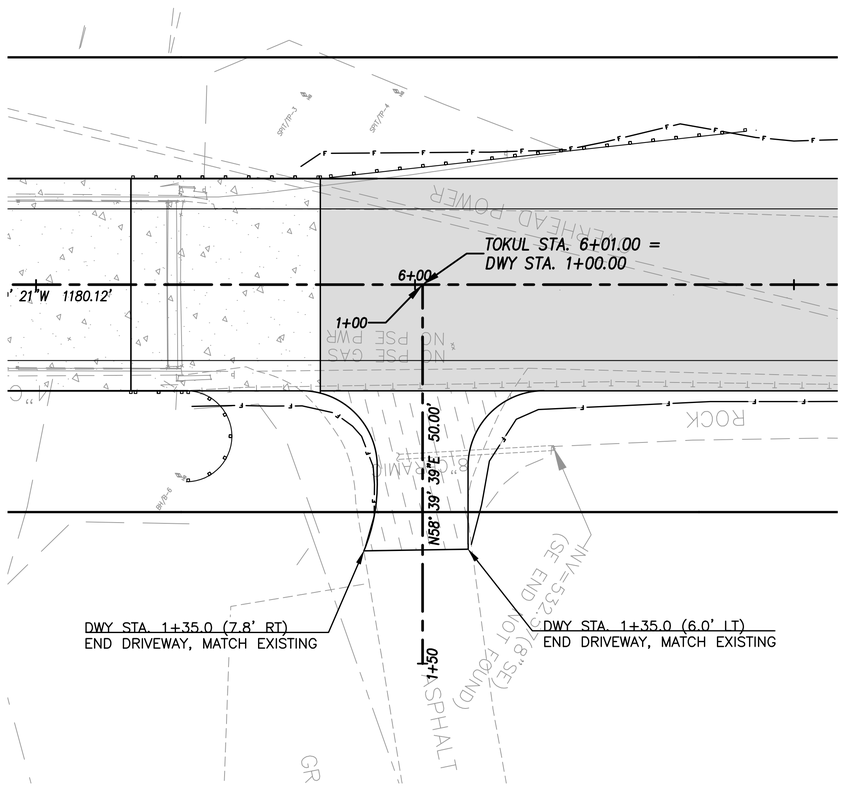

DRIVEWAY PLAN
(STA. 6+01.00)

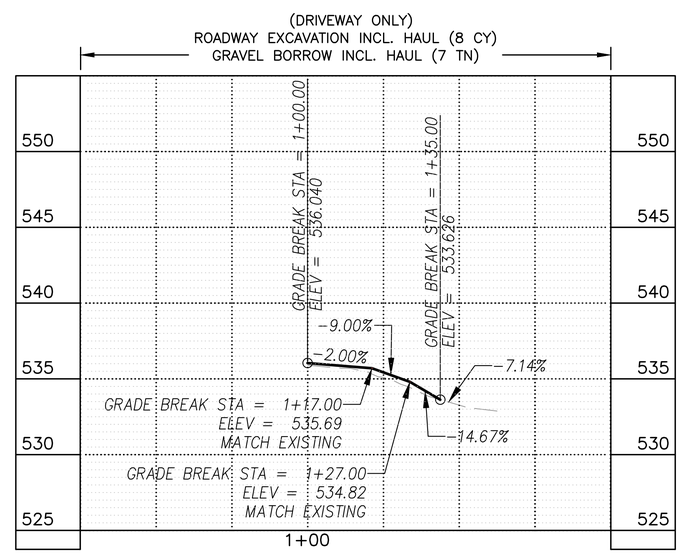

DRIVEWAY PROFILE
(STA. 6+01.00)

MERIDIAN
W.S.L.G.N.Z.
NAD 83/91

DATUM

N.G.V.D. 88

HORIZONTAL
10 5 0 10 20
SCALE IN FEET

VERTICAL
5 2.5 0 5 10
SCALE IN FEET

811
Know what's below.
Call before you dig.

SURVEY JOB NO: 19030	05/2019			
CHECKED: J. EVANS	08/2019			
CAD ENTERED: D. FOSTER	12/2020			
DESIGNED: R. KOESTER	12/2020			
CHECKED: S. SOISETH	12/2020			
SUPERVISOR: S. SOISETH	12/2020			
		NUM. REVISION	BY	DATE

DAVID EVANS AND ASSOCIATES INC.

RENEE A. KOESTER — STATE OF WASHINGTON — 35594 — REGISTERED PROFESSIONAL ENGINEER — PRELIMINARY

FED. AID No. N/A

PROJECT No. 1135999

SURVEY No. TBD

MAINTENANCE DIVISION No. 2

JOANN H. KOSAKA — STATE OF WASHINGTON — 34413 — REGISTERED PROFESSIONAL ENGINEER — PRELIMINARY

60% DESIGN (NOT FOR CONSTRUCTION)

KING COUNTY DEPT. OF LOCAL SERVICES
JOHN TAYLOR, DIRECTOR

UPPER TOKUL CREEK BRIDGE #271B
BRIDGE REPLACEMENT PROJECT

DRIVEWAY PLAN AND PROFILE

King County

SHEET 12 OF 33 SHEETS

320-90 (DW01)

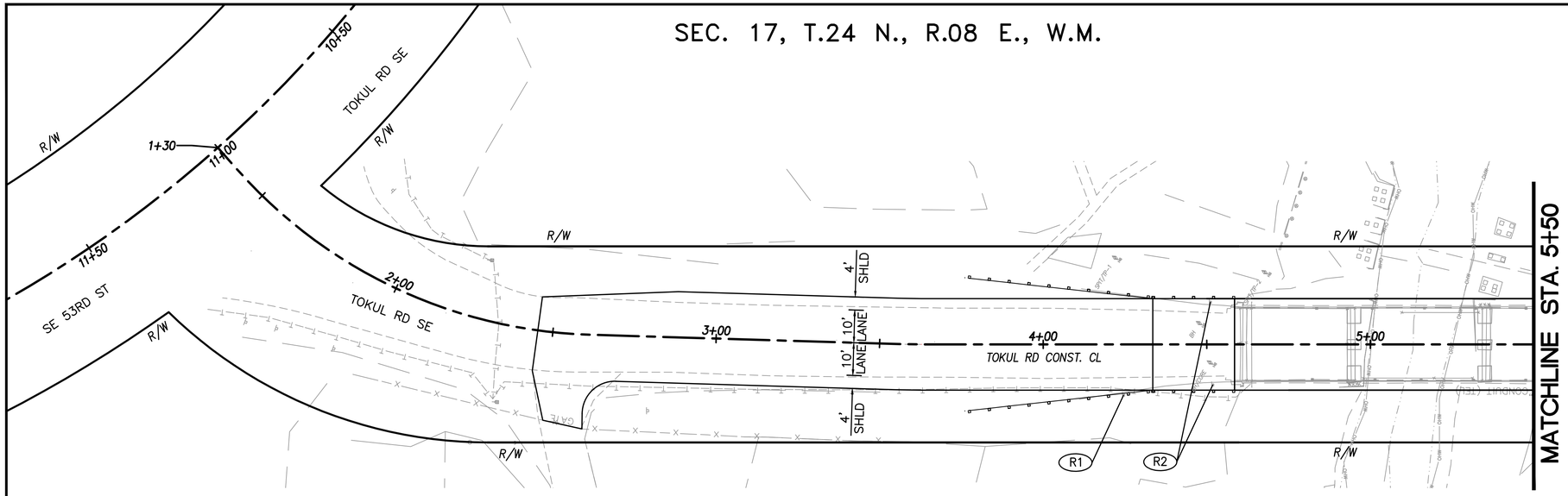

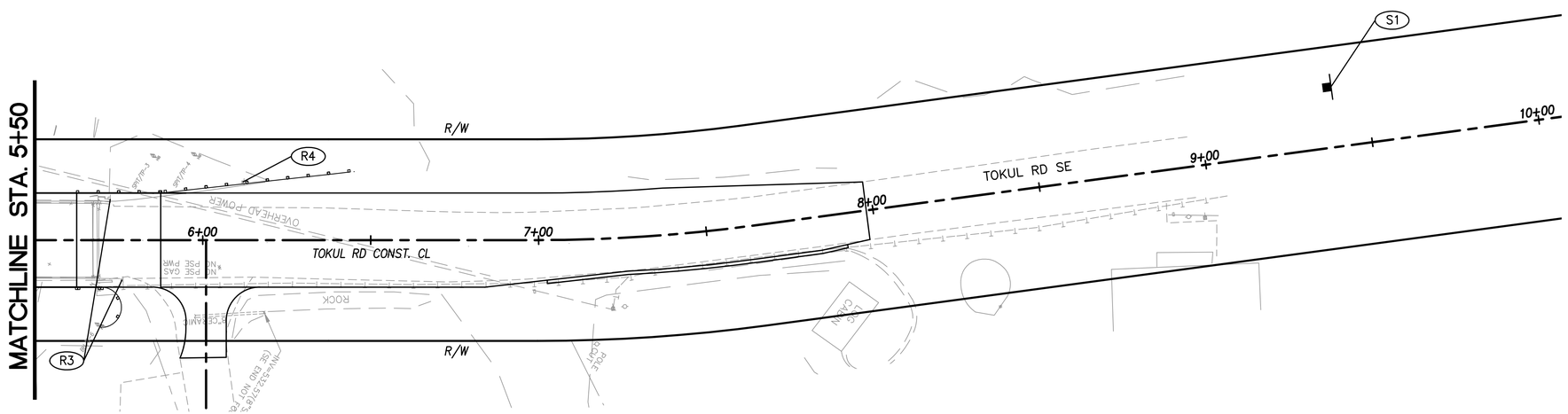

SIGNING LEGEND

- SIGN
- (S#) PROPOSED SIGN LOCATION
- (R#) SIGN REMOVAL

GENERAL NOTES

1. SEE SHEETS 10–11 FOR ROADWAY PLAN AND PROFILE.
2. FOR SIGNS AND SIGN SUPPORT DETAILS, SEE WSDOT STANDARD PLANS, SECTION G.
3. SIGN CLEARANCE FROM BOTTOM OF SIGN TO FINISHED GROUND AT NEARBY SHOULDER ELEVATION SHALL BE 7'. CLEARANCES PROVIDED IN SIGN SCHEDULE ARE FROM BOTTOM OF SIGN TO FINISHED GROUND AT SIGN LOCATION. OFFSETS ARE NOTED ON PLAN. FINAL SIGN LOCATION SHALL BE APPROVED BY THE ENGINEER.
4. SIGNS SHALL BE MOUNTED ON NEW 2" I.D. GALVANIZED STEEL POSTS AND INSTALLED PER WSDOT STD PLAN G–24.20–01. CONTRACTOR SHALL INSTALL SIGN FOUNDATIONS PER WSDOT STD PLAN G–25.10–05, UNLESS OTHERWISE NOTED.
5. PROTECT AND MAINTAIN ALL SIGNS NOT NOTED ON PLANS.

DESIGNER NOTE:
KC TO DISCUSS WHETHER TO INCLUDE ADDITIONAL SIGNING REQUIREMENTS FOR LIMITED SIGHT DISTANCE AT CREST OF EX. HILL (OUTSIDE OF PROJECT LIMITS).

SIGN SCHEDULE

SIGN NO.	SIGN DESIGNATION	SIGN DESCRIPTION	STATION	OFFSET	SIGN WIDTH	SIGN HEIGHT	VERTICAL CLEARANCE	POST TYPE	REMARKS
S1	W7–6	HILL BLOCKS VIEW	9+40	±18.0' LT	30"	30"	9'–6"	2"x2" PERF.	REFER TO DESIGNER NOTE
	W13–1P	20 MPH	9+40	±18.0' LT	18"	18"	8'–0"	2"x2" PERF.	REFER TO DESIGNER NOTE
R1	EX.	WEIGHT LIMIT	4+25	15.5' LT	––	––	––	WOOD	TWO SIGNS
R2	EX.	DELINEATORS (X2)	4+51	12' LT/RT	––	––	––	WOOD	REMOVE FROM BOTH SIDES OF BRIDGE
R3	EX.	DELINEATORS (X2)	±5+74	±12' LT/RT	––	––	––	WOOD	REMOVE FROM BOTH SIDES OF BRIDGE
R4	EX.	WEIGHT LIMIT	6+12	17.3' LT	––	––	––	WOOD	TWO SIGNS

MERIDIAN
W.S.L.G.N.Z.
NAD 83/91
DATUM
N.G.V.D. 88

HORIZONTAL
20 10 0 20 40
SCALE IN FEET

811
Know what's below.
Call before you dig.

SURVEY JOB NO:	19030	05/2019
CHECKED:	J. EVANS	08/2019
CAD ENTERED:	D. FOSTER	12/2020
DESIGNED:	R. KOESTER	12/2020
CHECKED:	S. SOISETH	12/2020
SUPERVISOR:	S. SOISETH	12/2020

NUM.	REVISION	BY	DATE

DAVID EVANS AND ASSOCIATES INC.

RENEE A. KOESTER STATE OF WASHINGTON 35594 REGISTERED PROFESSIONAL ENGINEER PRELIMINARY

FED. AID No. N/A
PROJECT No. 1135999
SURVEY No. TBD
MAINTENANCE DIVISION No. 2

JOANN H. KOSAKING STATE OF WASHINGTON 34413 REGISTERED PROFESSIONAL ENGINEER PRELIMINARY

60% DESIGN (NOT FOR CONSTRUCTION)

KING COUNTY DEPT. OF LOCAL SERVICES
JOHN TAYLOR, DIRECTOR

UPPER TOKUL CREEK BRIDGE #271B
BRIDGE REPLACEMENT PROJECT

SIGINING PLAN

King County

SHEET 13 OF 33 SHEETS

320-90 (CH01)

SEC. 17, T.24 N., R.08 E., W.M.

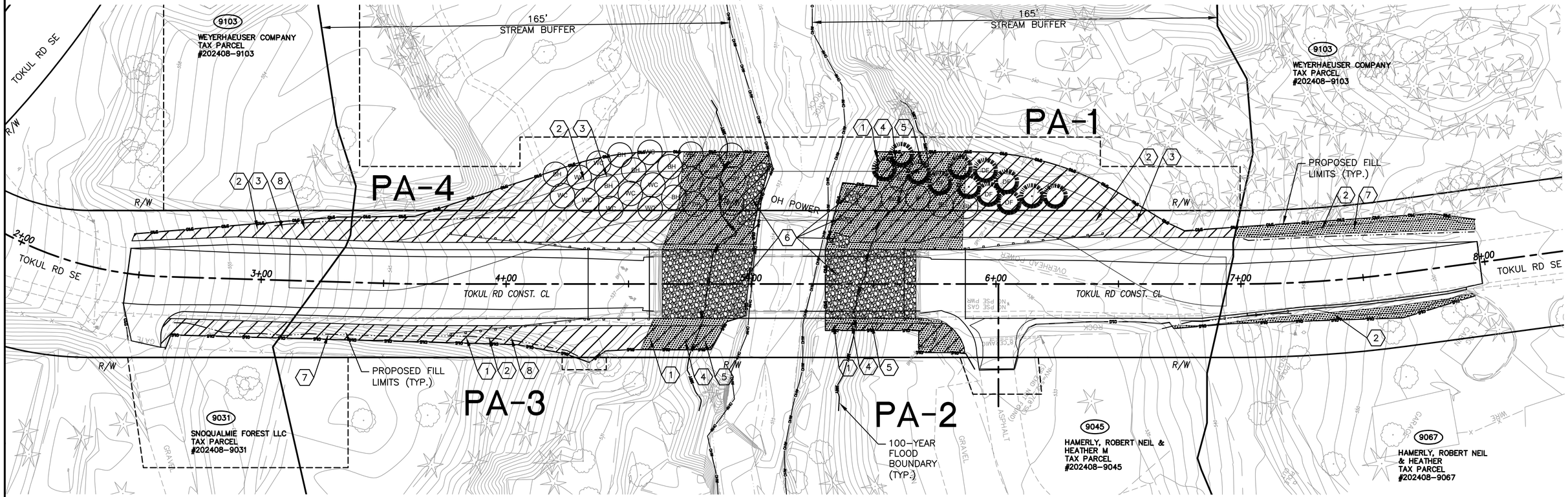

CONSTRUCTION NOTES

1. AMEND SENSITIVE AREAS WITH 4" SOIL AMENDMENT INCORPORATED TO A 10" DEPTH PER SHEET RP04, DETAIL 1
2. AMEND ROADSIDE EMBANKMENT WITH A 4" SOIL AMENDMENT INCORPORATED TO A 14" DEPTH PER SHEET RP04, DETAIL 2
3. INSTALL UNIFORM 3" DEPTH BARK OR WOOD CHIP MULCH
4. INSTALL 3" DEEP BARK OR WOOD CHIP MULCH RINGS AT EACH PLANT PER SHEET RP03, DETAIL 1 AND 2
5. INSTALL BIODEGRADABLE EROSION CONTROL BLANKET PER SHEET RP02, DETAIL 2
6. INSTALL 2' DEPTH 12" STREAMBED COBBLE PER SHEET RP02, DETAIL 1
7. INSTALL BIODEGRADABLE EROSION CONTROL BLANKET PLACEMENT FOR DITCHES PER WSDOT STANDARD PLAN I-60.20-01
8. INSTALL SINGLE ROW OF WATTLE ON SLOPE PER WSDOT STANDARD PLAN I-30.30-02

GENERAL NOTES

1. SEE PLANT SCHEDULE AND PLANTING DETAILS, SHEET RP03
2. SEE BANK STABILIZATION DETAILS, SEE SHEET RP02 15
3. SEE SITE PREPARATION PLAN FOR EXISTING BRIDGE FOOTING REMOVAL

LEGEND

- BIODEGRADABLE EROSION CONTROL BLANKET SEEDING, FERTILIZING AND MULCHING
- TREE AND SHRUB PLANTING
- 2' DEPTH 12" STREAMBED COBBLE
- PA-1 PLANTING AREA
- 100 YEAR FLOOD BOUNDARY
- ORDINARY HIGH WATER MARK (O.H.W.M.)
- STREAM CENTERLINE
- CLEARING AND GRADING BOUNDARY
- TCE
- GUARDRAIL
- DITCH CENTERLINE
- EXISTING DECIDUOUS TREE
- EXISTING EVERGREEN TREE

20 10 0 20 40
SCALE IN FEET

MERIDIAN
W.S.L.G.N.Z.
NAD 83/91
DATUM
N.G.V.D. 88

811
Know what's below.
Call before you dig.

SURVEY JOB NO:	19030	05/2019
CHECKED:	J. EVANS	08/2019
CAD ENTERED:	G. KING	03/2020
DESIGNED:	J. GAGE	03/2020
CHECKED:	S. SOISETH	03/2020
SUPERVISOR:	S. SOISETH	03/2020

NUM.	REVISION	BY	DATE

DAVID EVANS AND ASSOCIATES INC.

STATE OF WASHINGTON
JONATHAN C. GAGE
LANDSCAPE ARCHITECT
PRELIMINARY
EXP. 03/17/2022

FED. AID No. N/A
PROJECT No. 1135999
SURVEY No. TBD
MAINTENANCE DIVISION No. 2

JOANN H. KOSA
STATE OF WASHINGTON
34413
REGISTERED
PROFESSIONAL ENGINEER
PRELIMINARY

60% DESIGN
(NOT FOR
CONSTRUCTION)

KING COUNTY DEPT. OF LOCAL SERVICES
JOHN TAYLOR, DIRECTOR

UPPER TOKUL CREEK BRIDGE #271B BRIDGE REPLACEMENT PROJECT

RESTORATION PLANS

King County

SHEET 14 OF 33 SHEETS

320-90 (RP01)

RESTORATION NOTES

1. INSTALL BIODEGRADABLE EROSION CONTROL BLANKET PER WSDOT STANDARD PLAN I-60.20-01.
2. BIODEGRADABLE EROSION CONTROL BLANKET PER 2020 WSDOT STANDARD SPECIFICATIONS 9-14.6(2) A FOR SLOPES STEEPER THAN 3:1(H:V).
3. ANCHOR BLANKET WITH WOOD STAKES AT 4' O.C. (BOTH WAYS). OVERLAP BLANKET 18" MINIMUM IN WATER FLOW DIRECTION. WOOD STAKES SHALL BE 2"X4"X18"(RIPPED DIAGONALLY).
4. FASTEN BLANKET AT TOP AND BOTTOM OF SLOPE WITH ANCHOR TRENCH PER DETAIL 2 (THIS SHEET).
5. BANK PROTECTION MATERIAL SHALL CONSIST OF 100% 12" COBBLE PER 2020 WSDOT STANDARD SPECIFICATIONS SECTION 9-03.11(2).
6. SOIL AMENDMENT SHALL CONSIST OF FINE COMPOST PER 2020 WSDOT STANDARD SPECIFICATIONS SECTION 9-14. 5(8).

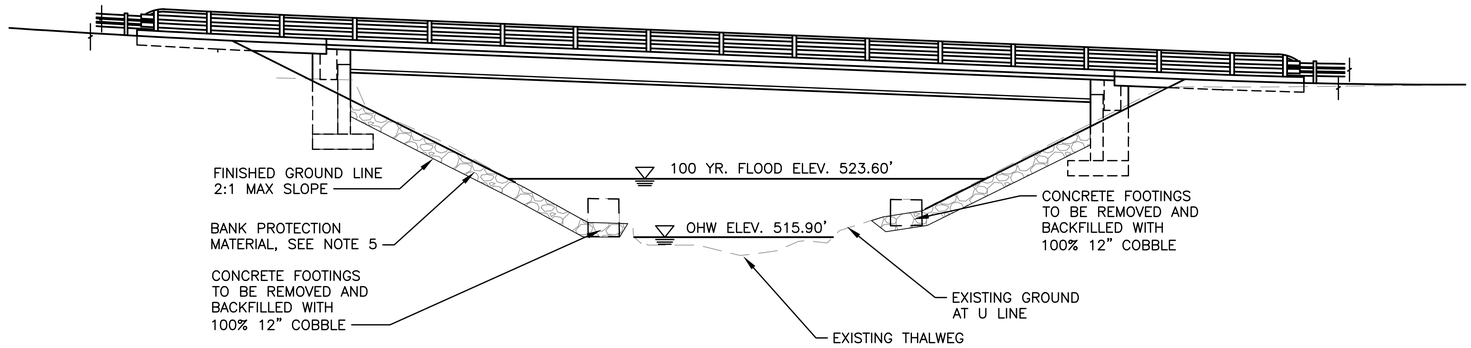

UNDER BRIDGE BANK STABILIZATION - TYPICAL SECTION

NOT TO SCALE

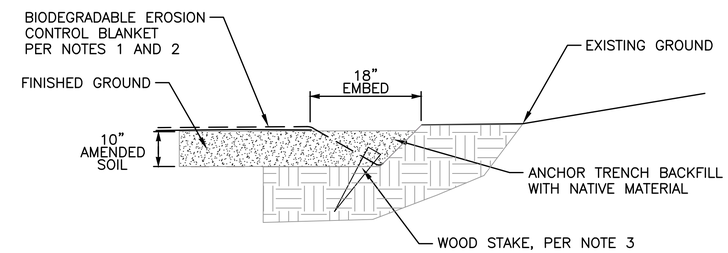

BLANKET ANCHOR TRENCH DETAIL

NOT TO SCALE

3 —

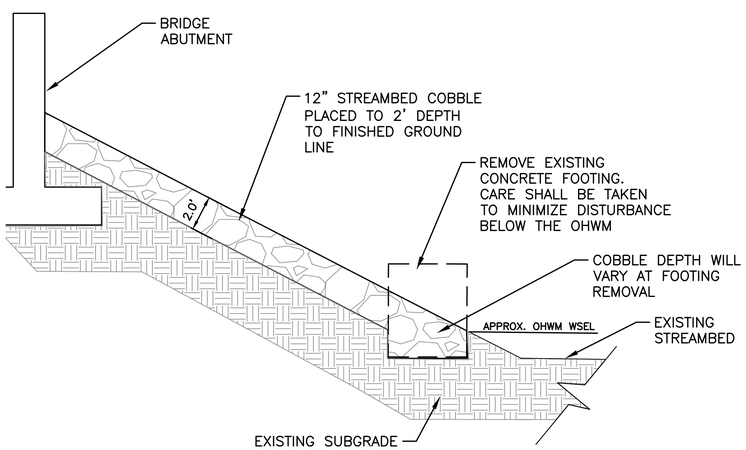

STREAMBED COBBLE PLACEMENT

NOT TO SCALE

1 —

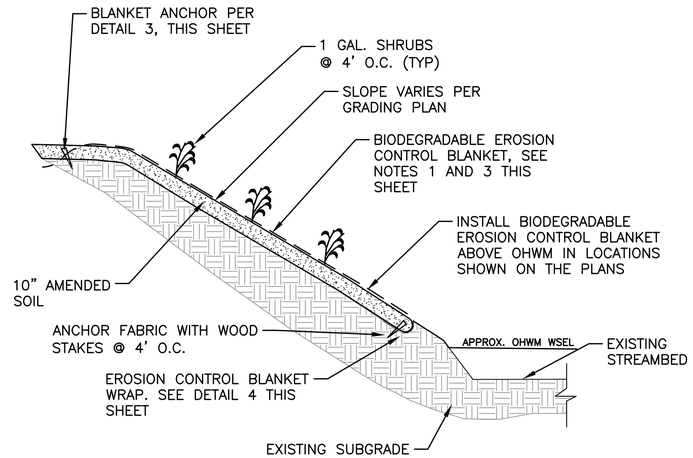

BANK STABILIZATION - DETAIL

NOT TO SCALE

2 —

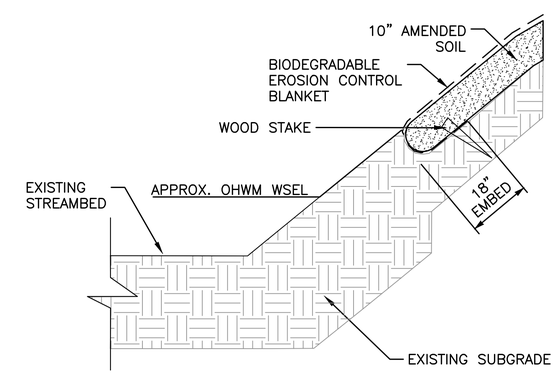

BLANKET WRAP DETAIL

NOT TO SCALE

4 —

MERIDIAN
W.S.L.G.N.Z.
NAD 83/91

DATUM

N.G.V.D. 88

811

Know what's below.
Call before you dig.

SURVEY JOB NO: 19030	05/2019			
CHECKED: J. EVANS	08/2019			
CAD ENTERED: G. KING	12/2020			
DESIGNED: J. GAGE	12/2020			
CHECKED: S. SOISETH	12/2020			
SUPERVISOR: S. SOISETH	12/2020			
		NUM. REVISION	BY	DATE

DAVID EVANS AND ASSOCIATES INC.

STATE OF WASHINGTON JONATHAN C. GAGE LANDSCAPE ARCHITECT EXP. 03/17/2022 PRELIMINARY

FED. AID No. N/A

PROJECT No. 1135999

SURVEY No. TBD

MAINTENANCE DIVISION No. 2

JOANN H. KOSAKA STATE OF WASHINGTON 34413 REGISTERED PROFESSIONAL ENGINEER PRELIMINARY

60% DESIGN (NOT FOR CONSTRUCTION)

KING COUNTY DEPT. OF LOCAL SERVICES

JOHN TAYLOR, DIRECTOR

UPPER TOKUL CREEK BRIDGE #271B
BRIDGE REPLACEMENT PROJECT

RESTORATION PLANS

King County

SHEET 15 OF 33 SHEETS

320-90 (RP02)

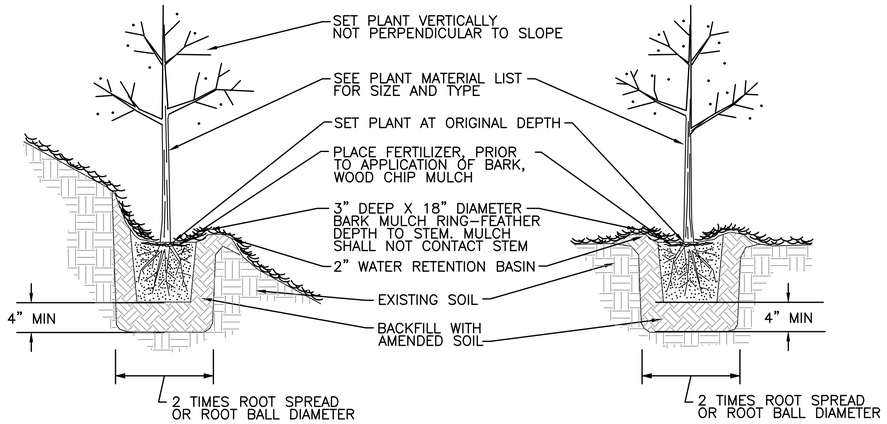

*NOTE: BARK, WOOD CHIP, MULCH SHALL BE PLACED IN 9" RADIUS AROUND EACH PLANT WHEN PLANTED IN SEEDED OR GRASS AREAS.

TREE AND SHRUB PLANTING ON SLOPE (1/–)

BARE ROOT AND CONTAINER — NOT TO SCALE

TREE AND SHRUB PLANTING (2/–)

BARE ROOT AND CONTAINER — NOT TO SCALE

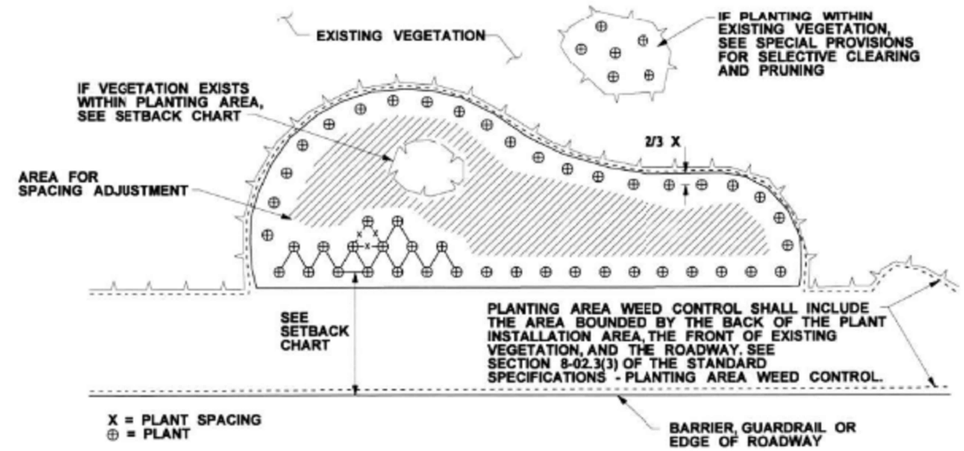

PLANTING AREA LAYOUT (3/–)

NOT TO SCALE

PLANT SCHEDULE

BOTANICAL NAME	COMMON NAME	COND.	SIZE (HT)	QUANTITIES PA–1	PA–2	PA–3	PA–4	TOTAL	SPACING	REMARKS
TREES										
MALUS FUSCA	WESTERN CRABAPPLE	2 GAL.	6' HT, MIN.	3	0	0	13	16	AS SHOWN	WELL BRANCHED
CRATAEGUS DOUGLASII	BLACK HAWTHORN	2 GAL.	6' HT, MIN.	3	0	0	10	13	AS SHOWN	WELL BRANCHED, SINGLE LEADER
THUJA PLICATA	WESTERN RED CEDAR	2 GAL.	48" HT, MIN.	7	0	0	0	7	AS SHOWN	WELL BRANCHED, SINGLE LEADER
PSEUDOTSUGA MENZIESII	DOUGLAS FIR	2 GAL.	48" HT, MIN.	5	0	0	0	5	AS SHOWN	WELL BRANCHED, SINGLE LEADER
SHRUBS										
ACER CIRCINATUM	VINE MAPLE	1 GAL.	18" HT, MIN.	28	2	23	52	105	4' O.C.	WELL BRANCHED
HOLODISCUS DISCOLOR	OCEAN SPRAY	1 GAL.	18" HT, MIN.	28	0	0	34	62	4' O.C.	WELL BRANCHED
RUBUS SPECTABILIS	SALMONBERRY	1 GAL.	12" HT, MIN.	28	0	0	51	79	4' O.C.	WELL BRANCHED
ROSA NUTKANA	NOOTKA ROSE	1 GAL.	12" HT, MIN.	42	12	39	36	129	4' O.C.	WELL BRANCHED
SYMPHORICARPOS ALBUS	SNOWBERRY	1 GAL.	12" HT, MIN.	42	12	40	36	130	4' O.C.	WELL BRANCHED
RIBES SANGUINEUM	RED FLOWERING CURRANT	1 GAL.	12" HT, MIN.	28	0	23	30	81	4' O.C.	WELL BRANCHED
LONICERA INVOLUCRATA	BLACK TWINBERRY	1 GAL.	18" HT, MIN.	28	0	8	34	70	4' O.C.	WELL BRANCHED
SALIX SITCHENSIS	SITKA WILLOW	1 GAL.	36" HT, MIN.	28	0	8	34	70	4' O.C.	WELL BRANCHED
GROUNDCOVERS										
POLYSTICHUM MUNITUM	SWORD FERN	1 GAL.	12" HT, MIN.	56	0	16	68	140	2' O.C.	WELL BRANCHED, PLANT IN CLUSTERS OF 3–5 INTERPLANT AMONG SHRUBS
UPLAND HYDROSEED MIX										

INSTALL 73 WILLOW ON SOUTH BANK, 24 WILLOW ON NORTH BANK, BELOW 100 YEAR FLOOD PLAN BOUNDARY

PLANTING NOTES

1. PLANT SHRUBS IN SINGLE SPECIES GROUPINGS CLUSTERS OF 3–7.
   SEE PLANT SETBACK CHART (SHEET R04, DETAIL 3) FOR TREE AND SHRUB
2. SETBACKS.
   SAVE AND PROTECT EXISTING DESIRABLE VEGETATION PER SECTION
3. 1–07.16(2) IN THE STANDARD SPECIFICATIONS.
   ALL PLANTING AREAS SHALL BE SEEDED DURING THE APPLICATION DATES
4. SPECIFIED IN SECTION 8–01.3(2)F OF THE STANDARD SPECIFICATIONS. ANY SEEDED AREAS THAT DON'T ADEQUATELY GERMINATE SHALL RECEIVE AN APPROVED TESC BMP UNTIL RESEEDING CAN OCCUR DURING THE NEXT APPLICATION DATE SPECIFIED.
   PLACE 3" BARK OR WOOD CHIP MULCH RINGS IN ALL BUFFER PLANTING
5. AREAS.
   CONTRACTOR SHALL REMOVE ALL STABILIZED CONSTRUCTION ENTRANCE
6. TEMPORARY ACCESS ROADS AND DE–COMPACT SOILS TO AN 18" DEPTH IN PLANTING AREAS. RESTORE OTHER TEMPORARILY DISTURBED AREAS AS DIRECTED BY PROJECT ENGINEER UPON COMPLETION OF WORK. CONTRACTOR SHALL RESTORE ANY ADDITIONAL IMPACTS MADE TO STREAM
7. BUFFER AREAS NOT SHOWN ON THESE PLANS.
   ALL TREES SHALL BE STAKED WITH 2"X2" WOOD STAKES DRIVEN TO
8. REFUSAL, PLACED DIAGONALLY, AND FASTENED WITH POLY TREE TIE.

MERIDIAN
W.S.L.G.N.Z.
NAD 83/91
DATUM
N.G.V.D. 88

811
Know what's below.
Call before you dig.

SURVEY JOB NO:	19030	05/2019
CHECKED:	J. EVANS	08/2019
CAD ENTERED:	G. KING	12/2020
DESIGNED:	J. GAGE	12/2020
CHECKED:	S. SOISETH	12/2020
SUPERVISOR:	S. SOISETH	12/2020

NUM.	REVISION	BY	DATE

DAVID EVANS AND ASSOCIATES INC.

STATE OF WASHINGTON — JONATHAN C. GRAY — LANDSCAPE ARCHITECT — MY COMM. EXP. 03/17/2022 — PRELIMINARY

FED. AID No. N/A
PROJECT No. 1135999
SURVEY No. TBD
MAINTENANCE DIVISION No. 2

JOANN H. KOSA — STATE OF WASHINGTON — REGISTERED PROFESSIONAL ENGINEER — 34413 — PRELIMINARY

60% DESIGN (NOT FOR CONSTRUCTION)

KING COUNTY DEPT. OF LOCAL SERVICES
JOHN TAYLOR, DIRECTOR

UPPER TOKUL CREEK BRIDGE #271B
BRIDGE REPLACEMENT PROJECT

RESTORATION PLANS

King County

SHEET 16 OF 33 SHEETS

320-90 (RP03)

SEC. 17, T.24 N., R.08 E., W.M.

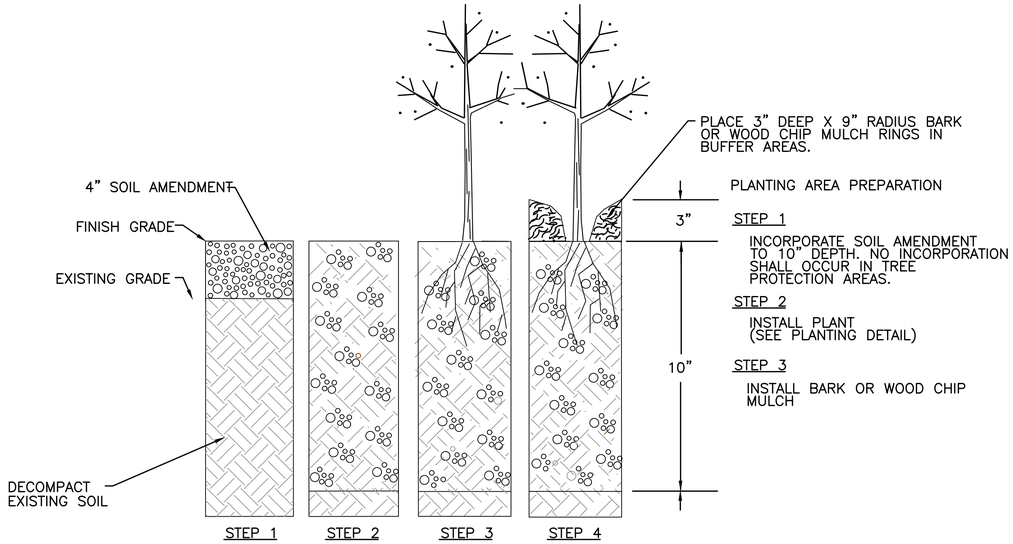

SENSITIVE AREA SOIL PREPARATION SEQUENCE OF WORK (1)

NOT TO SCALE

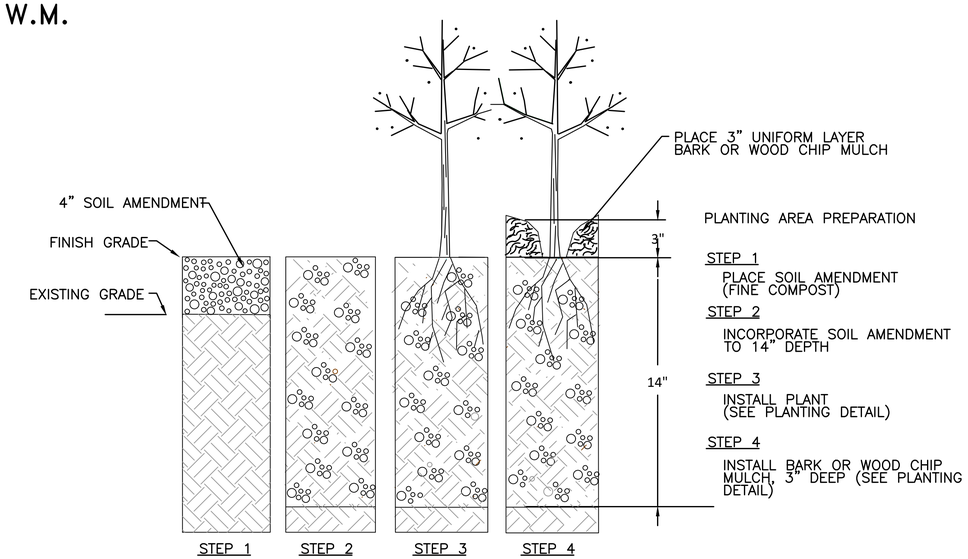

ROADSIDE EMBANKMENT SOIL PREPARATION SEQUENCE OF WORK (2)

NOT TO SCALE

THIS CHART SUPPLEMENTS SECTION 8.02.3(7) OF THE STANDARD SPECIFICATIONS. SETBACKS APPLY UNLESS OTHERWISE ADJUSTED BY ENGINEER DURING PLANT STAKING OR LAYOUT. DISTANCES BELOW ARE TO THE STEM OR TRUNK OF THE PLANT BEING INSTALLED.

	GROUND-COVER *	SMALL SHRUB **	TALL SHRUB ***	DECIDUOUS TREE	EVERGREEN TREE	SMALL TREE****
GUARDRAIL BARRIER	5'	5'	10'	15'	15'	15'
EDGE OF ROADWAY	5'	10'	15'	20'	20'	20'
WALLS	3'	5'	10'	15'	15'	15'
FENCE	1.5'	3'	3'	10'	10'	10'
SIGNS	1.5'	6'	6'	15'	15'	15'
EXISTING TREE TRUNK	5'	5'	10'	15'	15'	15'
EXISTING VEGETATION MASS	5'	5'	10'	10'	10'	10'
OVERHEAD POWER	–	–	10'	20'	20'	0'
DRAINAGE STRUCTURE	5'	5'	10'	10'	10'	10'
DRAINAGE ACCESS ROAD	5'	5'	15'	15'	15'	15'
BRIDGE	3'	5'	10'	15'	15'	15'

* GROUNDCOVERS GROW NO TALLER THAN 1.5 FEET AT MATURITY.
** SMALL SHRUBS GROW NO TALLER THAN 3 FEET AT MATURITY.
*** TALL SHRUBS GROW TALLER THAN 3 FEET AT MATURITY.
*** SMALL TREES GROW NOT TALLER THAN 30 FEET AT MATURITY.

PLANT MATERIAL SETBACK CHART (3)

MERIDIAN
W.S.L.G.N.Z.
NAD 83/91

DATUM

N.G.V.D. 88

811

Know what's below.
Call before you dig.

SURVEY JOB NO:	19030	05/2019
CHECKED:	J. EVANS	08/2019
CAD ENTERED:	G. KING	12/2020
DESIGNED:	J. GAGE	12/2020
CHECKED:	S. SOISETH	12/2020
SUPERVISOR:	S. SOISETH	12/2020

NUM.	REVISION	BY	DATE

DAVID EVANS AND ASSOCIATES INC.

STATE OF WASHINGTON JONATHAN C. GAGE LANDSCAPE ARCHITECT EXP. 03/17/2022 PRELIMINARY

FED. AID No. N/A

PROJECT No. 1135999

SURVEY No. TBD

MAINTENANCE DIVISION No. 2

JOANN H. KOSA KING STATE OF WASHINGTON 34413 REGISTERED PROFESSIONAL ENGINEER PRELIMINARY

60% DESIGN (NOT FOR CONSTRUCTION)

KING COUNTY DEPT. OF LOCAL SERVICES
JOHN TAYLOR, DIRECTOR

UPPER TOKUL CREEK BRIDGE #271B
BRIDGE REPLACEMENT PROJECT

RESTORATION PLANS

King County

SHEET 17 OF 33 SHEETS

320-90 (RP04)

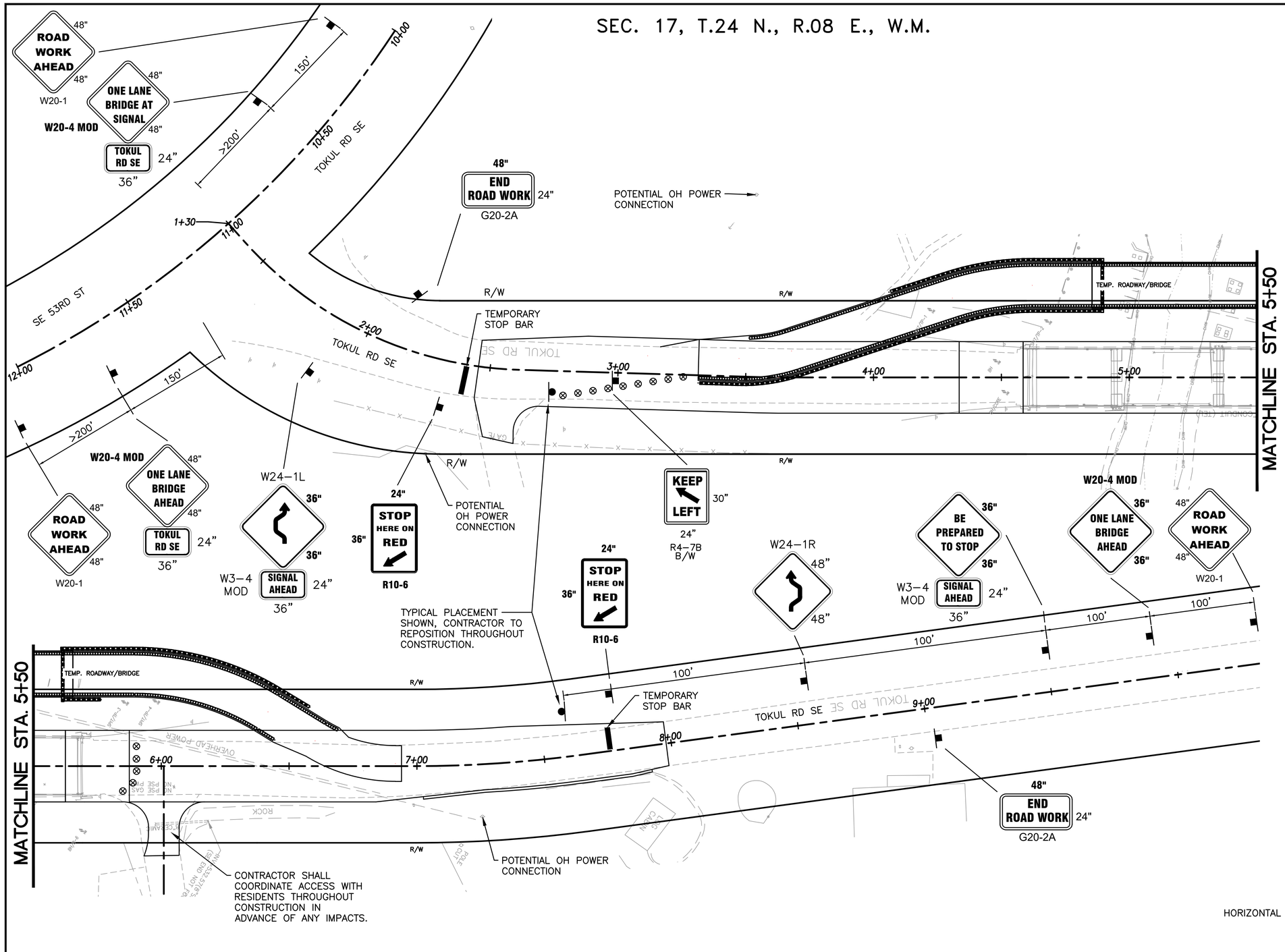

TEMPORARY SIGNAL NOTES

1. CONTRACTOR TO SUPPLY AND MAINTAIN TEMPORARY TRAILER–MOUNTED TRAFFIC SIGNAL. CONTRACTOR SHALL PROVIDE ADEQUATE PROTECTION AROUND TRAFFIC SIGNAL. TEMPORARY TRAILER–MOUNTED TRAFFIC SIGNALS SHALL EACH CONSIST OF:
   - TOWABLE TRAILER EQUIPPED WITH LEVELING JACKS
   - TWO SIGNAL HEADS EACH WITH THREE 12–INCH LED SIGNAL SECTIONS (RED, YELLOW, AND GREEN)
   - ONE SIGNAL HEAD IS TO BE MOUNTED ON A TOWABLE TRAILER.
   - THE SYSTEM IS TO CONTAIN A LOCKABLE CABINET MOUNTED CONTROLLER WITH A CONFLICT MONITOR.
   - EACH SIGNAL UNIT SHALL BE CAPABLE OF OPERATING FROM SOLAR ARRAY CHARGED BATTERY POWER. SOLAR ARRAY SHALL ALLOW FOR TILT AND ROTATION FOR OPTIMAL CHARGING.
   - SIGNAL SOLAR/BATTERY CONFIGURATION TO SUPPLY UNINTERRUPTED POWER FOR DURATION OF CONSTRUCTION PHASE. GENERATOR OPERATIONS ONLY TO BE USED IF APPROVED BY ENGINEER. CONTRACTOR MAY COORDINATE WITH PSE FOR UNINTERRUPTED POWER CONNECTION FROM NEARBY OVERHEAD POWER FACILITIES.
   - SYSTEM SHALL CONTAIN METHOD FOR ANTI–THEFT.
   - CONTRACTOR TO MAINTAIN TEMPORARY SIGNAL SYSTEM DURING THE ENTIRETY OF THE PROJECT CONSTRUCTION.
   - CONTRACTOR RESPONSIBLE FOR ADJUSTING LOCATION OF TEMPORARY SIGNAL TRAILERS DURING EACH PHASE OF CONSTRUCTION.
2. DETECTION AT TEMPORARY TRAFFIC SIGNAL BE INCLUDED FOR ALL APPROACHES OF THE BRIDGE, INCLUDING DRIVEWAY IF NEEDED. THE CONTRACTOR SHALL PLACE THE DETECTORS INTO OPERATION TO THE SATISFACTION OF THE ENGINEER.
3. THE CONTRACTOR SHALL BE RESPONSIBLE FOR PROGRAMMING THE VEHICLE DETECTION SYSTEM TO THE DETECTION AREAS FOR EACH CONSTRUCTION STAGE. ALL COSTS ASSOCIATED WITH VEHICLE DETECTION SHALL BE INCLUSIVE OF THE PORTABLE TEMPORARY TRAFFIC CONTROL SIGNAL BID ITEM.
4. CONTRACTOR TO INSTALL ALL NECESSARY TEMPORARY ROADWAY CHANNELIZATION, SUCH AS STOP BARS, IN COORDINATION WITH PLACEMENT OF TEMPORARY TRAFFIC SIGNAL FOR ALL PHASES.

GENERAL NOTES

1. SEE SHEET 4–5 FOR DIVERSION ROADWAY PLAN AND PROFILE AND DIVERSION ROADWAY PLAN AND PROFILE.
2. CONTRACTOR SHALL MAINTAIN ACCESS AND CONNECTIVITY TO DRIVEWAY FOR DURATION OF CONSTRUCTION. ROADWAY CONNECTION FROM DRIVEWAY TO TEMPORARY SIGNAL SHALL BE PROVIDED DURING CONSTRUCTION.
3. ALL SIGNS SHALL BE BLACK ON ORANGE.

LEGEND

- TRAFFIC CONTROL SIGN
- TEMPORARY TRAFFIC SIGNAL
- CHANNELIZATION DEVICES
- TEMPORARY STOP BAR

MERIDIAN
W.S.L.G.N.Z.
NAD 83/91
DATUM
N.G.V.D. 88

HORIZONTAL
20 10 0 20 40
SCALE IN FEET

811
Know what's below.
Call before you dig.

SURVEY JOB NO: 19030	05/2019			
CHECKED: J. EVANS	08/2019			
CAD ENTERED: D. FOSTER	12/2020			
DESIGNED: R. KOESTER	12/2020			
CHECKED: S. SOISETH	12/2020			
SUPERVISOR: S. SOISETH	12/2020			
		NUM. REVISION	BY	DATE

DAVID EVANS AND ASSOCIATES INC.

RENEE A. KOESTER STATE OF WASHINGTON 35594 REGISTERED PROFESSIONAL ENGINEER PRELIMINARY

FED. AID No. N/A
PROJECT No. 1135999
SURVEY No. TBD
MAINTENANCE DIVISION No. 2

JOANN H. KOSA STATE OF WASHINGTON 34413 REGISTERED PROFESSIONAL ENGINEER PRELIMINARY

60% DESIGN (NOT FOR CONSTRUCTION)

KING COUNTY DEPT. OF LOCAL SERVICES
JOHN TAYLOR, DIRECTOR

UPPER TOKUL CREEK BRIDGE #271B BRIDGE REPLACEMENT PROJECT

DIVERSION TEMPORARY TRAFFIC CONTROL AND SIGNAL PLAN

King County

SHEET 18 OF 33 SHEETS

320-90 (TC01)

SEC. 17, T.24 N., R.08 E., W.M.

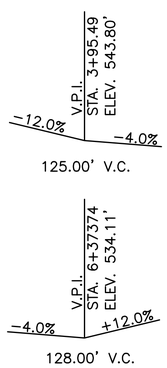

TOKUL ROAD SE PROFILE

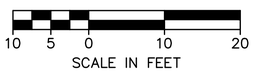

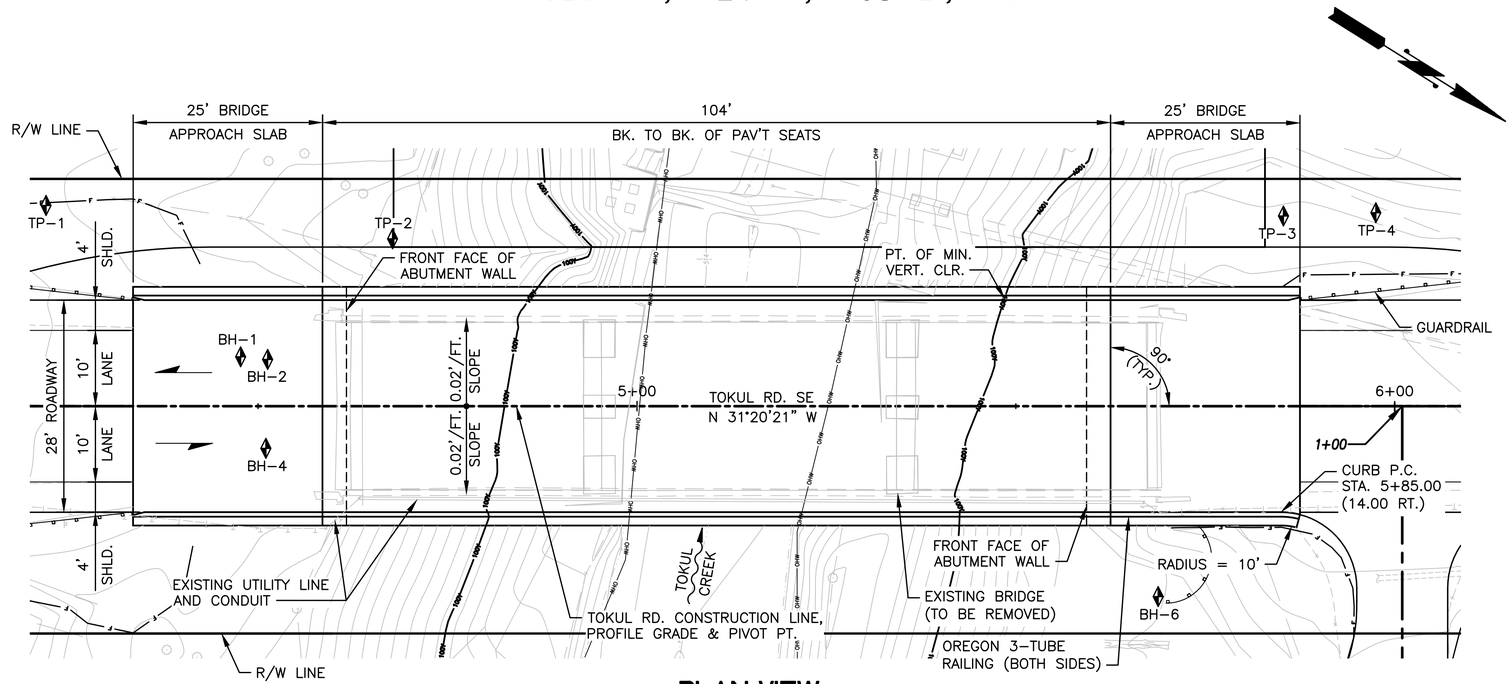

PLAN VIEW

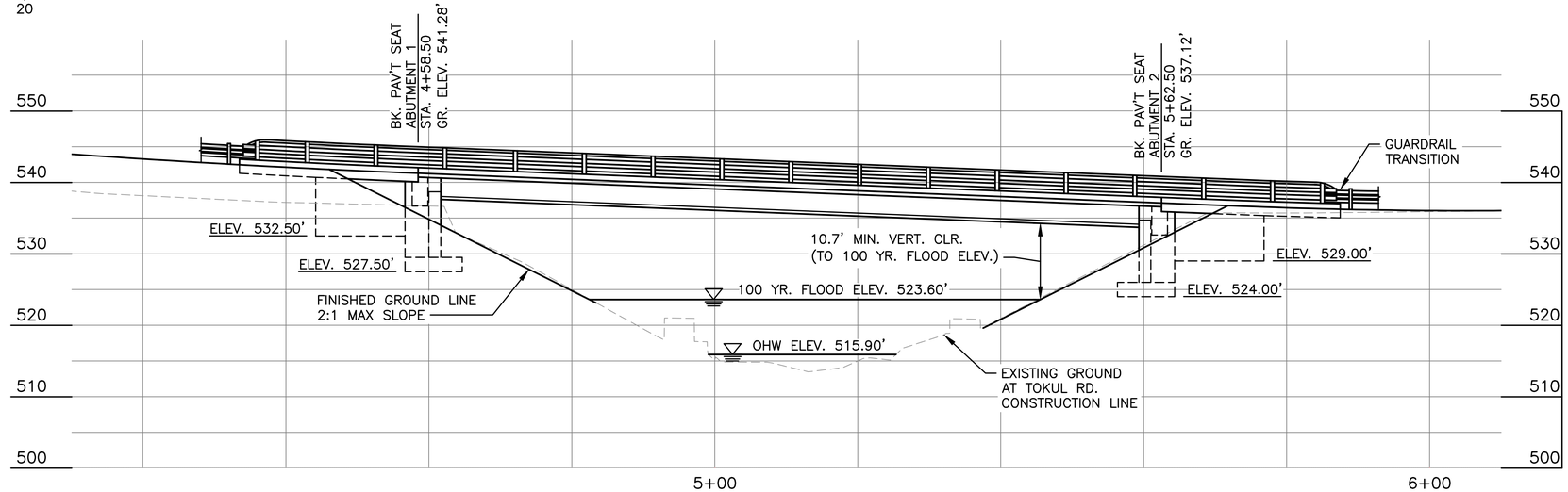

ELEVATION VIEW

GRADE ELEVATIONS SHOWN ARE FINISHED GRADES AT TOP OF BRIDGE DECK ON CONSTRUCTION LINE AND ARE EQUAL TO PROFILE GRADE.

MERIDIAN
W.S.L.G.N.Z.
NAD 83/91

N.G.V.D. 88

GENERAL STRUCTURE NOTES:

1. ALL MATERIAL AND WORKMANSHIP SHALL BE IN ACCORDANCE WITH THE REQUIREMENTS OF THE WASHINGTON STATE DEPARTMENT OF TRANSPORTATION STANDARD SPECIFICATIONS FOR ROAD, BRIDGE, AND MUNICIPAL CONSTRUCTION DATED 2020.
2. THIS STRUCTURE HAS BEEN DESIGNED IN ACCORDANCE WITH THE REQUIREMENTS OF THE AASHTO LRFD BRIDGE DESIGN SPECIFICATIONS 8TH EDITION 2017 AND THE WSDOT BRIDGE DESIGN MANUAL.
3. UNLESS OTHERWISE SHOWN IN THE PLANS, CONCRETE COVER MEASURED FROM THE FACE OF CONCRETE TO THE FACE OF ANY REINFORCING STEEL SHALL BE 2 1/2" AT THE TOP OF THE BRIDGE DECK, 3" AT THE BOTTOM OF FOOTING, 2" AT THE TOP OF FOOTING AND ALL OTHER LOCATIONS.
4. THE CONTRACTOR SHALL PLAN AND CONDUCT THE WORK IN SUCH A MANNER THAT NO OBJECTS OR FOREIGN MATERIALS FALL FROM THE WORK ON THE EXISTING OR NEW BRIDGE INTO THE RIVER CHANNEL BELOW. THE CONTRACTOR'S PLAN FOR ACCOMPLISHING THIS SHALL BE SUBMITTED TO THE ENGINEER FOR APPROVAL PRIOR TO THE START OF CONSTRUCTION.

DESIGN DATA:

1. DESIGN SPECIFICATIONS:
   - AASHTO LRFD BRIDGE DESIGN SPECIFICATIONS 8TH EDITION 2017
   - STATE OF WASHINGTON, DEPARTMENT OF TRANSPORTATION, BRIDGE DESIGN MANUAL (LRFD), SEPTEMBER 2020
   - SEISMIC DESIGN IN ACCORDNACE WITH AASHTO GUIDE SPECIFICATIONS FOR LRFD SEISMIC BRIDGE DESIGN, 2ND EDITION WITH INTERIMS THROUGH 2015.
2. DESIGN LOADS:
   - UNIT WEIGHTS:
     REINFORCED CONCRETE = 155 PCF
     PRECAST GIRDER UNIT WEIGHT = 165 PCF
     BACKFILL = 125 PCF
   - LIVE LOAD: HL-93
   - EARTH PRESSURE COEFFICIENTS: Ka = 0.27, Ko = 0.43, Kae = 0.40
   - FUTURE WEARING SURFACE: 35 PSF
   - SEISMIC PARAMETERS (FOR SITE CLASS C):
     ZERO PERIOD RESPONSE ACCELERATION (As) = 0.417g
     SHORT PERIOD ACCELERATION (SDS) = 0.943g
     LONG PERIOD ACCELERATION (SD1) = 0.943g
     SEISMIC DESIGN CATEGORY = C
3. RAILING LOADS:
   - RAILINGS ARE TEST LEVEL 4

PRECAST PRESTRESSED GIRDERS (WF36TDG) LOADING: HL-93

Know what's below.
Call before you dig.

SURVEY JOB NO:	19030	05/2019
CHECKED:	J. EVANS	08/2019
CAD ENTERED:	D. FOSTER	12/2020
DESIGNED:	A. CHARNESKI	12/2020
CHECKED:	E. FERLUGA	12/2020
SUPERVISOR:	S. SOISETH	12/2020

NUM.	REVISION	BY	DATE

DAVID EVANS AND ASSOCIATES INC.

PRELIMINARY — JACQUES PIERRE MARD — STATE OF WASHINGTON — 52807 — PROFESSIONAL ENGINEER

FED. AID No. N/A
PROJECT No. 1135999
SURVEY No. TBD
MAINTENANCE DIVISION No. 2

PRELIMINARY — JOANN H. KOSAKA — STATE OF WASHINGTON — 34413 — REGISTERED PROFESSIONAL ENGINEER

60% DESIGN (NOT FOR CONSTRUCTION)

KING COUNTY DEPT. OF LOCAL SERVICES
JOHN TAYLOR, DIRECTOR

UPPER TOKUL CREEK BRIDGE #271B BRIDGE REPLACEMENT PROJECT

BRIDGE LAYOUT

King County

SHEET 19 OF 33 SHEETS

320-90 (EB01)

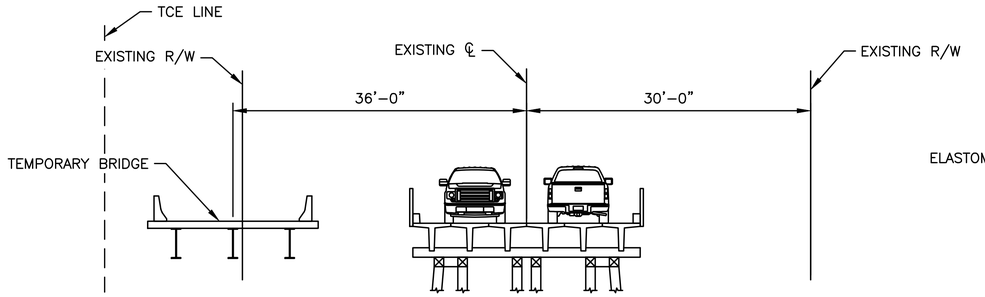

STAGE 1
CONSTRUCT TEMPORARY BRIDGE

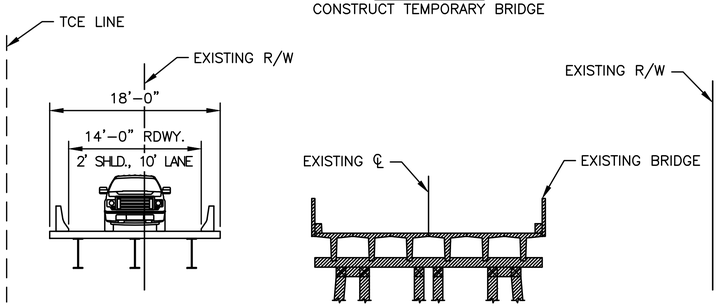

STAGE 2.1
SHIFT TRAFFIC TO TEMPORARY BRIDGE AND DEMO EXISTING BRIDGE

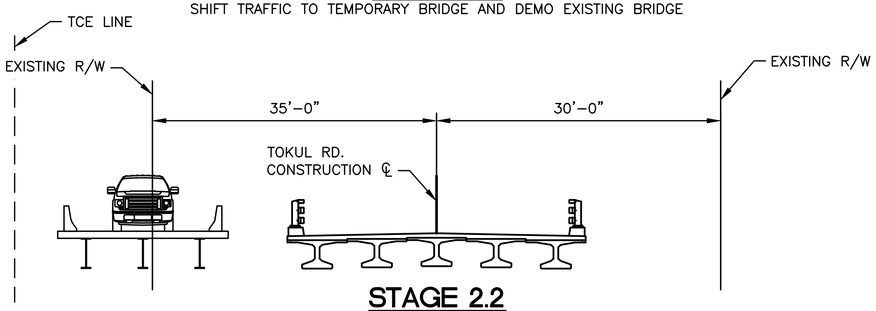

STAGE 2.2
CONSTRUCT NEW BRIDGE

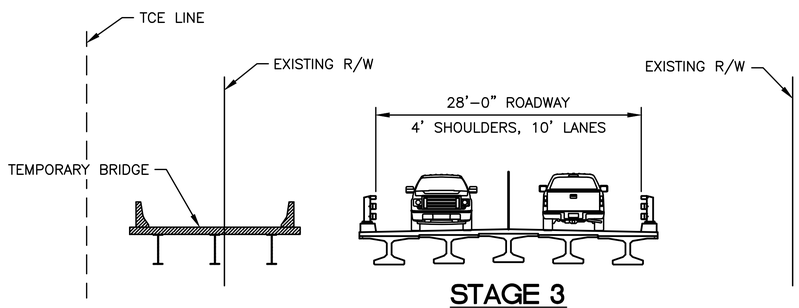

STAGE 3
SHIFT TRAFFIC TO NEW BRIDGE AND DEMO TEMPORARY BRIDGE

CONSTRUCTION STAGES

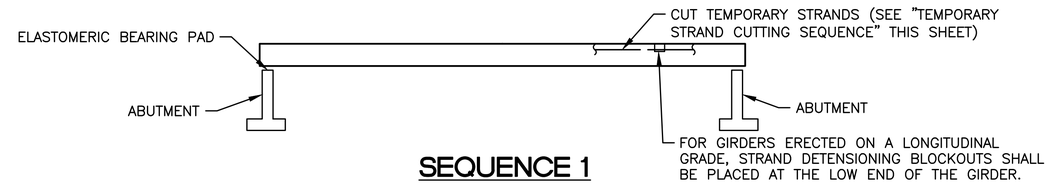

SEQUENCE 1
SET GIRDERS IN PLACE
INSTALL TEMPORARY BRACING FOR ERECTION IN ACCORDANCE WITH STD. SPEC. SECTION 6–02.3(17)F4.

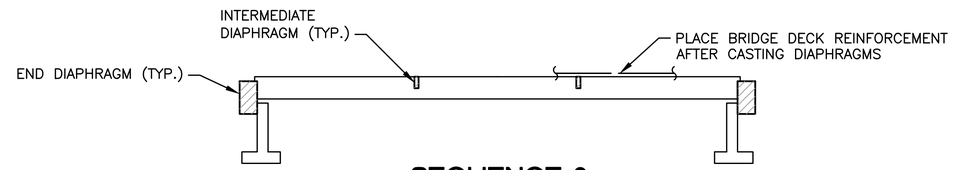

SEQUENCE 2
PLACE BRIDGE DECK REINFORCEMENT
INSTALL TEMPORARY BRACING FOR DIAPHRAGM AND DECK PLACEMENT IN ACCORDANCE WITH STD. SPEC. SECTION 6–02.3(17)F5.

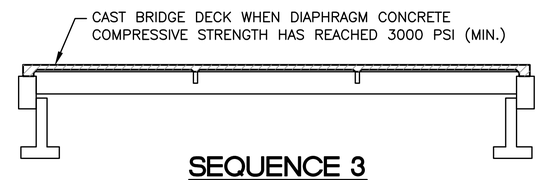

SEQUENCE 3
CAST BRIDGE DECK

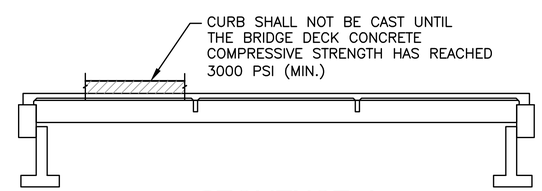

SEQUENCE 4
CAST CURB

CONSTRUCTION SEQUENCE - SUPERSTRUCTURE
(NEW BRIDGE)

TEMPORARY STRAND CUTTING SEQUENCE

1. ERECT AND BRACE GIRDERS.
2. JUST PRIOR TO CUTTING THE TEMPORARY STRANDS, REMOVE EXPANDED POLYSTYRENE IN BLOCKOUTS IN TOP FLANGE OF GIRDERS. ONCE THE EXPANDED POLYSTYRENE HAS BEEN REMOVED FROM THE STRAND DETENSIONING BLOCKOUT, PREVENT MOISTURE FROM ENTERING THE BLOCKOUT UNTIL THE TEMPORARY TOP STRAND IS CUT AND THE BLOCKOUT FILLED WITH GROUT.
3. CUT STRANDS IN BLOCKOUTS. STRANDS MAY BE CUT BY USING A CUTTING TORCH AND MOVING THE FLAME BACK AND FORTH OVER THE LENGTH OF EXPOSED STRAND TO LET INDIVIDUAL WIRES BREAK ONE AT A TIME TO LESSEN THE SHOCK TO THE GIRDER. STRANDS SHALL BE RELEASED IN A SYMMETRICAL MANNER ABOUT THE GIRDER CENTERLINE STARTING WITH THOSE FURTHEST FROM THE CENTERLINE AND WORKING INWARDS. FOR POST–TENSIONED TEMPORARY TOP STRANDS, ACTIVELY RESTRAIN THE STRAND CHUCKS AT THE GIRDER ENDS DURING CUTTING.
4. WITHIN 24 HOURS OF CUTTING THE TEMPORARY STRANDS, FILL BLOCKOUTS WITH A GROUTH CONFORMING TO STD. SPEC. 9–20.3(2). REMOVE ALL MOISTURE IN BLOCKOUTS PRIOR TO FILLING THEM WITH GROUT.

Know what's below.
Call before you dig.

SURVEY JOB NO:	19030	05/2019
CHECKED:	J. EVANS	08/2019
CAD ENTERED:	D. FOSTER	12/2020
DESIGNED:	A. CHARNESKI	12/2020
CHECKED:	E. FERLUGA	12/2020
SUPERVISOR:	S. SOISETH	12/2020

NUM.	REVISION	BY	DATE

DAVID EVANS AND ASSOCIATES INC.

JACQUES PIERRE MAZARD — STATE OF WASHINGTON — 22601 — REGISTERED PROFESSIONAL ENGINEER — PRELIMINARY

FED. AID No. N/A
PROJECT No. 1135999
SURVEY No. TBD
MAINTENANCE DIVISION No. 2

JOANN H. KOSA — STATE OF WASHINGTON — 34413 — REGISTERED PROFESSIONAL ENGINEER — PRELIMINARY

60% DESIGN (NOT FOR CONSTRUCTION)

KING COUNTY DEPT. OF LOCAL SERVICES
JOHN TAYLOR, DIRECTOR

UPPER TOKUL CREEK BRIDGE #271B
BRIDGE REPLACEMENT PROJECT

CONSTRUCTION SEQUENCE

King County

SHEET 20 OF 33 SHEETS

320-90 (EB02)

Drfo 12/02/20 3:26pm – P:\K\KCOX00000063\0400CAD\EB\SHEETS\EB-CS-001-KCOX0063.dwg

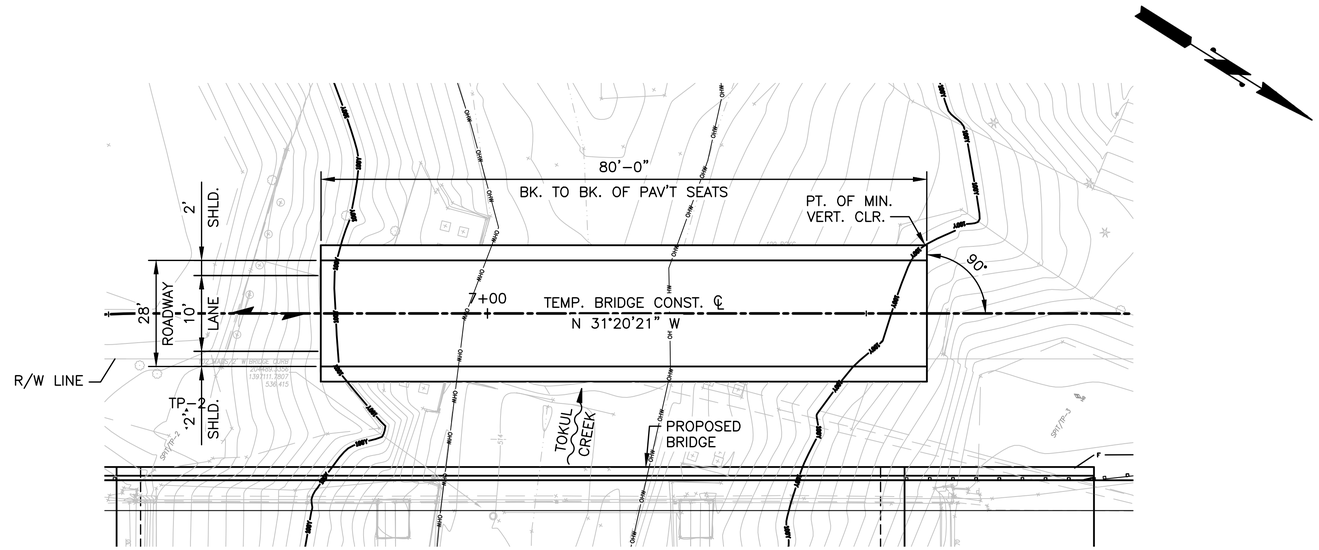

PLAN VIEW

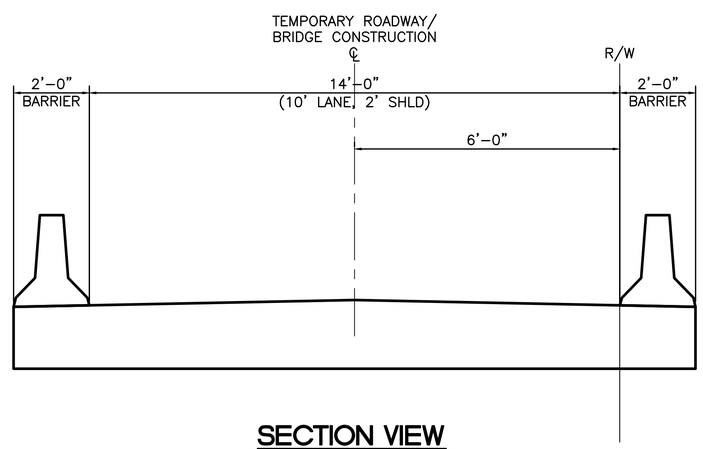

SECTION VIEW

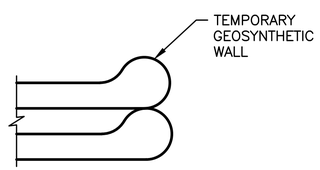

GEOSYNTHETIC WALL DETAIL

TEMPORARY BRIDGE NOTES

1. THE CONTRACTOR SHALL DESIGN, FURNISH, ERECT, MAINTAIN, AND REMOVE THE TEMPORARY BRIDGE AND APPROACH WALLS IN ACCORDANCE WITH THE SPECIAL PROVISION AND DETAILS SHOWN IN THE PLANS.
2. SEE SPECIAL PROVISIONS FOR TEMPORARY BRIDGE DESIGN REQUIREMENT.
3. WALLS FOR TEMPORARY APPROACH SHALL BE GEOSNYTHETIC WALLS IN ACCORDANCE WITH STANDARD PLAN D-3.09 OR APPROVED EQUAL.

MERIDIAN
W.S.L.G.N.Z.
NAD 83/91

N.G.V.D. 88

Know what's below.
Call before you dig.

SURVEY JOB NO: 19030	05/2019			
CHECKED: J. EVANS	08/2019			
CAD ENTERED: D. FOSTER	12/2020			
DESIGNED: A. CHARNESKI	12/2020			
CHECKED: E. FERLUGA	12/2020			
SUPERVISOR: S. SOISETH	12/2020			
		NUM. REVISION	BY	DATE

DAVID EVANS AND ASSOCIATES INC.

JACQUES PIERRE MAYARD, STATE OF WASHINGTON, 22801, PROFESSIONAL ENGINEER, STRUCTURAL ENGINEER

PRELIMINARY

FED. AID No. N/A

PROJECT No. 1135999

SURVEY No. TBD

MAINTENANCE DIVISION No. 2

JOANN H. KOSA-WANG, STATE OF WASHINGTON, 34413, REGISTERED PROFESSIONAL ENGINEER

PRELIMINARY

60% DESIGN (NOT FOR CONSTRUCTION)

KING COUNTY DEPT. OF LOCAL SERVICES
JOHN TAYLOR, DIRECTOR

UPPER TOKUL CREEK BRIDGE #271B
BRIDGE REPLACEMENT PROJECT

TEMPORARY BRIDGE LAYOUT

King County

SHEET 21 OF 33 SHEETS

320-90 (EB03)

B1

DATE OF BORING: 1/23/03

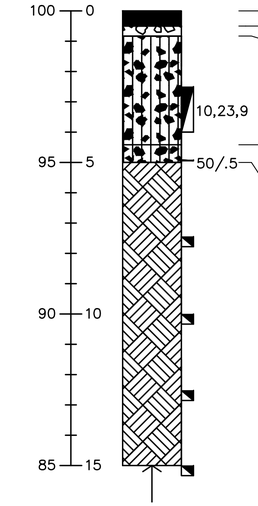

- 6 INCHES OF ASPHALT PAVEMENT.
- CRUSHED SURFACING TOP COURSE.
- BROWN SILTY GRAVEL WITH SAND, FEW COBBLES, MOIST, DENSE. (FILL) TESTED CUTTINGS
- BROWN SILTY GRAVEL WITH SAND AND COBBLES AND BOULDERS, DRY TO MOIST, VERY DENSE.
- BASALT AND ANDESITE AT 5.1 FEET. SAMPLES OF CUTTINGS WERE TAKEN IN LIEU OF SPTS.

TERMINATED THE BORING AT 15 FEET BELOW SURFACE, AND STILL DRILLING IN ROCK

B2

DATE OF BORING: 1/23/03

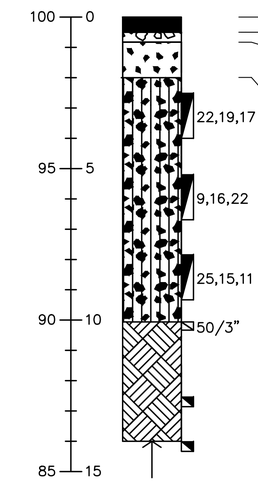

- ASPHALT PAVEMENT 6 INCHES THICK
- CRUSHED SURFACING TOP COURSE
- BROWN POORLY GRADED GRAVEL WITH SILT, SAND, AND A FEW COBBLES, MOIST, DENSE. (FILL)
- BROWN SILTY GRAVEL WITH SAND, DRY TO MOIST, DENSE. (FILL)
- BASALT AND ANDESITE AT 10.3 FEET BELOW THE SURFACE. SAMPLES OF CUTTINGS COLLECTED IN LIEU OF SPTS.

BORING TERMINATED AT 14 FEET BELOW THE SURFACE. DRILL STILL IN ROCK.

B3

DATE OF BORING: 1/23/03

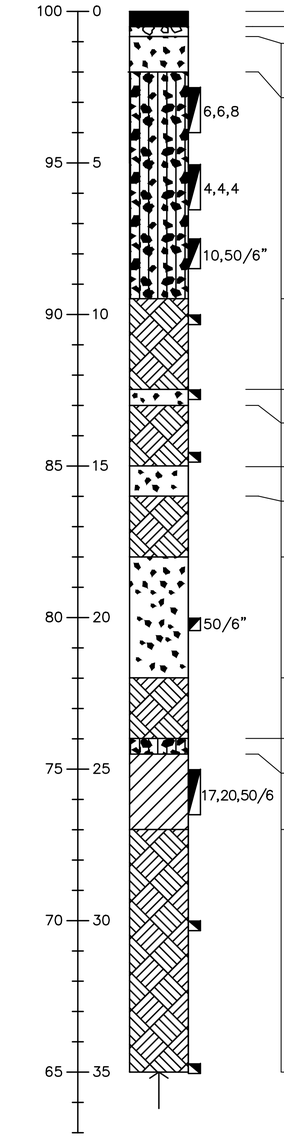

- ASPHALT PAVEMENT 6 INCHES THICK
- CRUSHED SURFACING TOP COURSE
- BROWN POORLY GRADED GRAVEL WITH SAND AND A FEW COBBLES, MOIST, DENSE. (FILL)
- BROWN SILTY GRAVEL WITH SAND, MOIST, MEDIUM DENSE. (FILL)
- DARK GRAY TO BLUE BASALT AND ANDESITE AT 8.3 FEET BELOW THE SURFACE. COLLECTED CUTTINGS
- BROWN POORLY GRADE GRAVEL WITH SAND, MOIST, DENSE.
- DARK BASALT AND ANDESITE.
- BROWN POORLY GRADED GRAVEL WITH SAND AND SILT, MOIST, DENSE
- DARK BASALT AND ANDESITE.
- FRACTURE ZONE FROM 18 FEET
- BROWN ANGULAR GRAVEL WITH SAND, WET, VERY DENSE
- BROWN TO BLACK BASALT CHIPS
- BROWN SILTY GRAVEL, WET, VERY DENSE.
- GRAY LEAN CLAY WITH SAND AND GRAVEL, WET, VERY DENSE.
- GRAY BASALT.

BORING TERMINATED AT 35 FEET. STILL DRILLING IN ROCK.

B4

DATE OF BORING: 1/23/19

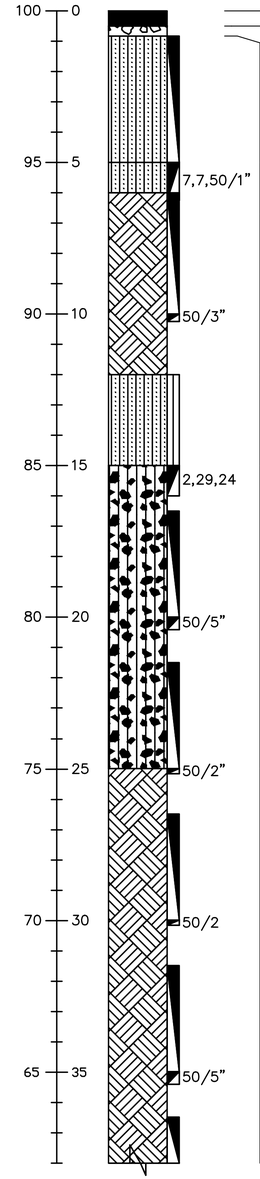

- ASPHALT PAVEMENT – APPROX. 6"
- CRUSHED SURFACING – APPROX. 4"
- DARK BROWN, DENSE, SILTY SAND WITH GRAVEL, MOIST TO WET.
- DARK BROWN, VERY DENSE, SILTY SAND WITH GRAVEL, MOIST.
- LARGE BASALT BOULDER(S) FROM 6' to 12'.
- DARK BROWN, DENSE, SITY SAND WITH GRAVEL, NON–PLASTIC, MOIST.
- BROWN, VERY DENSE, SILTY GRAVEL WITH SAND, COBBLES AND BOULDERS, NON–PLASTIC, MOIST.
- GRAY, VERY DENSE, HIGHLY WEATHERED BASALT.
- GREENISH GRAY, VERY DENSE, HIGHLY WEATHERED BASALT,
- GRAY, VERY DENSE, WEATHERED BASALT.

B4 (CONTINUED)

DATE OF BORING: 1/23/19

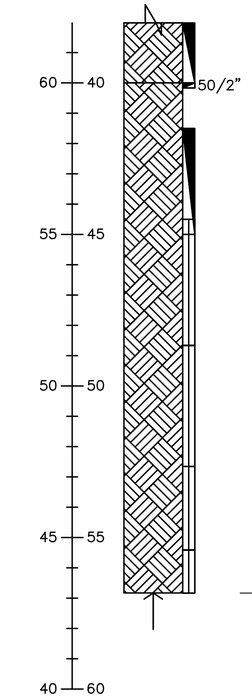

- GRAY, VERY DENSE, JOINTED AND FRACTURED BASALT.
- CORE RUN 1: JOINTED AND FRACTURED BASALT – SEE REPORT FOR MORE DETAILED DESCRIPTION.
- CORE RUN 2: JOINTED AND FRACTURED BASALT – SEE REPORT FOR MORE DETAILED DESCRIPTION.
- CORE RUN 3: JOINTED AND FRACTURED BASALT – SEE REPORT FOR MORE DETAILED DESCRIPTION.
- CORE RUN 4: JOINTED AND FRACTURED BASALT – SEE REPORT FOR MORE DETAILED DESCRIPTION.

BORING TERMINATED AT 56' 8" BELOW THE GROUND SURFACE.

B5

DATE OF BORING: 3/8/19

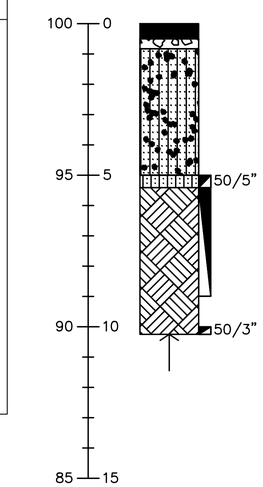

- ASPHALT PAVEMENT – APPROX. 6"
- CRUSHED SURFACING – APPROX. 4"
- BROWN TRANSITIONING TO REDDISH BROWN, DENSE, POORLY GRADED SILTY GRAVEL WITH SAND, MOIST TO WET.
- LARGE BASALT BOULDER(S).

DRILLING TERMINATED AT 10.25 FEET DUE TO PRACTICAL REFUSAL WITH SONIC DRILL RIG.

LEGEND:

SOIL SAMPLERS

- ROCK CORE
- BULK/GRAB SAMPLE
- STANDARD PENETRATION TEST

MISC. SYMBOLS

- BORING TERMINATED
- BORING CONTINUES

BORING LOGS ARE PROVIDED FOR INFORMATION ONLY AND ARE TAKEN FORM REPORT TITLED PRELIMINARY GEOTECHNICAL REPORT TOKUL CREEK BRIDGE #271B REPLACEMENT TOKUL ROAD SE (NEAR SE 53RD WAY) KING COUNTY, WASHINGTON DATED 10/7/2019.

811 Know what's below. Call before you dig.

SURVEY JOB NO:	19030	05/2019
CHECKED:	J. EVANS	08/2019
CAD ENTERED:	D. FOSTER	12/2020
DESIGNED:	A. CHARNESKI	12/2020
CHECKED:	E. FERLUGA	12/2020
SUPERVISOR:	S. SOISETH	12/2020

NUM.	REVISION	BY	DATE

DAVID EVANS AND ASSOCIATES INC.

PRELIMINARY

FED. AID No. N/A

PROJECT No. 1135999

SURVEY No. TBD

MAINTENANCE DIVISION No. 2

JOANN H. KOSA, STATE OF WASHINGTON, 34413, REGISTERED PROFESSIONAL ENGINEER — PRELIMINARY

60% DESIGN (NOT FOR CONSTRUCTION)

KING COUNTY DEPT. OF LOCAL SERVICES

JOHN TAYLOR, DIRECTOR

UPPER TOKUL CREEK BRIDGE #271B BRIDGE REPLACEMENT PROJECT

BORING LOGS 1 OF 2

King County

SHEET 22 OF 33 SHEETS

320-90 (EB04)

Drfo 12/02/20 3:28pm – P:\K\KCOX0000063\0400CAD\EB\SHEETS\EB-PR-003-KCOX0063.dwg

B6

DATE OF BORING: 10/15/20

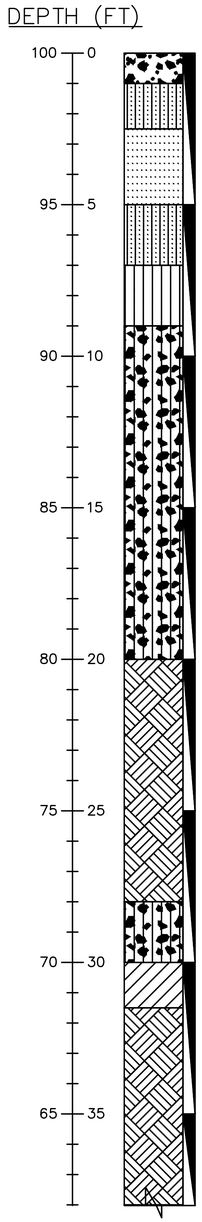

- CRUSHED SURFACING BASE COURSE (RECENTLY PLACED FILL FOR DRILL PAD).
- DARK BROWN, LOOSE, SILTY FINE SAND WITH GRAVEL, NON-PLASTIC, MOIST (FILL).
- LIGHT BROWN, WELL GRADED SAND WITH SILT AND GRAVEL, MOIST (FILL).
- REDDISH BROWN, SILTY SAND WITH GRAVEL, NON-PLASTIC, MOIST (FILL).
- GRAY SILT WITH FINE SAND, OXIDIZED ROOT ZONES,LOW PLASTICITY, MOIST.
- REDDISH BROWN, SILTY GRAVEL WITH SAND, COBBLES AND BOULDERS, NON- PLASTIC, MOIST.
- GRAY, VERY DENSE, WEATHERED BASALT.
- BROWN, DENSE, SILTY GRAVEL WITH SAND AND COBBLES, NON-PLASTIC, MOIST.
- GRAY, MEDIUM PLASTICITY CLAY WITH SOME GRAVEL, MOIST, WET.
- GRAY, VERY DENSE, WEATHERED BASALT.

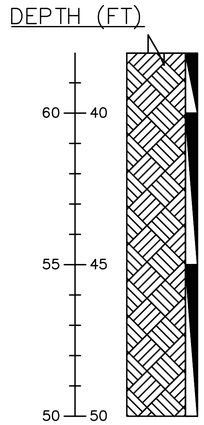

B6 (CONTINUED)

DATE OF BORING: 10/15/20

- GRAY, VERY DENSE, WEATHERED BASALT.

TP-1

DATE OF BORING: 10/9/20

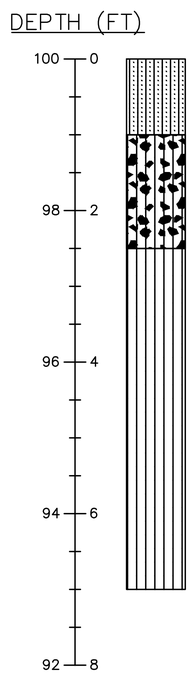

- FOREST DUFF, ROOTS AND BROWN, LOOSE, SILTY SAND WITH GRAVEL, NON-PLASTIC, MOIST (FILL).
- LIGHT BROWN, LOOSE, SILTY GRAVEL WITH SAND, COBBLES AND OCCASIONAL SMALL BOULDERS, NON-PLASTIC, MOIST (FILL?).
- REDDISH BROWN, MEDIUM DENSE, SILT WITH SAND, GRAVEL, COBBLES AND 1' – 3' BOULDERS, NON-PLASTIC TO LOW PLASTICITY, MOIST.

TEST PIT TERMINATED AT 7'.

TP-2

DATE OF BORING: 10/9/20

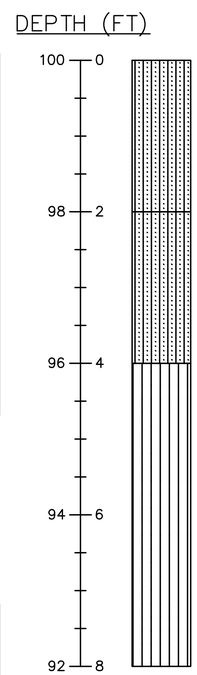

- FOREST DUFF, ROOTS AND BROWN, LOOSE, SILTY SAND WITH GRAVEL, NON-PLASTIC, MOIST (FILL?).
- BROWN, LOOSE, SILTY SAND WITH GRAVEL, COBBLES AND FEW BOULDERS, NON-PLASTIC, MOIST.
- YELLOWISH BROWN, MEDIUM DENSE, SANDY SILT WITH GRAVEL, COBBLES AND 1' – 3' BOULDERS, NON-PLASTIC TO LOW PLASTICITY, MOIST.

TEST PIT TERMINATED AT 8'.

TP-3

DATE OF BORING: 10/9/20

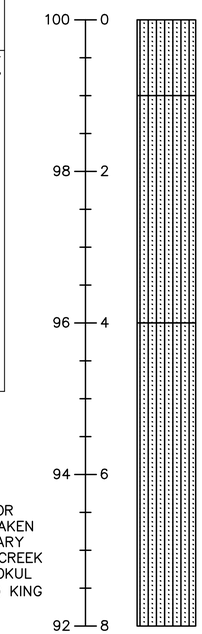

- FOREST DUFF, ROOTS AND BROWN, LOOSE SILTY SAND WITH GRAVEL AND COBBLES, NON-PLASTIC, MOIST
- REDDISH BROWN, LOOSE, SILTY SAND WITH GRAVEL, SOME COBBLES AND FEW 1' – 2' BOULDERS, NON-PLASTIC, MOIST (FILL?).
- REDDISH BROWN, MEDIUM DENSE, SILTY SAND WITH GRAVEL, SOME COBBLES AND 1' – 3' BOULDERS, NON-PLASTIC, MOIST.

TEST PIT TERMINATED AT 8'.

TP-4

DATE OF BORING: 10/9/20

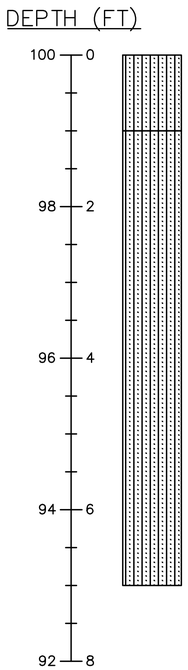

- FOREST DUFF, ROOTS AND BROWN, LOOSE SILTY SAND WITH GRAVEL AND COBBLES, NON-PLASTIC, MOIST (FILL?)
- BROWN BECOMING REDDISH BROWN, LOOSE, SILTY SAND WITH GRAVEL, SOME COBBLES AND 1' – 3' BOULDERS, NON-PLASTIC, MOIST (FILL TO 4'?).

TEST PIT TERMINATED AT 7'.

NOTES:

1. THE BORINGS WERE DRILLED BETWEEN JANUARY 23, AND JANUARY 24, 2003 WITH A TRUCK-MOUNTED MOBILE B61 DRILL. A DOWN THE HOLE PERCUSSION DRILL EQUIPPED WITH AN ODEX SYSTEM BIT WAS USED TO ADVANCE BORING.
2. GROUNDWATER WAS ENCOUNTERED IN BORING 3 DURING DRILLING.
3. BORING LOCATIONS WERE TAPED FROM THE EXISTING BRIDGE ABUTMENTS. THE ELEVATION OF THE TOPS OF THE BORINGS WAS REFERENCED FROM THE BRIDGE DECK, WHICH WAS ASSUMED TO BE 100 FEET FOR DRAFTING PURPOSES.
4. RESULTS OF TESTS CONDUCTED ON SAMPLES RECOVERED ARE REPORTED ON THE LOGS.
5. THESE LOGS ARE SUBJECT TO THE LIMITATIONS, CONCLUSIONS, AND RECOMMENDATIONS CONTAINED IN THIS REPORT.
6. BORING B-4 WAS ADVANCED TO A DEPTH OF 44.5' USING A GEOPROBE 8140 LC DRILL RIG. THE REMAINDER OF THE BORING WAS CORED TO A DEPTH OF 56.8 FEET USING A DIEDRICH DRILL RIG WITH NX TOOLING.
7. BORING B-5 WAS ADVANCED TO A DEPTH OF 10.25' USING A GEOPROBE 8140 LC DRILL RIG.
8. BORING B-6 WAS ADVANCED TO A DEPTH OF 50' USING A TERRASONIC DRILL RIG.
9. TEST PITS TP-1, TP-2, TP-3 AND TP-4 WERE EXCAVATED TO DEPTHS OF 7' TO 8' USING A JOHN DEERE 856 TRACK-HOE.
10. NO GROUNDWATER WAS ENCOUNTERED IN THE BORINGS.

LEGEND:

SOIL SAMPLERS

- ROCK CORE
- BULK/GRAB SAMPLE
- STANDARD PENETRATION TEST

MISC. SYMBOLS

- BORING TERMINATED
- BORING CONTINUES

BORING LOGS ARE PROVIDED FOR INFORMATION ONLY AND ARE TAKEN FORM REPORT TITLED PRELIMINARY GEOTECHNICAL REPORT TOKUL CREEK BRIDGE #271B REPLACEMENT TOKUL ROAD SE (NEAR SE 53RD WAY) KING COUNTY, WASHINGTON DATED 10/7/2019.

811 Know what's below. Call before you dig.

SURVEY JOB NO:	19030	05/2019
CHECKED:	J. EVANS	08/2019
CAD ENTERED:	D. FOSTER	12/2020
DESIGNED:	A. CHARNESKI	12/2020
CHECKED:	E. FERLUGA	12/2020
SUPERVISOR:	S. SOISETH	12/2020

NUM.	REVISION	BY	DATE

DAVID EVANS AND ASSOCIATES INC.

PRELIMINARY

FED. AID No. N/A

PROJECT No. 1135999

SURVEY No. TBD

MAINTENANCE DIVISION No. 2

JOANN H. KOSA ENG. STATE OF WASHINGTON 34413 REGISTERED PROFESSIONAL ENGINEER

PRELIMINARY

60% DESIGN (NOT FOR CONSTRUCTION)

KING COUNTY DEPT. OF LOCAL SERVICES

JOHN TAYLOR, DIRECTOR

UPPER TOKUL CREEK BRIDGE #271B BRIDGE REPLACEMENT PROJECT

BORING LOGS 2 OF 2

King County

SHEET 23 OF 33 SHEETS

320-90 (EB05)

Drfo 12/02/20 3:28pm – P:\K\KCOX00000063\0400CAD\EB\SHEETS\EB-PR-004-KCOX0063.dwg

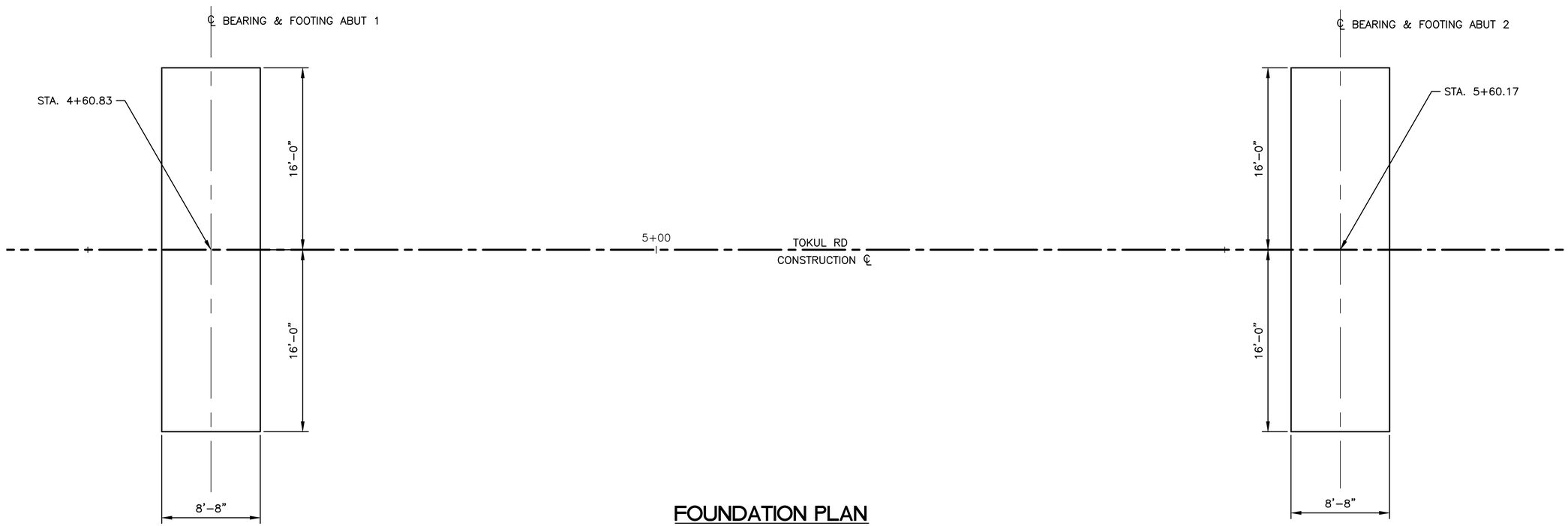

FOUNDATION PLAN

BEARING OF ABUTMENTS ARE NORMAL TO TOKUL RD CONSTRUCTION ℄

Know what's below.
Call before you dig.

SURVEY JOB NO: 19030	05/2019			
CHECKED: J. EVANS	08/2019			
CAD ENTERED: D. FOSTER	12/2020			
DESIGNED: A. CHARNESKI	12/2020			
CHECKED: E. FERLUGA	12/2020			
SUPERVISOR: S. SOISETH	12/2020			
		NUM. REVISION	BY	DATE

DAVID EVANS AND ASSOCIATES INC.

JACQUES PIERRE MAYNARD — STATE OF WASHINGTON — 52801 — STRUCTURAL ENGINEER — PROFESSIONAL ENGINEER — PRELIMINARY

FED. AID No. N/A

PROJECT No. 1135999

SURVEY No. TBD

MAINTENANCE DIVISION No. 2

JOANN H. KOSA — STATE OF WASHINGTON — 34413 — REGISTERED PROFESSIONAL ENGINEER — PRELIMINARY

60% DESIGN (NOT FOR CONSTRUCTION)

KING COUNTY DEPT. OF LOCAL SERVICES
JOHN TAYLOR, DIRECTOR

UPPER TOKUL CREEK BRIDGE #271B
BRIDGE REPLACEMENT PROJECT

FOUNDATION LAYOUT

King County

SHEET 24 OF 33 SHEETS

320-90 (EB06)

Drfo 12/02/20 3:29pm – P:\K\KCOX00000063\0400CAD\EB\SHEETS\EB-FP-001-KCOX0063.dwg

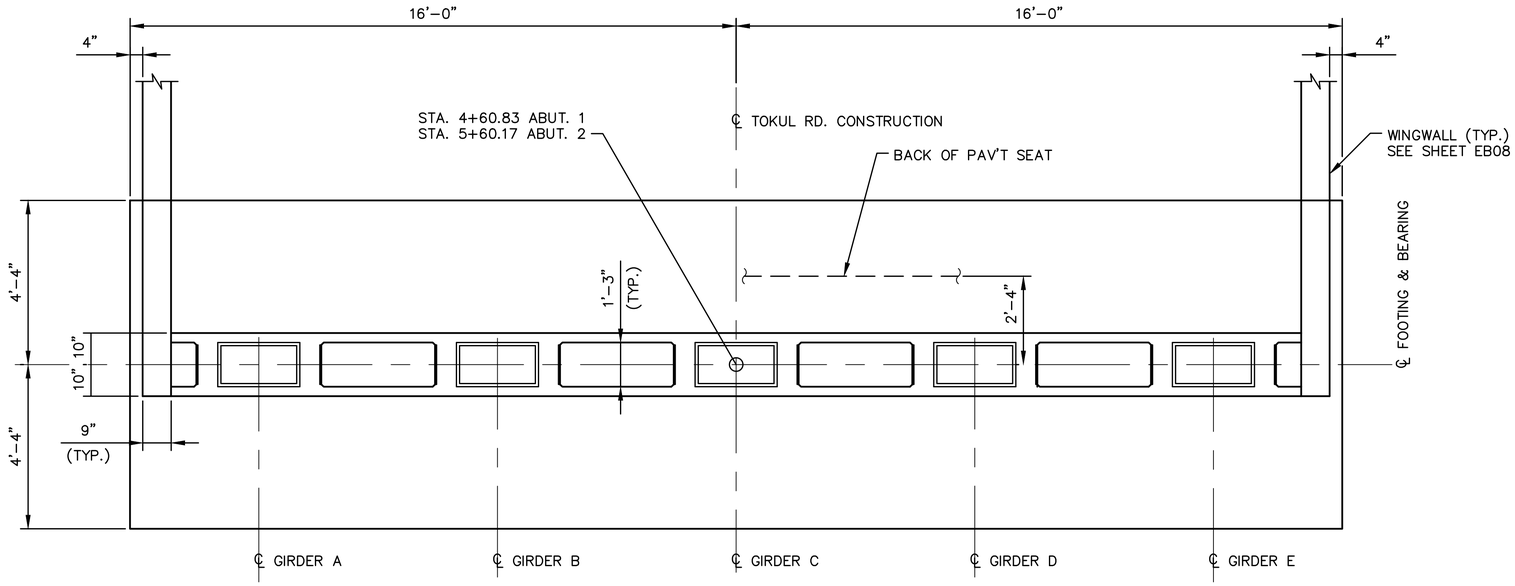

PLAN

ABUTMENT 2 SHOWN, ABUTMENT 1 MIRRORED
ABOUT ℄ FOOTING

TOP OF GROUT PAD ELEVATION

GIRDER	ABUT. 1 ELEV.	ABUT. 2 ELEV.
A	537.08'	533.10'
B	537.20'	533.23'
C	537.33'	533.35'
D	537.20'	533.23'
E	537.08'	533.10'

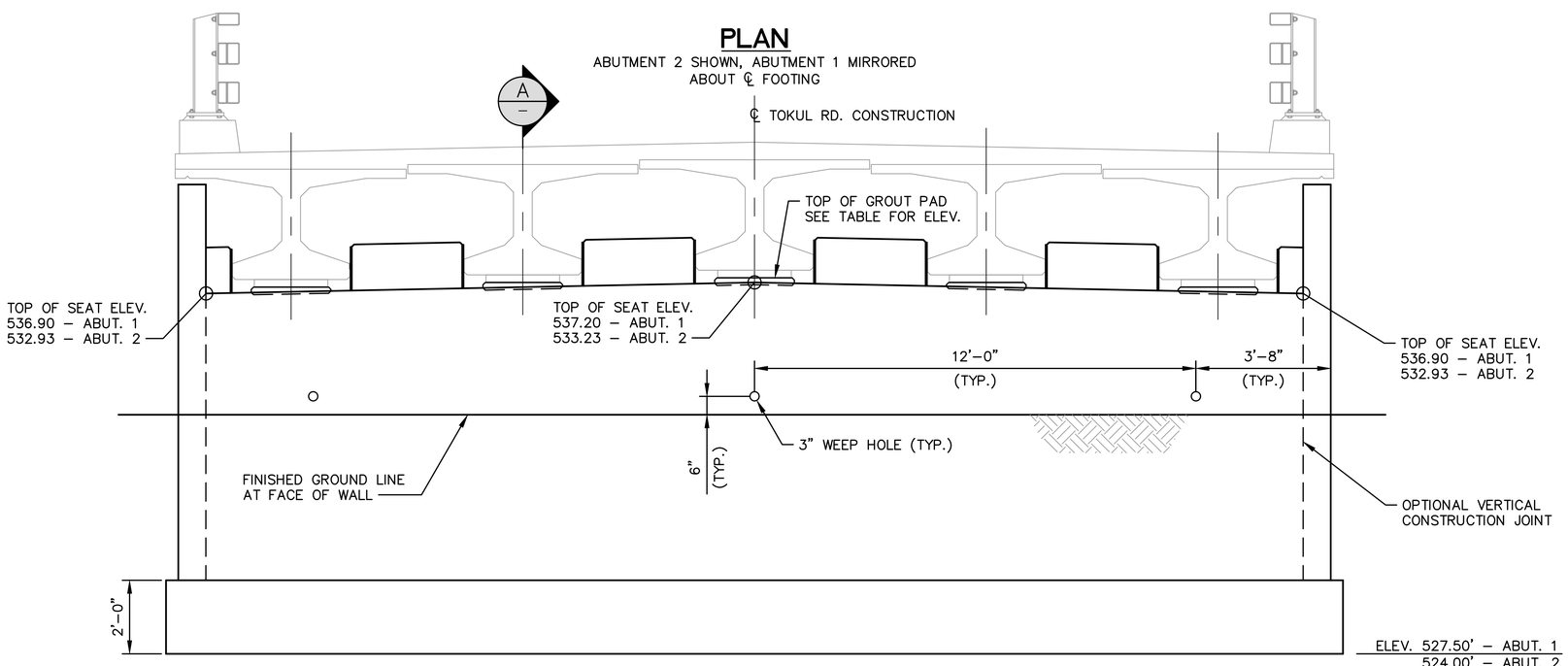

ELEVATION

ABUTMENT 2 SHOWN, ABUTMENT 1 MIRRORED ABOUT ℄ BRIDGE
(LOOKING BACK ON STATIONING)

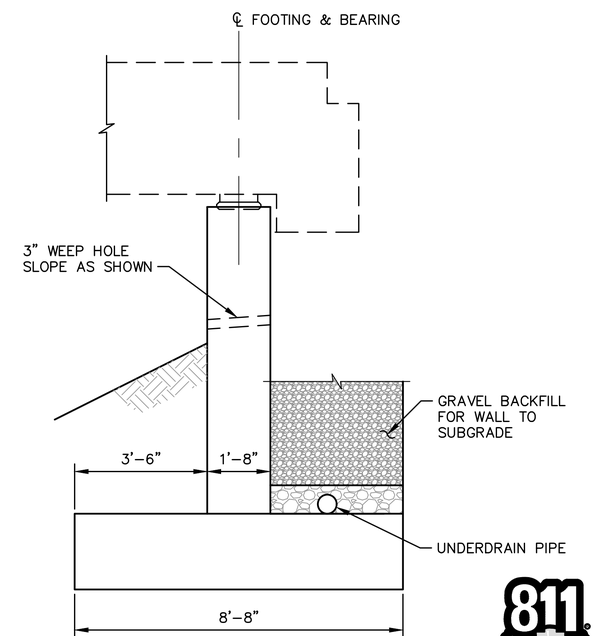

SECTION A

811 Know what's below. Call before you dig.

SURVEY JOB NO:	19030	05/2019
CHECKED:	J. EVANS	08/2019
CAD ENTERED:	D. FOSTER	12/2020
DESIGNED:	A. CHARNESKI	12/2020
CHECKED:	E. FERLUGA	12/2020
SUPERVISOR:	S. SOISETH	12/2020

NUM.	REVISION	BY	DATE

DAVID EVANS AND ASSOCIATES INC.

JACQUES PIERRE MAZARD — STATE OF WASHINGTON — 38801 — PROFESSIONAL ENGINEER — PRELIMINARY

FED. AID No. N/A
PROJECT No. 1135999
SURVEY No. TBD
MAINTENANCE DIVISION No. 2

JOANN H. KOSA — STATE OF WASHINGTON — 34413 — REGISTERED PROFESSIONAL ENGINEER — PRELIMINARY

60% DESIGN (NOT FOR CONSTRUCTION)

KING COUNTY DEPT. OF LOCAL SERVICES
JOHN TAYLOR, DIRECTOR

UPPER TOKUL CREEK BRIDGE #271B BRIDGE REPLACEMENT PROJECT

ABUTMENT DETAILS 1 OF 2

King County

SHEET 25 OF 33 SHEETS

320-90 (EB07)

Drfo 12/02/20 3:29pm – P:\K\KCOX00000063\0400CAD\EB\SHEETS\EB-PR-001-KCOX0063.dwg

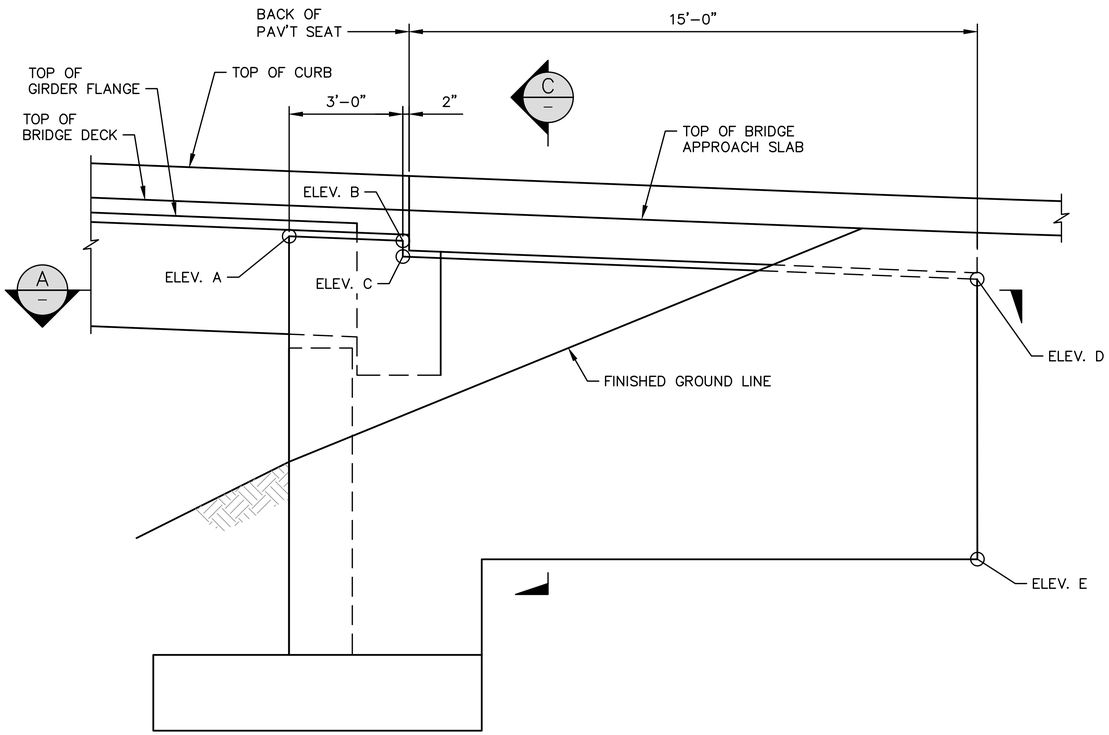

WINGWALL ELEVATION

ABUTMENT 2 RIGHT SHOWN, OTHERS SIMILAR

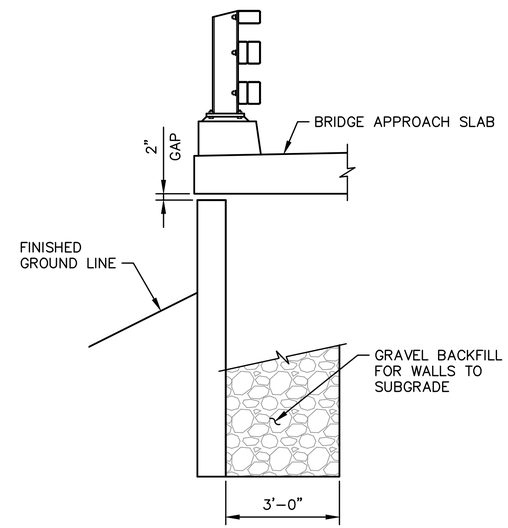

SECTION C

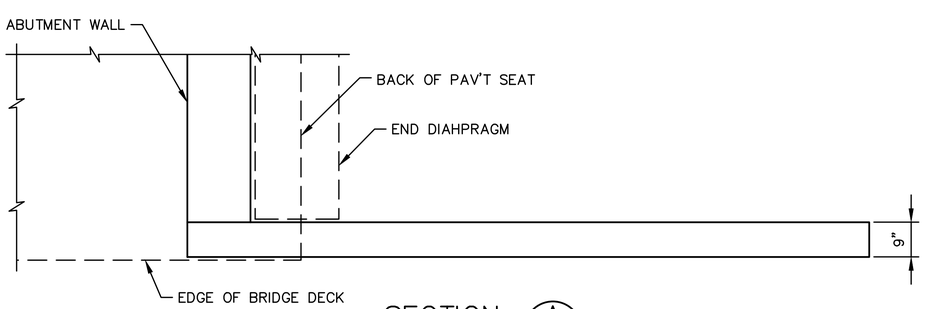

SECTION A

WING WALL ELEVATIONS

LOCATION	ELEV. A	ELEV. B	ELEV. C	ELEV. D	ELEV. E
ABUT. 1 LEFT	XXX.XX	XXX.XX	XXX.XX	XXX.XX	XXX.XX
ABUT. 1 RIGHT	XXX.XX	XXX.XX	XXX.XX	XXX.XX	XXX.XX
ABUT. 2 LEFT	XXX.XX	XXX.XX	XXX.XX	XXX.XX	XXX.XX
ABUT. 1 RIGHT	XXX.XX	XXX.XX	XXX.XX	XXX.XX	XXX.XX

WINGWALL ELEVATIONS MEASURED AT FAR FACE OF WALL

811 Know what's below. Call before you dig.

Drfo 12/02/20 3:30pm – P:\K\KCOX00000063\0400CAD\EB\SHEETS\EB-PR-002-KCOX0063.dwg

SURVEY JOB NO:	19030	05/2019			
CHECKED:	J. EVANS	08/2019			
CAD ENTERED:	D. FOSTER	12/2020			
DESIGNED:	A. CHARNESKI	12/2020			
CHECKED:	E. FERLUGA	12/2020			
SUPERVISOR:	S. SOISETH	12/2020			
			NUM. REVISION	BY	DATE

DAVID EVANS AND ASSOCIATES INC.

JACQUES PIERRE MAZARD — STATE OF WASHINGTON — 25601 — PROFESSIONAL ENGINEER — PRELIMINARY

FED. AID No. N/A

PROJECT No. 1135999

SURVEY No. TBD

MAINTENANCE DIVISION No. 2

JOANN H. KOSA — STATE OF WASHINGTON — 34413 — REGISTERED PROFESSIONAL ENGINEER — PRELIMINARY

60% DESIGN (NOT FOR CONSTRUCTION)

KING COUNTY DEPT. OF LOCAL SERVICES

JOHN TAYLOR, DIRECTOR

UPPER TOKUL CREEK BRIDGE #271B
BRIDGE REPLACEMENT PROJECT

ABUTMENT DETAILS 2 OF 2

King County

SHEET 26 OF 33 SHEETS

320-90 (EB08)

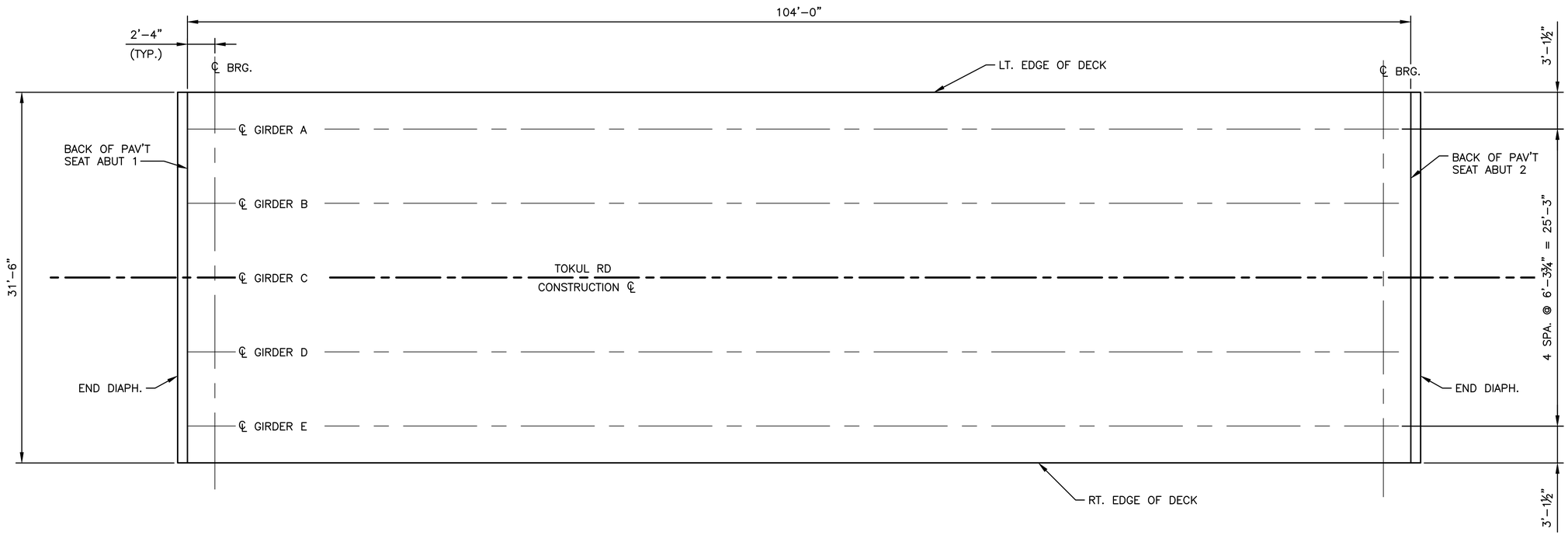

FRAMING PLAN

BEARINGS OF PIERS ARE NORMAL TO TOKUL RD. CONSTRUCTION ℄

Know what's below.
Call before you dig.

SURVEY JOB NO: 19030	05/2019			
CHECKED: J. EVANS	08/2019			
CAD ENTERED: D. FOSTER	12/2020			
DESIGNED: A. CHARNESKI	12/2020			
CHECKED: E. FERLUGA	12/2020			
SUPERVISOR: S. SOISETH	12/2020			
		NUM. REVISION	BY	DATE

DAVID EVANS AND ASSOCIATES INC.

JACQUES PIERRE MAZARD — STATE OF WASHINGTON — 22801 — REGISTERED PROFESSIONAL ENGINEER — PRELIMINARY

FED. AID No. N/A

PROJECT No. 1135999

SURVEY No. TBD

MAINTENANCE DIVISION No. 2

JOANN H. KOSA — STATE OF WASHINGTON — 34413 — REGISTERED PROFESSIONAL ENGINEER — PRELIMINARY

60% DESIGN (NOT FOR CONSTRUCTION)

KING COUNTY DEPT. OF LOCAL SERVICES

JOHN TAYLOR, DIRECTOR

UPPER TOKUL CREEK BRIDGE #271B
BRIDGE REPLACEMENT PROJECT

FRAMING PLAN

King County

SHEET 27 OF 33 SHEETS

320-90 (EB09)

Drfo 12/02/20 3:30pm – P:\K\KCOX00000063\0400CAD\EB\SHEETS\EB-FR-001-KCOX0063.dwg

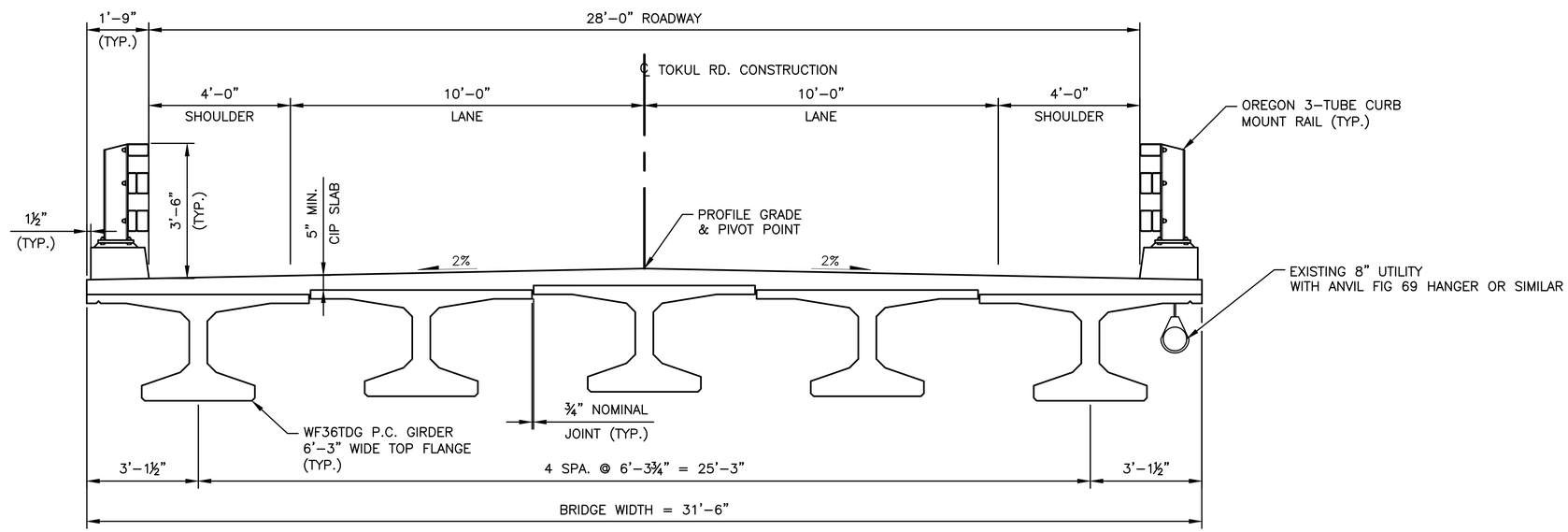

BRIDGE TYPICAL SECTION

SHOWN NEAR MIDSPAN

Know what's below.
Call before you dig.

SURVEY JOB NO:	19030	05/2019
CHECKED:	J. EVANS	08/2019
CAD ENTERED:	D. FOSTER	12/2020
DESIGNED:	A. CHARNESKI	12/2020
CHECKED:	E. FERLUGA	12/2020
SUPERVISOR:	S. SOISETH	12/2020

NUM.	REVISION	BY	DATE

DAVID EVANS AND ASSOCIATES INC.

JACQUES PIERRE MAYARD — STATE OF WASHINGTON — 22807 — REGISTERED PROFESSIONAL ENGINEER

FED. AID No. N/A

PROJECT No. 1135999

SURVEY No. TBD

MAINTENANCE DIVISION No. 2

JOANN H. KOSAKA — STATE OF WASHINGTON — 34413 — REGISTERED PROFESSIONAL ENGINEER

60% DESIGN (NOT FOR CONSTRUCTION)

KING COUNTY DEPT. OF LOCAL SERVICES

JOHN TAYLOR, DIRECTOR

UPPER TOKUL CREEK BRIDGE #271B
BRIDGE REPLACEMENT PROJECT

TYPICAL SECTION

King County

SHEET 28 OF 33 SHEETS

320-90 (EB10)

Drfo 12/02/20 3:31pm – P:\K\KCOX0000063\0400CAD\EB\SHEETS\EB-TS-001-KCOX0063.dwg

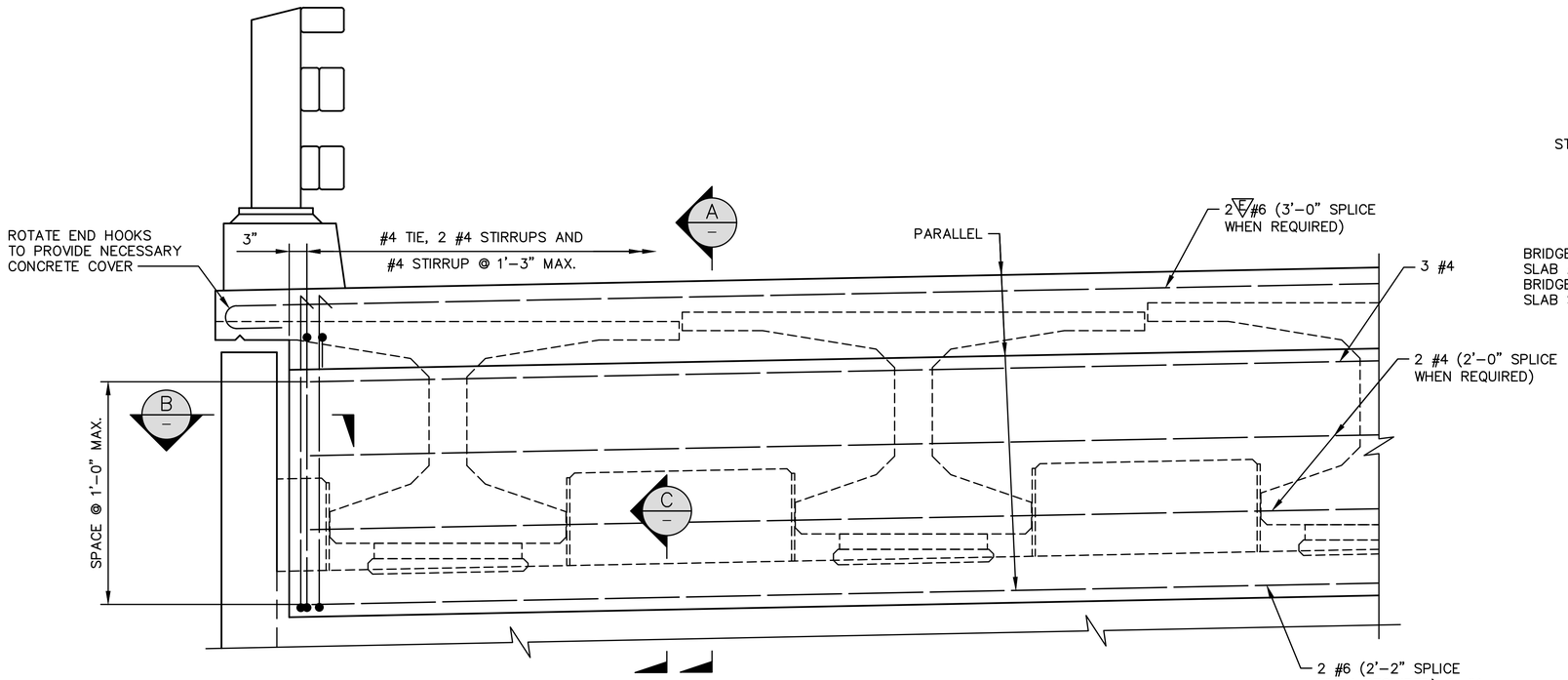

ELEVATION
END DIAPHRAGM

DIMENSIONS ARE ALONG ℄ DIAPHRAGM

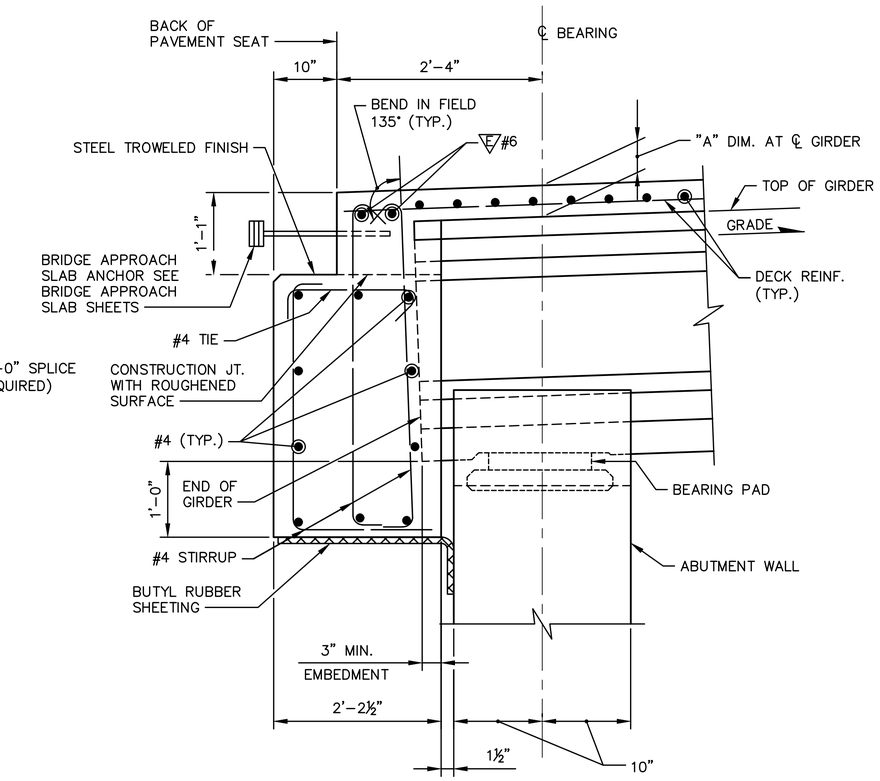

SECTION A

SEE GIRDER SHEETS FOR DIMENSION "A".
ALL LONGITUDINAL DIMENSIONS ARE NORMAL TO PIER WALL.

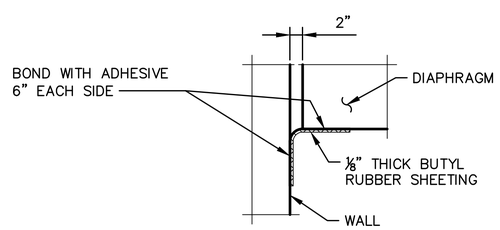

SECTION B

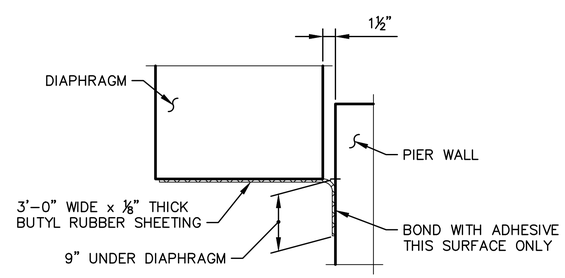

SECTION C

DIAPHRAGM NOTES:

1. GIRDERS SHALL BE HELD RIGIDLY IN PLACE WHEN DIAPHRAGMS ARE PLACED.
2. CUT/RELEASE GIRDER TEMPORARY STRANDS BEFORE CASTING DIAPHRAGM. SEE TEMPORARY STRAND CUTTING SEQUENCE.
3. EXTENDED STRANDS AND GIRDER REINFORCING NOT SHOWN FOR CLARITY.

811 Know what's below. Call before you dig.

SURVEY JOB NO: 19030	05/2019			
CHECKED: J. EVANS	08/2019			
CAD ENTERED: D. FOSTER	12/2020			
DESIGNED: A. CHARNESKI	12/2020			
CHECKED: E. FERLUGA	12/2020			
SUPERVISOR: S. SOISETH	12/2020			
		NUM. REVISION	BY	DATE

DAVID EVANS AND ASSOCIATES INC.

JACQUES PIERRE MARDIRAGA, STATE OF WASHINGTON, 22801, PROFESSIONAL ENGINEER — PRELIMINARY

FED. AID No. N/A
PROJECT No. 1135999
SURVEY No. TBD
MAINTENANCE DIVISION No. 2

JOANN H. KOSA, STATE OF WASHINGTON, 34413, REGISTERED PROFESSIONAL ENGINEER — PRELIMINARY

60% DESIGN (NOT FOR CONSTRUCTION)

KING COUNTY DEPT. OF LOCAL SERVICES
JOHN TAYLOR, DIRECTOR

UPPER TOKUL CREEK BRIDGE #271B
BRIDGE REPLACEMENT PROJECT

END DIAPHRAGM DETAILS

King County

SHEET 29 OF 33 SHEETS

320-90 (EB11)

Drfo 12/02/20 3:31pm – P:\K\KCOX00000063\0400CAD\EB\SHEETS\EB-DF-001-KCOX0063.dwg

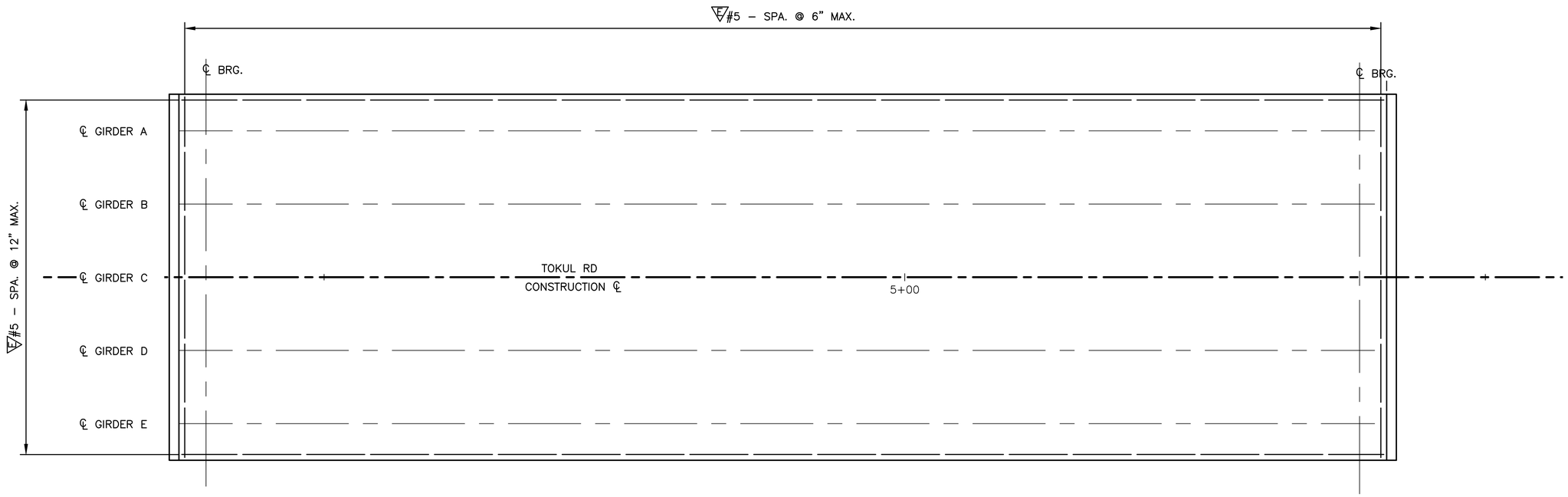

BRIDGE DECK REINFORCEMENT PLAN

Know what's below.
Call before you dig.

SURVEY JOB NO: 19030	05/2019			
CHECKED: J. EVANS	08/2019			
CAD ENTERED: D. FOSTER	12/2020			
DESIGNED: A. CHARNESKI	12/2020			
CHECKED: E. FERLUGA	12/2020			
SUPERVISOR: S. SOISETH	12/2020			
		NUM. REVISION	BY	DATE

DAVID EVANS AND ASSOCIATES INC.

JACQUES PIERRE MAZARD — STATE OF WASHINGTON — 22801 — STRUCTURAL ENGINEER — PROFESSIONAL ENGINEER — PRELIMINARY

FED. AID No. N/A

PROJECT No. 1135999

SURVEY No. TBD

MAINTENANCE DIVISION No. 2

JOANN H. KOSA — STATE OF WASHINGTON — 34413 — REGISTERED PROFESSIONAL ENGINEER — PRELIMINARY

60% DESIGN (NOT FOR CONSTRUCTION)

KING COUNTY DEPT. OF LOCAL SERVICES
JOHN TAYLOR, DIRECTOR

UPPER TOKUL CREEK BRIDGE #271B
BRIDGE REPLACEMENT PROJECT

DECK REINFORCING PLAN

King County

SHEET 30 OF 33 SHEETS

320-90 (EB12)

Drfo 12/02/20 3:32pm – P:\K\KCOX00000063\0400CAD\EB\SHEETS\EB-DP-001-KCOX0063.dwg

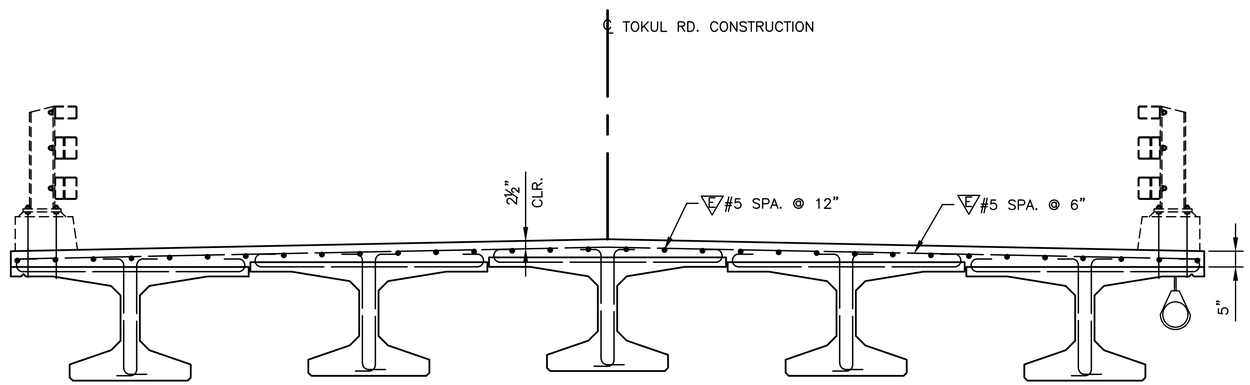

BRIDGE DECK TYPICAL SECTION

Know what's below.
Call before you dig.

SURVEY JOB NO:	19030	05/2019
CHECKED:	J. EVANS	08/2019
CAD ENTERED:	D. FOSTER	12/2020
DESIGNED:	A. CHARNESKI	12/2020
CHECKED:	E. FERLUGA	12/2020
SUPERVISOR:	S. SOISETH	12/2020

NUM.	REVISION	BY	DATE

DAVID EVANS AND ASSOCIATES INC.

JACQUES PIERRE MAZARD — STATE OF WASHINGTON — 25601 — STRUCTURAL ENGINEER — PROFESSIONAL ENGINEER — PRELIMINARY

FED. AID No. N/A

PROJECT No. 1135999

SURVEY No. TBD

MAINTENANCE DIVISION No. 2

JOANN H. KOSA — STATE OF WASHINGTON — 34413 — REGISTERED PROFESSIONAL ENGINEER — PRELIMINARY

60% DESIGN (NOT FOR CONSTRUCTION)

KING COUNTY DEPT. OF LOCAL SERVICES
JOHN TAYLOR, DIRECTOR

UPPER TOKUL CREEK BRIDGE #271B
BRIDGE REPLACEMENT PROJECT

DECK REINFORCING SECTION

King County

SHEET 31 OF 33 SHEETS

320-90 (EB13)

Drfo 12/02/20 3:32pm – P:\K\KCOX00000063\0400CAD\EB\SHEETS\EB-DD-001-KCOX0063.dwg

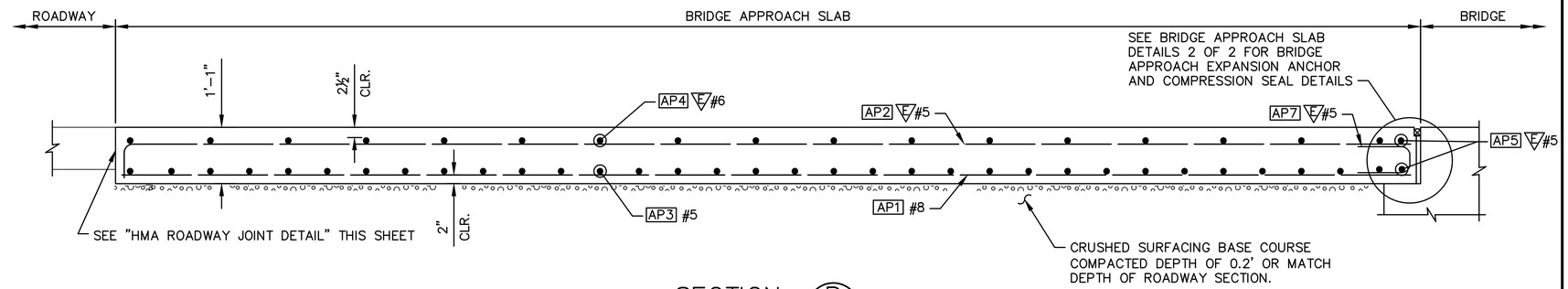

SECTION B

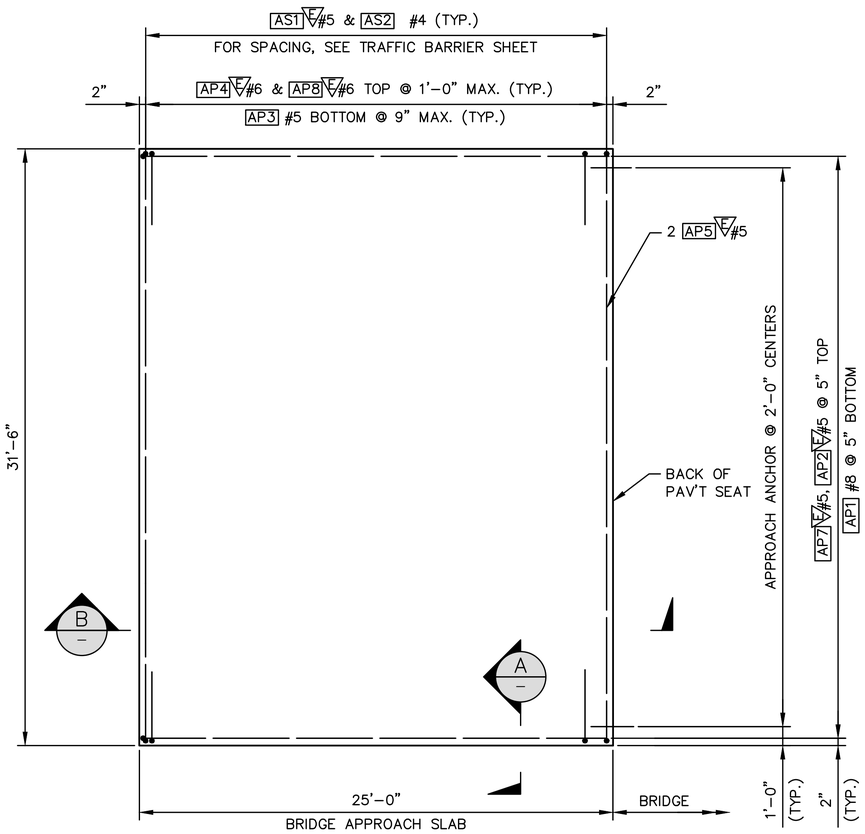

PLAN

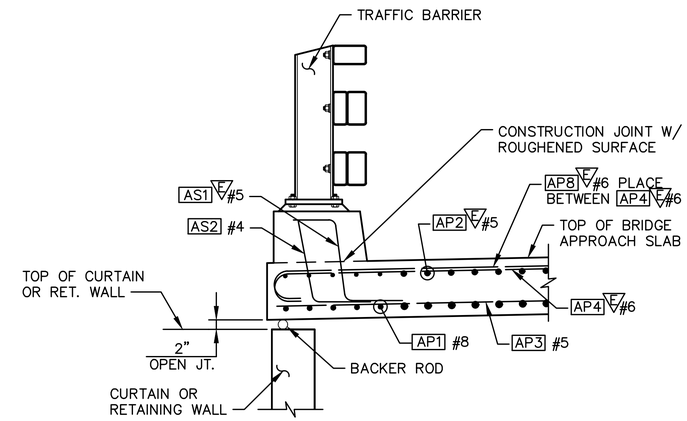

SECTION A

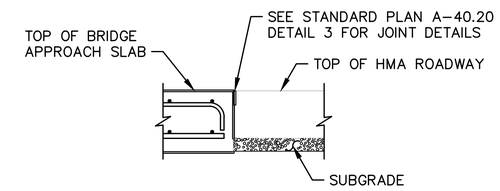

HMA ROADWAY JOINT DETAIL

GENERAL NOTES:

1. ALL EDGES OF BRIDGE APPROACH SLAB SHALL HAVE ½" RADIUS EXCEPT AT LONGITUDINAL JOINTS AND ADJACENT TO L-TYPE ABUTMENTS.
2. THE MINIMUM LAP SPLICE OF #5 IS 2'-0", E #5 IS 2'-6", E #6 IS 3'-0", AND #8 IS 3'-3". ALL LAP SPLICES SHALL BE STAGGERED SO THAT NO MORE THAN 50% OF REBAR IS SPLICED AT THE SAME LOCATION. LAP SPLICES SHALL BE LOCATED WITHIN THE MIDDLE HALF OF THE BRIDGE APPROACH SLAB. OPTIONAL SPLICES ARE ALLOWED FOR AP4 E #6.
3. FOR TRAFFIC BARRIER DETAILS, INCLUDING ANY BRIDGE APPROACH SLAB BLOCKOUT INFORMATION, SEE TRAFFIC BARRIER SHEETS.

BENDING DIAGRAM

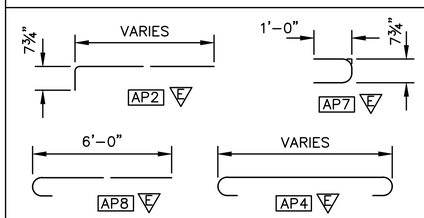

E = EPOXY COATED REINFORCING STEEL
NOTE: ALL DIMENSIONS ARE OUT TO OUT

811 Know what's below. Call before you dig.

Drfo 12/02/20 3:33pm – P:\K\KCOX00000063\0400CAD\EB\SHEETS\EB-EP-001-KCOX0063.dwg

SURVEY JOB NO: 19030	05/2019				
CHECKED: J. EVANS	08/2019				
CAD ENTERED: D. FOSTER	12/2020				
DESIGNED: A. CHARNESKI	12/2020				
CHECKED: E. FERLUGA	12/2020				
SUPERVISOR: S. SOISETH	12/2020				
		NUM.	REVISION	BY	DATE

DAVID EVANS AND ASSOCIATES INC.

PROFESSIONAL ENGINEER — JACQUES PIERRE MAYNARD — STATE OF WASHINGTON — 22801 — PRELIMINARY

FED. AID No. N/A
PROJECT No. 1135999
SURVEY No. TBD
MAINTENANCE DIVISION No. 2

PROFESSIONAL ENGINEER — JOANN H. KOSA — STATE OF WASHINGTON — 34413 — REGISTERED — PRELIMINARY

60% DESIGN (NOT FOR CONSTRUCTION)

KING COUNTY DEPT. OF LOCAL SERVICES
JOHN TAYLOR, DIRECTOR

UPPER TOKUL CREEK BRIDGE #271B
BRIDGE REPLACEMENT PROJECT

BRIDGE APPROACH SLAB DETAILS 1 OF 2

King County

SHEET 32 OF 33 SHEETS

320-90 (EB14)

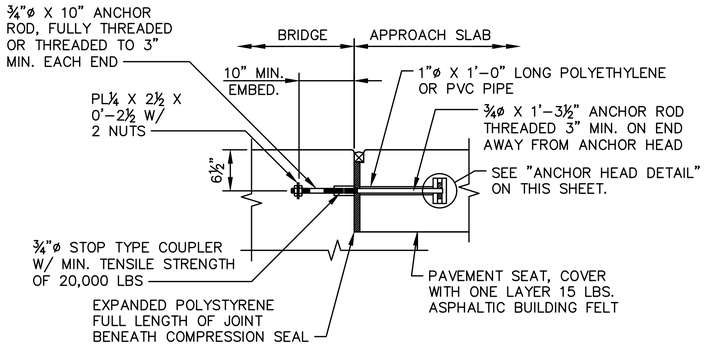

APPROACH ANCHOR - METHOD A

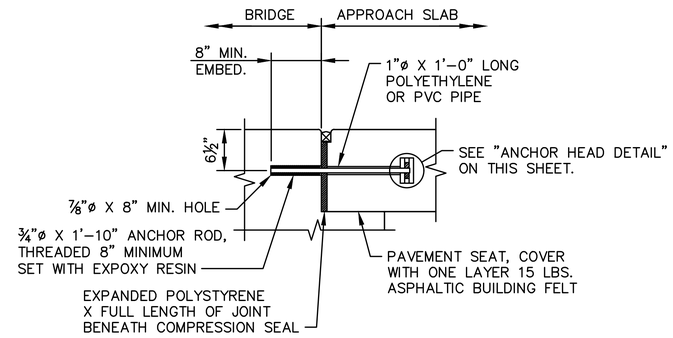

APPROACH ANCHOR - METHOD B

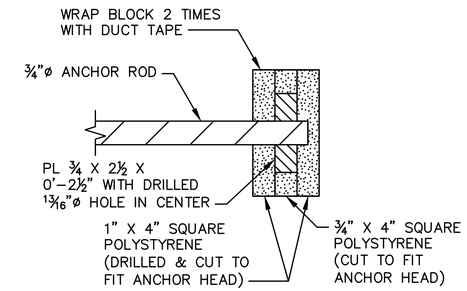

ANCHOR HEAD DETAIL

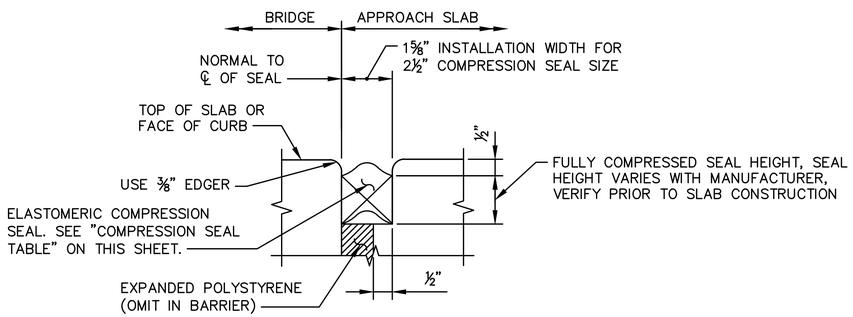

COMPRESSION SEAL DETAIL

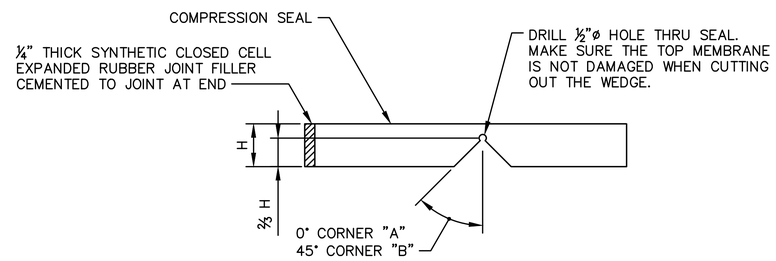

SEAL CUTTING DETAIL

COMPRESSION SEAL TABLE

D.S. BROWN		WATSON BOWMAN ACME	
SEAL	WIDTH	SEAL	WIDTH
CV-2502	2½"	WA-250	2½"

TESTING SHALL BE PER ASTM D 2628 PRIOR TO USE.

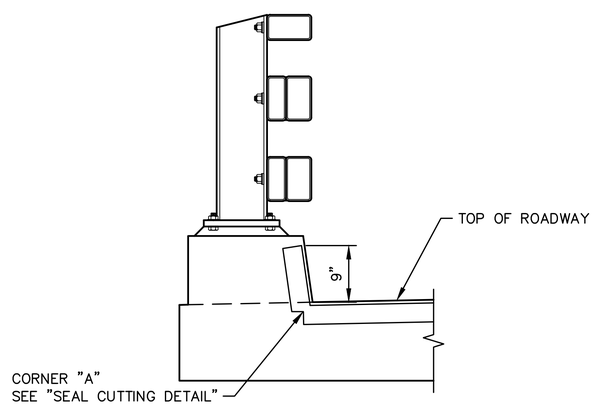

SECTION C

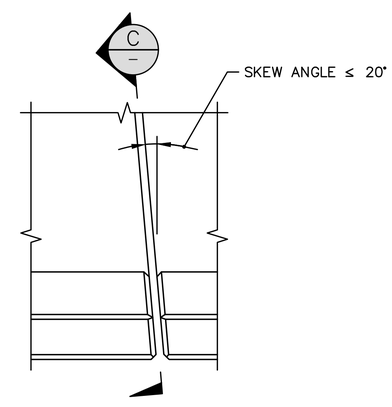

PLAN
EXPANSION JOINT

Know what's below.
Call before you dig.

SURVEY JOB NO:	19030	05/2019
CHECKED:	J. EVANS	08/2019
CAD ENTERED:	D. FOSTER	12/2020
DESIGNED:	A. CHARNESKI	12/2020
CHECKED:	E. FERLUGA	12/2020
SUPERVISOR:	S. SOISETH	12/2020

NUM.	REVISION	BY	DATE

DAVID EVANS AND ASSOCIATES INC.

PROFESSIONAL ENGINEER

FED. AID No. N/A
PROJECT No. 1135999
SURVEY No. TBD
MAINTENANCE DIVISION No. 2

PRELIMINARY

60% DESIGN (NOT FOR CONSTRUCTION)

KING COUNTY DEPT. OF LOCAL SERVICES
JOHN TAYLOR, DIRECTOR

UPPER TOKUL CREEK BRIDGE #271B
BRIDGE REPLACEMENT PROJECT

BRIDGE APPROACH SLAB DETAILS 2 OF 2

King County

SHEET 33 OF 33 SHEETS

320-90 (EB15)

Drfo 12/02/20 3:33pm – P:\K\KCOX00000063\0400CAD\EB\SHEETS\EB-EP-002-KCOX0063.dwg