Smith Monroe Gray
ENGINEERS, INC.

8625 SW Cascade Ave., Suite 600
BEAVERTON, OREGON 97008
PHONE 503.643.8595 FAX 503.643.8610

Sand Filter Structural Design

E. Moser

05/01/20

STRUCTURAL CALCULATIONS
FOR

18-183H

REV. 0

Lakeside Industries Maple Valley Asphalt Facility

SHEET 0 OF 22

CONTENTS:

	SHT. NO.
Project Description	1
Design Criteria	2
19.5 Ft. Wall Design	3
10 Ft. Wall Design	12

DESIGN REFERENCES:

ASCE 7-16
ACI 318-14

SUMMARY

Background:

A large sand filter will be constructed at the Maple Valley Asphalt Facility located in King County, Washington. A structural retaining wall must be designed to hold the contents of the sand filter. The back retaining wall will double as a sound wall.

Scope:

- Design all retaining walls that surround the sand filter

Design Parameters:

- See "Design Criteria"

Design Criteria

Soil Specifications

$\gamma_{soil} := 125\ pcf$ *Assumed in situ soil weight

$k_a := \frac{1}{3}$ *Assumed active soil coefficient

$\gamma_{sat} := 135\ pcf$ *Assumed saturated soil weight

$k_o := 2.8$ *Passive soil coefficient

$\gamma_{eq} := 85\ pcf$ *Assumed seismic soil pressure

$\mu_{slide} := 0.5$ *Soil criction coefficient

$\gamma_w := 62.4\ pcf$ *Weight of water

$\sigma_{allowable} := 3\ ksf$ *Allowable soil pressure

Wind

Risk Category II
Exposure category C
$V := 115$ mph [Fig 26.5-1A]
$K_z := 0.9$ [Table 29.3-1]
$K_{zt} := 1$ [Section 26.8.2]
$K_d := 0.9$ [Table 26.6-1]

$q_z := 0.00256\ K_z \cdot K_{zt} \cdot K_d \cdot V^2 \cdot \frac{lbf}{ft^2} = 27.42\ psf$ [EQ 29.3-1]

$G := 0.85$ [Section 26.9.1]
$C_f := 1.3$ [Fig. 29.5-1]

$F := q_z \cdot G \cdot C_f = 30.3\ psf$ [EQ 29.5-1]

Seismic Controls Design

Seismic Design Category D
$I_e := 1$ [Table 1.5-2]
$S_{DS} := 0.883$ [See Attached]
$S_{D1} := 0.496$ [See Attached]
$R := 3$ [Table 15.4-2]
$T_L := 16\ s$ [Fig. 22-12]

$C_t := 0.02$ [Table 12.8-2]
$x := 0.75$ [Table 12.8-2]
$h_n := 20$
$T_a := C_t \cdot h_n^{\ x} \cdot s = 0.19\ s$ [EQ 12.8-7]

$C_s := \frac{S_{DS}}{\frac{R}{I_e}} = 0.29$ [EQ 12.8-2]

$C_{s_max} := \frac{S_{D1} \cdot s}{T_a \cdot \left(\frac{R}{I_e}\right)} = 0.87$ [EQ 12.8-3]

$C_{s_min} := 0.044 \cdot S_{DS} \cdot I_e = 0.04$ [EQ 15.4-1]

DESIGN

Retaining/sound wall combination:

Wall specs

$B_{toe} := 3\ ft$ *Length of footing toe

$B_{heel} := 3\ ft$ *Length of heel

$T_{stem} := 12\ in$ *Thickness of stemwall

$T_{ftg} := 12\ in$ *Thickness of footing

$T_{key} := 1\ ft$ *Thickness of shear key

$H_{total} := 19.5\ ft$ *Total height of wall

$H_1 := 4.5\ ft$ *Height of active soil

$H_2 := 3\ ft$ *Height of passive soil

$H_w := 2.5\ ft$ *Height of water head above active soil

$H_{key} := 1\ ft$ *Height of shear key

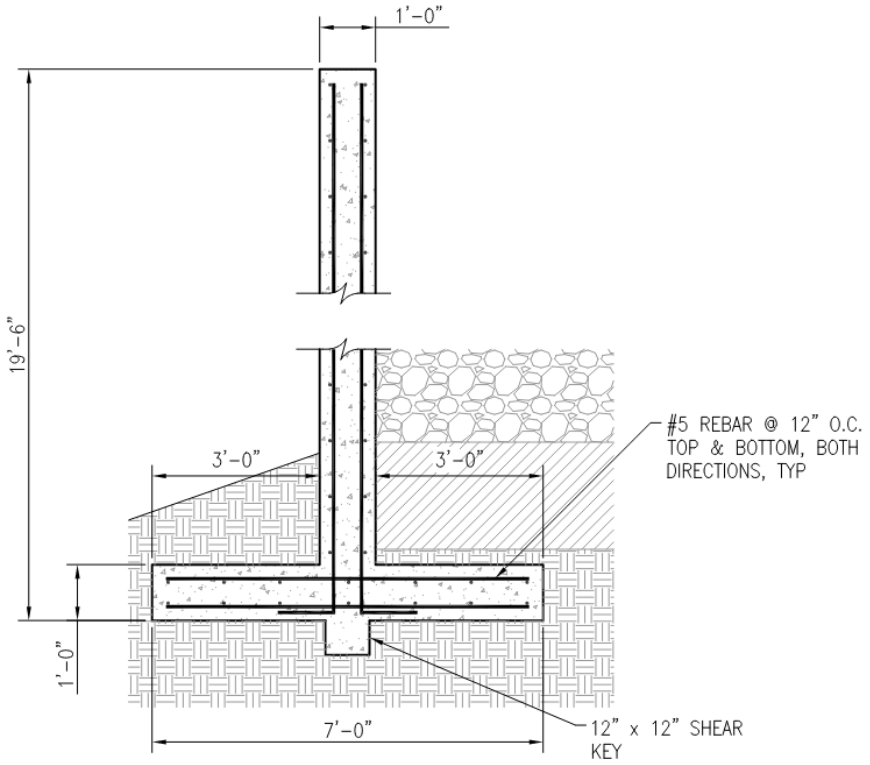

Check stability with submerged soil case

$B_{ftg} := B_{toe} + T_{stem} + B_{heel} = 7\ ft$ *Total length of footing

$w_{heel} := B_{heel} \cdot T_{ftg} \cdot 150\ pcf = 450\ plf$ *Weight of heel

$w_{toe} := B_{toe} \cdot T_{ftg} \cdot 150\ pcf = 450\ plf$ *Weight of toe

$w_{stem} := T_{stem} \cdot H_{total} \cdot 150\ pcf + T_{key} \cdot H_{key} \cdot 150\ pcf = 3075\ plf$ *Weight of stemwall

$w_{h_soil} := B_{heel} \cdot (H_1 - T_{ftg}) \cdot (\gamma_{sat} - \gamma_w) = 762.3\ plf$ *Weight of soil over heel

$w_{t_soil} := B_{toe} \cdot (H_2 - T_{ftg}) \cdot (\gamma_{sat} - \gamma_w) = 435.6\ plf$ *Weight of soil over toe

$V_{sub} := B_{ftg} \cdot T_{ftg} + T_{stem} \cdot (H_2 - T_{ftg}) + T_{key} \cdot H_{key} = 10\ \frac{ft^3}{ft}$ *Volume of footing submerged under water

Check Sliding: $1.0\ DL + 0.7\ EL + 1.0\ H$ ASD *Soil submerged case

$V_{pass} := \frac{1}{2}\gamma_w \cdot (H_2 + H_{key})^2 + \frac{1}{2} \cdot k_o \cdot (\gamma_{sat} - \gamma_w) \cdot (H_2 + H_{key})^2 = 2.13\ klf$ *Passive soil pressure

$V_{friction} := (w_{heel} + w_{toe} + w_{stem} + w_{h_soil} + w_{t_soil} - V_{sub} \cdot \gamma_w) \cdot \mu_{slide} = 2.27\ klf$ *Soil friction resistance

$V_{resist} := V_{friction} + V_{pass} = 4.4\ klf$ *Total sliding force resisted by wall

$V_{E_conc} := 0.7 \cdot (B_{ftg} \cdot T_{ftg} + T_{stem} \cdot (H_{total} - T_{ftg})) \cdot 150\ pcf \cdot C_s = 0.79\ klf$ *Seismic force on concrete

$V_{E_soil} := \frac{1}{2} \cdot 0.7 \cdot \gamma_{eq} \cdot H_1^2 - \frac{1}{2} \cdot 0.7 \cdot \gamma_{eq} \cdot H_2^2 = 0.33\ klf$ *Seismic force on soil

$V_{active} := \frac{1}{2} \cdot (k_a \cdot (\gamma_{sat} - \gamma_w)) \cdot H_1^2 + \frac{1}{2}\gamma_w \cdot (H_1 + H_w)^2 = 1.77\ klf$ *Active soil pressure

$V_{cause} := V_{E_soil} + V_{E_conc} + V_{active} = 2.9\ klf$ *Total sliding force acting on wall

$\frac{V_{resist}}{V_{cause}} = 1.52$ > 1.5 ok *Demand ratio for sliding

Check Overturning: $1.0\ DL + 0.7\ EL + 1.0\ H$ ASD *Soil submerged
*Moments taken about the front point of the toe

$M_{heel} := (w_{heel} + w_{h_soil}) \cdot \left(\frac{1}{2} \cdot B_{heel} + B_{toe} + T_{stem}\right) = 6.67\ \frac{kip \cdot ft}{ft}$

$M_{stem} := w_{stem} \cdot \left(\frac{1}{2} \cdot T_{stem} + B_{toe}\right) = 10.76\ \frac{kip \cdot ft}{ft}$

$$M_{toe} := \left(w_{toe} + w_{t_soil}\right) \cdot \left(\frac{1}{2} \cdot B_{toe}\right) = 1.33 \ \frac{kip \cdot ft}{ft}$$

$$M_{passive} := \left(\frac{1}{2} \gamma_w \cdot \left(H_2 + H_{key}\right)^2 + \frac{1}{2} \cdot k_o \cdot \left(\gamma_{sat} - \gamma_w\right) \cdot \left(H_2 + H_{key}\right)^2\right) \cdot \frac{1}{3} \cdot \left(H_2 + H_{key}\right) = 2.83 \ \frac{kip \cdot ft}{ft}$$

$$M_{resist} := M_{heel} + M_{stem} + M_{toe} + M_{passive} = 21.59 \ \frac{kip \cdot ft}{ft}$$

$$M_{E_concf} := 0.7 \cdot \left(B_{ftg} \cdot T_{ftg}\right) \cdot 150 \ pcf \cdot C_s \cdot \frac{1}{2} \cdot T_{ftg} = 0.11 \ \frac{kip \cdot ft}{ft}$$

$$M_{E_concs} := 0.7 \cdot \left(T_{stem} \cdot \left(H_{total} - T_{ftg}\right)\right) \cdot 150 \ pcf \cdot C_s \cdot \frac{1}{2} \cdot \left(H_{total} - T_{ftg}\right) = 5.29 \ \frac{kip \cdot ft}{ft}$$

$$M_{E_soil} := \frac{1}{2} \cdot 0.7 \cdot \gamma_{eq} \cdot H_1^{\ 2} \cdot \frac{1}{3} \cdot H_1 - \frac{1}{2} \cdot 0.7 \cdot \gamma_{eq} \cdot H_2^{\ 2} \cdot \frac{1}{3} \cdot H_2 = 0.64 \ \frac{kip \cdot ft}{ft}$$

$$M_{water} := \frac{1}{2} \cdot \gamma_w \cdot \left(H_1 + H_w\right)^2 \cdot \frac{1}{3} \cdot \left(H_1 + H_w\right) = 3.57 \ \frac{kip \cdot ft}{ft}$$

$$M_{active} := \frac{1}{2} \cdot \left(\frac{1}{3} \cdot \left(\gamma_{sat} - \gamma_w\right)\right) \cdot H_1^{\ 2} \cdot \frac{1}{3} \cdot H_1 = 0.37 \ \frac{kip \cdot ft}{ft}$$

$$M_{buoyant} := V_{sub} \cdot \gamma_w \cdot \frac{1}{2} B_{ftg} = 2.18 \ \frac{kip \cdot ft}{ft}$$ *Uplift of buoyant water force

$$M_{cause} := M_{E_concf} + M_{E_concs} + M_{E_soil} + M_{water} + M_{active} + M_{buoyant} = 12.15 \ \frac{kip \cdot ft}{ft}$$

$$\frac{M_{resist}}{M_{cause}} = 1.78 \quad > \quad 1.5 \quad ok$$ *Demand ratio for sliding

<u>Check Bearing Pressure</u> $1.0 \ DL + 0.7 \ EL + 1.0 \ H$ *Soil saturated case

Find total weight under condition above

$$w_{heel} := B_{heel} \cdot T_{ftg} \cdot 150 \ pcf = 450 \ plf$$ *Weight of heel

$$w_{toe} := B_{toe} \cdot T_{ftg} \cdot 150 \ pcf = 450 \ plf$$ *Weight of toe

$$w_{stem} := T_{stem} \cdot H_{total} \cdot 150 \ pcf + T_{key} \cdot H_{key} \cdot 150 \ pcf = 3075 \ plf$$ *Weight of stemwall

$w_{h_soil} := B_{heel} \cdot (H_1 - T_{ftg}) \cdot (\gamma_{sat}) = 1417.5\ plf$ *Weight of soil over heel

$w_{t_soil} := B_{toe} \cdot (H_2 - T_{ftg}) \cdot (\gamma_{sat}) = 810\ plf$ *Weight of soil over toe

$w_{total} := w_{heel} + w_{toe} + w_{stem} + w_{h_soil} + w_{t_soil} = 6.2\ klf$

Sum all moments about the heel edge:

$$M_{heel} := (w_{heel} + w_{h_soil}) \cdot \left(\frac{1}{2} \cdot B_{heel}\right) = 2.8\ \frac{kip \cdot ft}{ft}$$

$$M_{stem} := w_{stem} \cdot \left(\frac{1}{2} \cdot T_{stem} + B_{heel}\right) = 10.76\ \frac{kip \cdot ft}{ft}$$

$$M_{toe} := (w_{toe} + w_{t_soil}) \cdot \left(\frac{1}{2} \cdot B_{toe} + T_{stem} + B_{heel}\right) = 6.93\ \frac{kip \cdot ft}{ft}$$

$$M_{passive} := -\left(\frac{1}{2} \cdot k_o \cdot \gamma_{sat} \cdot H_2^{\ 2}\right) \cdot \frac{1}{3} \cdot (H_2) = -1.7\ \frac{kip \cdot ft}{ft}$$

$$M_{E_concf} := 0.7 \cdot (B_{ftg} \cdot T_{ftg}) \cdot 150\ pcf \cdot C_s \cdot \frac{1}{2} \cdot T_{ftg} = 0.11\ \frac{kip \cdot ft}{ft}$$

$$M_{E_concs} := 0.7 \cdot (T_{stem} \cdot (H_{total} - T_{ftg})) \cdot 150\ pcf \cdot C_s \cdot \frac{1}{2} \cdot (H_{total} - T_{ftg}) = 5.29\ \frac{kip \cdot ft}{ft}$$

$$M_{E_soil} := \frac{1}{2} \cdot 0.7 \cdot \gamma_{eq} \cdot H_1^{\ 2} \cdot \frac{1}{3} \cdot H_1 - \frac{1}{2} \cdot 0.7 \cdot \gamma_{eq} \cdot H_2^{\ 2} \cdot \frac{1}{3} \cdot H_2 = 0.64\ \frac{kip \cdot ft}{ft}$$

$$M_{active} := \frac{1}{2} \cdot k_a \cdot \gamma_{sat} \cdot H_1^{\ 2} \cdot \frac{1}{3} \cdot H_1 = 0.68\ \frac{kip \cdot ft}{ft}$$

$$M_a := M_{heel} + M_{stem} + M_{toe} + M_{passive} + M_{E_concf} + M_{E_concs} + M_{E_soil} + M_{active} = 26\ \frac{kip \cdot ft}{ft}$$

$$e := \frac{M_a}{w_{total}} - \frac{B_{ftg}}{2} = 0.61\ ft \quad < \quad \frac{B_{ftg}}{6} = 1.17\ ft$$ *Inside kern

$$\sigma_{max} := \frac{w_{total}}{B_{ftg}} + \frac{w_{total} \cdot e}{\frac{1}{6} B_{ftg}^{\ 2}} = 1.35\ ksf \quad < \quad \sigma_{allowable} = 3\ ksf \quad ok$$

Check Bearing Pressure $1.0\ DL + 0.7\ EL + 1.0\ H$ *Soil submerged case

Find total weight under condition above

$w_{heel} := B_{heel} \cdot T_{ftg} \cdot 150\ pcf = 450\ plf$ *Weight of heel t

$w_{toe} := B_{toe} \cdot T_{ftg} \cdot 150\ pcf = 450\ plf$ *Weight of toe

$w_{stem} := T_{stem} \cdot H_{total} \cdot 150\ pcf + T_{key} \cdot H_{key} \cdot 150\ pcf = 3075\ plf$ *Weight of stemwall

$w_{h_soil} := B_{heel} \cdot (H_1 - T_{ftg}) \cdot (\gamma_{sat} - \gamma_w) = 762.3\ plf$ *Weight of soil over heel

$w_{t_soil} := B_{toe} \cdot (H_2 - T_{ftg}) \cdot (\gamma_{sat} - \gamma_w) = 435.6\ plf$ *Weight of soil over toe

$w_{total} := w_{heel} + w_{toe} + w_{stem} + w_{h_soil} + w_{t_soil} - V_{sub} \cdot \gamma_w = 4.55\ klf$

Sum all moments about the heel edge:

$$M_{heel} := (w_{heel} + w_{h_soil}) \cdot \left(\frac{1}{2} \cdot B_{heel}\right) = 1.82\ \frac{kip \cdot ft}{ft}$$

$$M_{stem} := w_{stem} \cdot \left(\frac{1}{2} \cdot T_{stem} + B_{heel}\right) = 10.76\ \frac{kip \cdot ft}{ft}$$

$$M_{toe} := (w_{toe} + w_{t_soil}) \cdot \left(\frac{1}{2} \cdot B_{toe} + T_{stem} + B_{heel}\right) = 4.87\ \frac{kip \cdot ft}{ft}$$

$$M_{passive} := -\left(\frac{1}{2} \cdot k_o \cdot (\gamma_{sat} - \gamma_w) \cdot H_2^{\ 2} + \frac{1}{2} \cdot \gamma_w \cdot H_2^{\ 2}\right) \cdot \frac{1}{3} \cdot (H_2) = -1.2\ \frac{kip \cdot ft}{ft}$$

$$M_{buoyant} := -V_{sub} \cdot \gamma_w \cdot \frac{B_{ftg}}{2} = -2.18\ \frac{kip \cdot ft}{ft}$$

$$M_{E_concf} := 0.7 \cdot (B_{ftg} \cdot T_{ftg}) \cdot 150\ pcf \cdot C_s \cdot \frac{1}{2} \cdot T_{ftg} = 0.11\ \frac{kip \cdot ft}{ft}$$

$$M_{E_concs} := 0.7 \cdot (T_{stem} \cdot (H_{total} - T_{ftg})) \cdot 150\ pcf \cdot C_s \cdot \frac{1}{2} \cdot (H_{total} - T_{ftg}) = 5.29\ \frac{kip \cdot ft}{ft}$$

$$M_{E_soil} := \frac{1}{2} \cdot 0.7 \cdot \gamma_{eq} \cdot H_1^{\ 2} \cdot \frac{1}{3} \cdot H_1 - \frac{1}{2} \cdot 0.7 \cdot \gamma_{eq} \cdot H_2^{\ 2} \cdot \frac{1}{3} \cdot H_2 = 0.64\ \frac{kip \cdot ft}{ft}$$

$$M_{active} := \left(\frac{1}{2} \cdot k_a \cdot (\gamma_{sat} - \gamma_w) \cdot H_1^{\,2}\right) \cdot \frac{1}{3} \cdot (H_2) + \left(\frac{1}{2} \cdot \gamma_w \cdot (H_1 + H_w)^2\right) \cdot \frac{1}{3} \cdot (H_1 + H_w) = 3.81 \ \frac{kip \cdot ft}{ft}$$

$$M_a := M_{heel} + M_{stem} + M_{toe} + M_{passive} + M_{buoyant} + M_{E_concf} + M_{E_concs} + M_{E_soil} + M_{active} = 24 \ \frac{kip \cdot ft}{ft}$$

$$e := \frac{M_a}{w_{total}} - \frac{B_{ftg}}{2} = 1.76 \ ft \quad > \quad \frac{B_{ftg}}{6} = 1.17 \ ft$$ *Outside kern

$$\sigma_{max} := \frac{2 \cdot w_{total}}{3 \cdot \left(\frac{B_{ftg}}{2} - e\right)} = 1.74 \ ksf \quad < \quad \sigma_{allowable} = 3 \ ksf \quad ok$$ *Submerged controls

<u>Concrete Strength - Footing</u> $1.2 \ DL + 1.0 \ EL + 1.6 \ H \quad LRFD$

Find total weight under condition above

$$w_{heel} := 1.2 \cdot B_{heel} \cdot T_{ftg} \cdot 150 \ pcf = 540 \ plf$$ *Weight of heel

$$w_{toe} := 1.2 \cdot B_{toe} \cdot T_{ftg} \cdot 150 \ pcf = 540 \ plf$$ *Weight of toe

$$w_{stem} := 1.2 \cdot T_{stem} \cdot H_{total} \cdot 150 \ pcf + T_{key} \cdot H_{key} \cdot 150 \ pcf = 3660 \ plf$$ *Weight of stemwall

$$w_{h_soil} := 1.2 \cdot B_{heel} \cdot (H_1 - T_{ftg}) \cdot (\gamma_{sat} - \gamma_w) = 914.76 \ plf$$ *Weight of soil over heel

$$w_{t_soil} := 1.2 \cdot B_{toe} \cdot (H_2 - T_{ftg}) \cdot (\gamma_{sat} - \gamma_w) = 522.72 \ plf$$ *Weight of soil over toe

$$w_{total} := w_{heel} + w_{toe} + w_{stem} + w_{h_soil} + w_{t_soil} - 1.2 \cdot V_{sub} \cdot \gamma_w = 5.43 \ klf$$

Sum all moments about the heel edge:

$$M_{heel} := (w_{heel} + w_{h_soil}) \cdot \left(\frac{1}{2} \cdot B_{heel}\right) = 2.18 \ \frac{kip \cdot ft}{ft}$$

$$M_{stem} := w_{stem} \cdot \left(\frac{1}{2} \cdot T_{stem} + B_{heel}\right) = 12.81 \ \frac{kip \cdot ft}{ft}$$

$$M_{toe} := (w_{toe} + w_{t_soil}) \cdot \left(\frac{1}{2} \cdot B_{toe} + T_{stem} + B_{heel}\right) = 5.84 \ \frac{kip \cdot ft}{ft}$$

$$M_{passive} := -1.6 \cdot \left(\frac{1}{2} \cdot k_o \cdot (\gamma_{sat} - \gamma_w) \cdot H_2^{\,2} + \frac{1}{2} \cdot \gamma_w \cdot H_2^{\,2}\right) \cdot \frac{1}{3} \cdot (H_2) = -1.91 \ \frac{kip \cdot ft}{ft}$$

$$M_{buoyant} := -1.2 \cdot V_{sub} \cdot \gamma_w \cdot \frac{B_{ftg}}{2} = -2.62 \ \frac{kip \cdot ft}{ft}$$

$$M_{E_concf} := \left(B_{ftg} \cdot T_{ftg}\right) \cdot 150 \ pcf \cdot C_s \cdot \frac{1}{2} \cdot T_{ftg} = 0.15 \ \frac{kip \cdot ft}{ft}$$

$$M_{E_concs} := \left(T_{stem} \cdot \left(H_{total} - T_{ftg}\right)\right) \cdot 150 \ pcf \cdot C_s \cdot \frac{1}{2} \cdot \left(H_{total} - T_{ftg}\right) = 7.56 \ \frac{kip \cdot ft}{ft}$$

$$M_{E_soil} := \frac{1}{2} \cdot \gamma_{eq} \cdot H_1^{\ 2} \cdot \frac{1}{3} \cdot H_1 - \frac{1}{2} \cdot \gamma_{eq} \cdot H_2^{\ 2} \cdot \frac{1}{3} \cdot H_2 = 0.91 \ \frac{kip \cdot ft}{ft}$$

$$M_{active} := 1.6 \cdot \left(\frac{1}{2} \cdot k_a \cdot \left(\gamma_{sat} - \gamma_w\right) \cdot H_1^{\ 2} + \frac{1}{2} \cdot \gamma_w \cdot H_1^{\ 2}\right) \cdot \frac{1}{3} \cdot \left(H_1\right) = 2.1 \ \frac{kip \cdot ft}{ft}$$

$$M_u := M_{heel} + M_{stem} + M_{toe} + M_{passive} + M_{buoyant} + M_{E_concf} + M_{E_concs} + M_{E_soil} + M_{active} = 27 \ \frac{kip \cdot ft}{ft}$$

$$e := \frac{M_u}{w_{total}} - \frac{B_{ftg}}{2} = 1.48 \ ft \qquad > \qquad \frac{B_{ftg}}{6} = 1.17 \ ft$$ *Outside kern

$$\sigma_{max} := \frac{2 \cdot w_{total}}{3 \cdot \left(\frac{B_{ftg}}{2} - e\right)} = 1.79 \ ksf$$

Material Properties:

$b := 12 \ in$ $\quad d := 9 \ in$ $\quad h := 12 \ in$

$a := 0.248 \ in$ *Iterative $\quad f'c := 4 \ ksi$ $\quad x := 3 \ ft$ *Point of max bending

$\phi := 0.9$ $\quad f_y := 60 \ ksi$

Bending: (Foundation with uplift when 3m > x)

$$M_u := w_{total} \cdot e = 8.03 \ \frac{kip \cdot ft}{ft}$$
$$P_u := w_{total} = 5.43 \ klf$$

$$m := \left(\frac{B_{ftg}}{2} - e\right) = 2.02 \ ft$$

$3 \cdot m = 6.06 \ ft$ *Length of stress reaction

$$\sigma_x := \frac{\sigma_{max} \cdot (3 \cdot m - x)}{3 \cdot m} = 904.68\ psf$$ *Pressure at point of max bending

$$M_u := \left(\sigma_x \cdot \frac{x^2}{2}\right) \cdot b + \frac{1}{3} \cdot (\sigma_{max} - \sigma_x) \cdot x^2 \cdot b = 6.7\ ft \cdot kip$$

Steel Required:

$$A_s := \frac{(M_u)}{\left(\phi \cdot f_y \cdot \left(d - \frac{a}{2}\right)\right)} = 0.168\ in^2$$

$$a := \frac{(A_s \cdot f_y)}{(0.85 \cdot f'c \cdot b)} = 0.248\ in$$

$$A_{smin} := b \cdot h \cdot 0.0018 = 0.26\ in^2$$

Use No. 5 bars at 12" O/C ---> $A_{sreq.} := 0.31\ in^2$

$$\rho := \frac{A_{sreq.}}{b \cdot d} = 0.003$$ < 0.018 ok $\phi = 0.9$

Shear:

$\phi := 0.75$ $\lambda := 1$

$$V_u := (\sigma_x \cdot x) + \frac{1}{2} \cdot (\sigma_{max} - \sigma_x) \cdot x = 4\ klf$$

$$V_c := 2 \cdot \lambda \cdot \sqrt{f'c \cdot psi} \cdot d = 13.66\ klf$$

$$\phi V_n := \frac{1}{2}\ \phi \cdot V_c = 5.1\ klf$$

$\phi V_n > V_u$ *OK*

<u>Concrete Strength - Stemwall</u> $1.2\ DL + 1.0\ EL + 1.6\ H$ *LRFD*

$$M_{passive} := -1.6 \cdot \left(\frac{1}{2} \cdot k_o \cdot (\gamma_{sat} - \gamma_w) \cdot (H_2 - T_{ftg})^2 + \frac{1}{2} \cdot \gamma_w \cdot (H_2 - T_{ftg})^2\right) \cdot \frac{1}{3} \cdot (H_2 - T_{ftg}) = -0.57\ \frac{kip \cdot ft}{ft}$$

$$M_{E_concs} := (T_{stem} \cdot (H_{total} - T_{ftg})) \cdot 150\ pcf \cdot C_s \cdot \frac{1}{2} \cdot (H_{total} - T_{ftg}) = 7.56\ \frac{kip \cdot ft}{ft}$$

$$M_{E_soil} := \frac{1}{2} \cdot \gamma_{eq} \cdot (H_1 - T_{ftg})^2 \cdot \frac{1}{3} \cdot (H_1 - T_{ftg}) - \frac{1}{2} \cdot \gamma_{eq} \cdot (H_2 - T_{ftg})^2 \cdot \frac{1}{3} \cdot (H_2 - T_{ftg}) = 0.49\ \frac{kip \cdot ft}{ft}$$

$$M_{active} := 1.6 \cdot \left(\frac{1}{2} \cdot k_a \cdot (\gamma_{sat} - \gamma_w) \cdot (H_1 - T_{ftg})^2 + \frac{1}{2} \cdot \gamma_w \cdot (H_1 - T_{ftg})^2 \right) \cdot \frac{1}{3} \cdot (H_1 - T_{ftg}) = 0.99 \ \frac{kip \cdot ft}{ft}$$

$$M_u := M_{passive} + M_{E_concs} + M_{E_soil} + M_{active} = 8.47 \ \frac{kip \cdot ft}{ft}$$

$$V_{passive} := -1.6 \cdot \left(\frac{1}{2} \cdot k_o \cdot (\gamma_{sat} - \gamma_w) \cdot (H_2 - T_{ftg})^2 + \frac{1}{2} \cdot \gamma_w \cdot (H_2 - T_{ftg})^2 \right) = -0.85 \ klf$$

$$V_{E_concs} := (T_{stem} \cdot (H_{total} - T_{ftg})) \cdot 150 \ pcf \cdot C_s = 0.82 \ klf$$

$$V_{E_soil} := \frac{1}{2} \cdot \gamma_{eq} \cdot (H_1 - T_{ftg})^2 - \frac{1}{2} \cdot \gamma_{eq} \cdot (H_2 - T_{ftg})^2 = 0.35 \ klf$$

$$V_{active} := 1.6 \cdot \left(\frac{1}{2} \cdot k_a \cdot (\gamma_{sat} - \gamma_w) \cdot (H_1 - T_{ftg})^2 + \frac{1}{2} \cdot \gamma_w \cdot (H_1 - T_{ftg})^2 \right) = 0.85 \ klf$$

$$V_u := V_{passive} + V_{E_concs} + V_{E_soil} + V_{active} = 1.17 \ klf$$

Material Properties:

$b := 12 \ in$ $d := 9 \ in$ $h := 12 \ in$

$a := 0.313 \ in$ *Iterative $f'c := 4 \ ksi$ $f_y := 60 \ ksi$

$\phi := 0.9$

Steel Required:

$$A_s := \frac{(M_u) \cdot b}{\left(\phi \cdot f_y \cdot \left(d - \frac{a}{2} \right) \right)} = 0.213 \ in^2$$

$$a := \frac{(A_s \cdot f_y)}{(0.85 \cdot f'c \cdot b)} = 0.313 \ in$$ *Iterative

$$A_{smin} := b \cdot h \cdot 0.0018 = 0.26 \ in^2$$

Use No. 5 bars at 12" O/C ---> $A_{sreq.} := 0.31 \ in^2$

$\rho := \frac{A_{sreq.}}{b \cdot d} = 0.003$ < 0.018 ok $\phi = 0.9$

Shear:

$\phi := 0.75$ $\lambda := 1$

$V_u = 1.2\ klf$

$V_c := 2 \cdot \lambda \cdot \sqrt{f'c \cdot psi} \cdot d = 13.66\ klf$

$\phi V_n := \frac{1}{2}\ \phi \cdot V_c = 5.1\ klf$

$\phi V_n > V_u$ OK

Retaining wall with vehicle surcharge:

Wall specs

$B_{toe} := 1.5\ ft$ *Length of footing toe

$B_{heel} := 2\ ft$ *Length of heel

$T_{stem} := 12\ in$ *Thickness of stemwall

$T_{ftg} := 12\ in$ *Thickness of footing

$T_{key} := 0\ ft$ *Thickness of shear key

$H_{total} := 10\ ft$ *Total height of wall

$H_1 := 8\ ft$ *Height of active soil

$H_2 := 6.5\ ft$ *Height of passive soil

$H_w := 2.5\ ft$ *Height of water head above active soil

$H_{key} := 0\ ft$ *Height of shear key

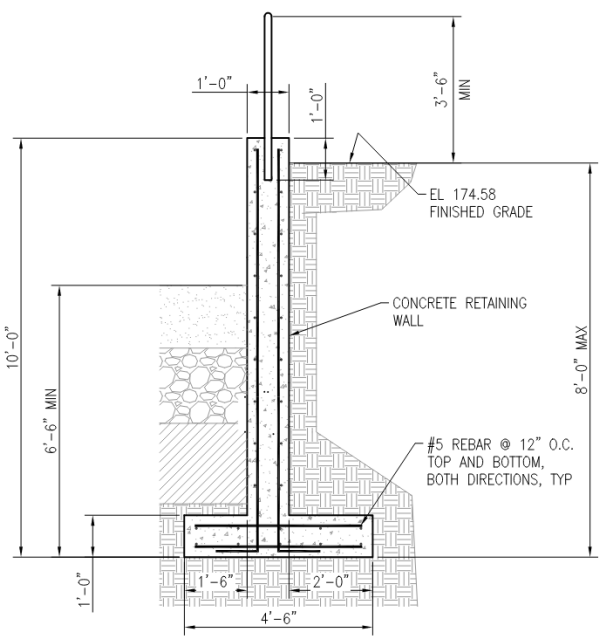

Check stability with submerged soil case

$B_{ftg} := B_{toe} + T_{stem} + B_{heel} = 4.5\ ft$ *Total length of footing

$w_{heel} := B_{heel} \cdot T_{ftg} \cdot 150\ pcf = 300\ plf$ *Weight of heel

$w_{toe} := B_{toe} \cdot T_{ftg} \cdot 150\ pcf = 225\ plf$ *Weight of toe

$w_{stem} := T_{stem} \cdot H_{total} \cdot 150\ pcf + T_{key} \cdot H_{key} \cdot 150\ pcf = 1500\ plf$ *Weight of stemwall

$w_{h_soil} := B_{heel} \cdot \left(\left(H_1 - T_{ftg}\right) \cdot \left(\gamma_{sat} - \gamma_w\right)\right) = 1016.4\ plf$ *Weight of soil over heel

$w_{t_soil} := B_{toe} \cdot \left(H_2 - T_{ftg}\right) \cdot \left(\gamma_{sat} - \gamma_w\right) = 598.95\ plf$ *Weight of soil over toe

$V_{sub} := B_{ftg} \cdot T_{ftg} + T_{stem} \cdot \left(H_1 - T_{ftg}\right) + T_{key} \cdot H_{key} = 11.5\ \frac{ft^3}{ft}$ *Volume of footing submerged under water

Check Sliding: $1.0\ DL + 0.7\ EL + 1.0\ H$ ASD *Soil submerged case

$V_{E_conc} := 0.7 \cdot \left(B_{ftg} \cdot T_{ftg} + T_{stem} \cdot \left(H_{total} - T_{ftg}\right)\right) \cdot 150\ pcf \cdot C_s = 0.42\ klf$ *Seismic force on concrete

$V_{E_soil} := \frac{1}{2} \cdot 0.7 \cdot \gamma_{eq} \cdot H_1^{\ 2} - \frac{1}{2} \cdot 0.7 \cdot \gamma_{eq} \cdot H_2^{\ 2} = 0.65\ klf$ *Seismic force on soil

$V_{active} := \frac{1}{2} \cdot \left(k_a \cdot \left(\gamma_{sat} - \gamma_w\right)\right) \cdot H_1^{\ 2} = 0.77\ klf$ *Active soil pressure

$V_{cause} := V_{E_soil} + V_{E_conc} + V_{active} = 1.84\ klf$ *Total sliding force acting on wall

$V_{pass} := \frac{1}{2} \cdot k_o \cdot \left(\gamma_{sat} - \gamma_w\right) \cdot \left(H_2\right)^2 = 4.29\ klf$ *Passive soil pressure

*The passive force cannot exert a greater force than what is acting on it.

$V_{pass} := V_{cause} = 1.84\ klf$ *Actual passive soil pressure

$V_{friction} := \left(w_{heel} + w_{toe} + w_{stem} + w_{h_soil} + w_{t_soil} - V_{sub} \cdot \gamma_w\right) \cdot \mu_{slide} = 1.46\ klf$ *Soil friction resistance

$V_{resist} := V_{friction} + V_{pass} = 3.3\ klf$ *Total sliding force resisted by wall

$\frac{V_{resist}}{V_{cause}} = 1.79$ > 1.5 ok *Demand ratio for sliding

Check Overturning: $1.0\ DL + 0.7\ EL + 1.0\ H \quad ASD$ *Soil submerged

*Moments taken about the front point of the toe

$$M_{heel} := \left(w_{heel} + w_{h_soil}\right) \cdot \left(\frac{1}{2} \cdot B_{heel} + B_{toe} + T_{stem}\right) = 4.61\ \frac{kip \cdot ft}{ft}$$

$$M_{stem} := w_{stem} \cdot \left(\frac{1}{2} \cdot T_{stem} + B_{toe}\right) = 3\ \frac{kip \cdot ft}{ft}$$

$$M_{toe} := \left(w_{toe} + w_{t_soil}\right) \cdot \left(\frac{1}{2} \cdot B_{toe}\right) = 0.62\ \frac{kip \cdot ft}{ft}$$

*The passive force cannot exert a greater force than what is acting on it.

$$M_{passive} := V_{pass} \cdot \frac{1}{3} \cdot H_2 = 3.98\ \frac{kip \cdot ft}{ft}$$

$$M_{resist} := M_{heel} + M_{stem} + M_{toe} + M_{passive} = 12.21\ \frac{kip \cdot ft}{ft}$$

$$M_{E_concf} := 0.7 \cdot \left(B_{ftg} \cdot T_{ftg}\right) \cdot 150\ pcf \cdot C_s \cdot \frac{1}{2} \cdot T_{ftg} = 0.07\ \frac{kip \cdot ft}{ft}$$

$$M_{E_concs} := 0.7 \cdot \left(T_{stem} \cdot \left(H_{total} - T_{ftg}\right)\right) \cdot 150\ pcf \cdot C_s \cdot \frac{1}{2} \cdot \left(H_{total} - T_{ftg}\right) = 1.25\ \frac{kip \cdot ft}{ft}$$

$$M_{E_soil} := \frac{1}{2} \cdot 0.7 \cdot \gamma_{eq} \cdot H_1^{\ 2} \cdot \frac{1}{3} \cdot H_1 - \frac{1}{2} \cdot 0.7 \cdot \gamma_{eq} \cdot H_2^{\ 2} \cdot \frac{1}{3} \cdot H_2 = 2.35\ \frac{kip \cdot ft}{ft}$$

$$M_{active} := V_{active} \cdot \frac{1}{3} \cdot H_1 = 2.07\ \frac{kip \cdot ft}{ft}$$

$$M_{buoyant} := V_{sub} \cdot \gamma_w \cdot \frac{1}{2}\ B_{ftg} = 1.61\ \frac{kip \cdot ft}{ft}$$ *Uplift of buoyant water force

$$M_{cause} := M_{E_concf} + M_{E_concs} + M_{E_soil} + M_{active} + M_{buoyant} = 7.35\ \frac{kip \cdot ft}{ft}$$

$$\frac{M_{resist}}{M_{cause}} = 1.66 \quad > \quad 1.5 \quad ok$$ *Demand ratio for overturning

Check stability with surcharge soil case

$h_{ef} := 2\ ft$ *per AASHTO Table 3.11.6.4-2

$p_{surcharge} := h_{ef} \cdot k_a \cdot \gamma_{sat} = 90\ psf$

$B_{ftg} := B_{toe} + T_{stem} + B_{heel} = 4.5\ ft$ *Total length of footing

$w_{heel} := B_{heel} \cdot T_{ftg} \cdot 150\ pcf = 300\ plf$ *Weight of heel

$w_{toe} := B_{toe} \cdot T_{ftg} \cdot 150\ pcf = 225\ plf$ *Weight of toe

$w_{stem} := T_{stem} \cdot H_{total} \cdot 150\ pcf + T_{key} \cdot H_{key} \cdot 150\ pcf = 1500\ plf$ *Weight of stemwall

$w_{h_soil} := B_{heel} \cdot \left(\left(H_1 - T_{ftg}\right) \cdot \left(\gamma_{sat} - \gamma_w\right)\right) = 1016.4\ plf$ *Weight of soil over heel

$w_{t_soil} := B_{toe} \cdot \left(H_2 - T_{ftg}\right) \cdot \left(\gamma_{sat} - \gamma_w\right) = 598.95\ plf$ *Weight of soil over toe

$V_{sub} := B_{ftg} \cdot T_{ftg} + T_{stem} \cdot \left(H_1 - T_{ftg}\right) + T_{key} \cdot H_{key} = 11.5\ \frac{ft^3}{ft}$ *Volume of footing submerged under water

Check Sliding: $1.0\ DL + 1.0\ LL + 1.0\ H$ ASD *Soil submerged case

$V_{surcharge} := p_{surcharge} \cdot H_1 = 0.72\ klf$

$V_{active} := \frac{1}{2} \cdot \left(k_a \cdot \left(\gamma_{sat} - \gamma_w\right)\right) \cdot {H_1}^2 = 0.77\ klf$ *Active soil pressure

$V_{cause} := V_{active} + V_{surcharge} = 1.49\ klf$ *Total sliding force acting on wall

$V_{pass} := \frac{1}{2} \cdot k_o \cdot \left(\gamma_{sat} - \gamma_w\right) \cdot \left(H_2\right)^2 = 4.29\ klf$ *Passive soil pressure

*The passive force cannot exert a greater force than what is acting on it.

$V_{pass} := V_{cause} = 1.49\ klf$

$V_{friction} := \left(w_{heel} + w_{toe} + w_{stem} + w_{h_soil} + w_{t_soil} - V_{sub} \cdot \gamma_w\right) \cdot \mu_{slide} = 1.46\ klf$ *Soil friction resistance

$V_{resist} := V_{friction} + V_{pass} = 2.96\ klf$ *Total sliding force resisted by wall

$\frac{V_{resist}}{V_{cause}} = 1.98$ > 1.5 ok *Demand ratio for sliding (Surcharge does not govern)

Check Overturning: $1.0\ DL + 1.0\ LL + 1.0\ H$ ASD *Soil submerged

*Moments taken about the front point of the toe

$$M_{heel} := \left(w_{heel} + w_{h_soil}\right) \cdot \left(\frac{1}{2} \cdot B_{heel} + B_{toe} + T_{stem}\right) = 4.61\ \frac{kip \cdot ft}{ft}$$

$$M_{stem} := w_{stem} \cdot \left(\frac{1}{2} \cdot T_{stem} + B_{toe}\right) = 3\ \frac{kip \cdot ft}{ft}$$

$$M_{toe} := \left(w_{toe} + w_{t_soil}\right) \cdot \left(\frac{1}{2} \cdot B_{toe}\right) = 0.62\ \frac{kip \cdot ft}{ft}$$

*The passive force cannot exert a greater force than what is acting on it.

$$M_{passive} := V_{pass} \cdot \frac{1}{3} \cdot \left(H_2\right) = 3.24\ \frac{kip \cdot ft}{ft}$$

$$M_{resist} := M_{heel} + M_{stem} + M_{toe} + M_{passive} = 11.46\ \frac{kip \cdot ft}{ft}$$

$$M_{surcharge} := p_{surcharge} \cdot H_1 \cdot \frac{1}{2} \cdot H_1 = 2.88\ \frac{kip \cdot ft}{ft}$$

$$M_{active} := \frac{1}{2} \cdot \left(\frac{1}{3} \cdot \left(\gamma_{sat} - \gamma_w\right)\right) \cdot H_1^{\ 2} \cdot \frac{1}{3} \cdot H_1 = 2.07\ \frac{kip \cdot ft}{ft}$$

$$M_{buoyant} := V_{sub} \cdot \gamma_w \cdot \frac{1}{2}\ B_{ftg} = 1.61\ \frac{kip \cdot ft}{ft}$$ *Uplift of buoyant water force

$$M_{cause} := M_{surcharge} + M_{active} + M_{buoyant} = 6.56\ \frac{kip \cdot ft}{ft}$$

$\frac{M_{resist}}{M_{cause}} = 1.75$ > 1.5 ok *Demand ratio for sliding (Surcharge does not govern)

<u>Check Bearing Pressure</u> $1.0\ DL + 0.7\ EL + 1.0\ H$ *Soil submerged case

Find total weight under condition above

$w_{heel} := B_{heel} \cdot T_{ftg} \cdot 150\ pcf = 300\ plf$ *Weight of heel

$w_{toe} := B_{toe} \cdot T_{ftg} \cdot 150\ pcf = 225\ plf$ *Weight of toe

$w_{stem} := T_{stem} \cdot H_{total} \cdot 150\ pcf + T_{key} \cdot H_{key} \cdot 150\ pcf = 1500\ plf$ *Weight of stemwall

$w_{h_soil} := B_{heel} \cdot (H_1 - T_{ftg}) \cdot (\gamma_{sat} - \gamma_w) = 1016.4\ plf$ *Weight of soil over heel

$w_{t_soil} := B_{toe} \cdot (H_2 - T_{ftg}) \cdot (\gamma_{sat} - \gamma_w) = 598.95\ plf$ *Weight of soil over toe

$w_{total} := w_{heel} + w_{toe} + w_{stem} + w_{h_soil} + w_{t_soil} - V_{sub} \cdot \gamma_w = 2.92\ klf$

Sum all moments about the heel edge:

$$M_{heel} := (w_{heel} + w_{h_soil}) \cdot \left(\frac{1}{2} \cdot B_{heel}\right) = 1.32\ \frac{kip \cdot ft}{ft}$$

$$M_{stem} := w_{stem} \cdot \left(\frac{1}{2} \cdot T_{stem} + B_{heel}\right) = 3.75\ \frac{kip \cdot ft}{ft}$$

$$M_{toe} := (w_{toe} + w_{t_soil}) \cdot \left(\frac{1}{2} \cdot B_{toe} + T_{stem} + B_{heel}\right) = 3.09\ \frac{kip \cdot ft}{ft}$$

$$M_{passive} := -V_{pass} \cdot \frac{1}{3} \cdot (H_2) = -3.24\ \frac{kip \cdot ft}{ft}$$

$$M_{buoyant} := -V_{sub} \cdot \gamma_w \cdot \frac{B_{ftg}}{2} = -1.61\ \frac{kip \cdot ft}{ft}$$

$$M_{E_concf} := 0.7 \cdot (B_{ftg} \cdot T_{ftg}) \cdot 150\ pcf \cdot C_s \cdot \frac{1}{2} \cdot T_{ftg} = 0.07\ \frac{kip \cdot ft}{ft}$$

$$M_{E_concs} := 0.7 \cdot (T_{stem} \cdot (H_{total} - T_{ftg})) \cdot 150\ pcf \cdot C_s \cdot \frac{1}{2} \cdot (H_{total} - T_{ftg}) = 1.25\ \frac{kip \cdot ft}{ft}$$

$$M_{E_soil} := \frac{1}{2} \cdot 0.7 \cdot \gamma_{eq} \cdot H_1^{\ 2} \cdot \frac{1}{3} \cdot H_1 - \frac{1}{2} \cdot 0.7 \cdot \gamma_{eq} \cdot H_2^{\ 2} \cdot \frac{1}{3} \cdot H_2 = 2.35\ \frac{kip \cdot ft}{ft}$$

$$M_{active} := V_{active} \cdot \frac{1}{3} \cdot (H_1) = 2.07\ \frac{kip \cdot ft}{ft}$$

$$M_a := M_{heel} + M_{stem} + M_{toe} + M_{passive} + M_{buoyant} + M_{E_concf} + M_{E_concs} + M_{E_soil} + M_{active} = 9\ \frac{kip \cdot ft}{ft}$$

$e := \frac{M_a}{w_{total}} - \frac{B_{ftg}}{2} = 0.84\ ft$ > $\frac{B_{ftg}}{6} = 0.75\ ft$ *Outside kern

$\sigma_{max} := \frac{2 \cdot w_{total}}{3 \cdot \left(\frac{B_{ftg}}{2} - e\right)} = 1.39\ ksf$ < $\sigma_{allowable} = 3\ ksf$ ok *Submerged controls

<u>Concrete Strength - Footing</u> $1.2\ DL + 1.0\ EL + 1.6\ H$ $LRFD$

Find total weight under condition above

$w_{heel} := 1.2 \cdot B_{heel} \cdot T_{ftg} \cdot 150\ pcf = 360\ plf$ *Weight of heel

$w_{toe} := 1.2 \cdot B_{toe} \cdot T_{ftg} \cdot 150\ pcf = 270\ plf$ *Weight of toe

$w_{stem} := 1.2 \cdot T_{stem} \cdot H_{total} \cdot 150\ pcf + T_{key} \cdot H_{key} \cdot 150\ pcf = 1800\ plf$ *Weight of stemwall

$w_{h_soil} := 1.2 \cdot B_{heel} \cdot (H_1 - T_{ftg}) \cdot (\gamma_{sat} - \gamma_w) = 1219.68\ plf$ *Weight of soil over heel

$w_{t_soil} := 1.2 \cdot B_{toe} \cdot (H_2 - T_{ftg}) \cdot (\gamma_{sat} - \gamma_w) = 718.74\ plf$ *Weight of soil over toe

$w_{total} := w_{heel} + w_{toe} + w_{stem} + w_{h_soil} + w_{t_soil} - 1.2 \cdot V_{sub} \cdot \gamma_w = 3.51\ klf$

Sum all moments about the heel edge:

$M_{heel} := (w_{heel} + w_{h_soil}) \cdot \left(\frac{1}{2} \cdot B_{heel}\right) = 1.58\ \frac{kip \cdot ft}{ft}$

$M_{stem} := w_{stem} \cdot \left(\frac{1}{2} \cdot T_{stem} + B_{heel}\right) = 4.5\ \frac{kip \cdot ft}{ft}$

$M_{toe} := (w_{toe} + w_{t_soil}) \cdot \left(\frac{1}{2} \cdot B_{toe} + T_{stem} + B_{heel}\right) = 3.71\ \frac{kip \cdot ft}{ft}$

$M_{passive} := -1.6 \cdot V_{pass} \cdot \frac{1}{3} \cdot (H_2) = -5.18\ \frac{kip \cdot ft}{ft}$

$M_{buoyant} := -1.2 \cdot V_{sub} \cdot \gamma_w \cdot \frac{B_{ftg}}{2} = -1.94\ \frac{kip \cdot ft}{ft}$

$M_{E_concf} := (B_{ftg} \cdot T_{ftg}) \cdot 150\ pcf \cdot C_s \cdot \frac{1}{2} \cdot T_{ftg} = 0.1\ \frac{kip \cdot ft}{ft}$

$M_{E_concs} := (T_{stem} \cdot (H_{total} - T_{ftg})) \cdot 150\ pcf \cdot C_s \cdot \frac{1}{2} \cdot (H_{total} - T_{ftg}) = 1.79\ \frac{kip \cdot ft}{ft}$

$$M_{E_soil} := \frac{1}{2} \cdot \gamma_{eq} \cdot H_1^{\ 2} \cdot \frac{1}{3} \cdot H_1 - \frac{1}{2} \cdot \gamma_{eq} \cdot H_2^{\ 2} \cdot \frac{1}{3} \cdot H_2 = 3.36 \ \frac{kip \cdot ft}{ft}$$

$$M_{active} := 1.6 \cdot V_{active} \cdot \frac{1}{3} \cdot (H_1) = 3.3 \ \frac{kip \cdot ft}{ft}$$

$$M_u := M_{heel} + M_{stem} + M_{toe} + M_{passive} + M_{buoyant} + M_{E_concf} + M_{E_concs} + M_{E_soil} + M_{active} = 11 \ \frac{kip \cdot ft}{ft}$$

$$e := \frac{M_u}{w_{total}} - \frac{B_{ftg}}{2} = 0.95 \ ft \qquad > \qquad \frac{B_{ftg}}{6} = 0.75 \ ft$$ *Outside kern

$$\sigma_{max} := \frac{2 \cdot w_{total}}{3 \cdot \left(\frac{B_{ftg}}{2} - e\right)} = 1.8 \ ksf$$

Material Properties:

$b := 12 \ in$ $\qquad d := 9 \ in$ $\qquad h := 12 \ in$

$x := 1.5 \ ft$ *Point of max bending

Bending: (Foundation with uplift when 3m > x)

$$M_u := w_{total} \cdot e = 3.33 \ \frac{kip \cdot ft}{ft}$$
$$P_u := w_{total} = 3.51 \ klf$$

$$m := \left(\frac{B_{ftg}}{2} - e\right) = 1.3 \ ft$$

$3 \cdot m = 3.9 \ ft$ *Length of stress reaction

$$\sigma_x := \frac{\sigma_{max} \cdot (3 \cdot m - x)}{3 \cdot m} = 1106.87 \ psf$$ *Pressure at point of max bending

$$M_u := \left(\sigma_x \cdot \frac{x^2}{2}\right) \cdot b + \frac{1}{3} \cdot (\sigma_{max} - \sigma_x) \cdot x^2 \cdot b = 1.8 \ ft \cdot kip$$

*Ok by observation

<u>Concrete Strength - Stemwall</u> $\qquad 1.2 \ DL + 1.0 \ EL + 1.6 \ H \qquad LRFD$

$$M_{passive} := -1.6 \cdot V_{pass} \cdot \frac{1}{3} \cdot (H_2 - T_{ftg}) = -4.38 \ \frac{kip \cdot ft}{ft}$$

$$M_{E_concs} := \left(T_{stem} \cdot \left(H_{total} - T_{ftg}\right)\right) \cdot 150\ pcf \cdot C_s \cdot \frac{1}{2} \cdot \left(H_{total} - T_{ftg}\right) = 1.79\ \frac{kip \cdot ft}{ft}$$

$$M_{E_soil} := \frac{1}{2} \cdot \gamma_{eq} \cdot \left(H_1 - T_{ftg}\right)^2 \cdot \frac{1}{3} \cdot \left(H_1 - T_{ftg}\right) - \frac{1}{2} \cdot \gamma_{eq} \cdot \left(H_2 - T_{ftg}\right)^2 \cdot \frac{1}{3} \cdot \left(H_2 - T_{ftg}\right) = 2.5\ \frac{kip \cdot ft}{ft}$$

$$M_{active} := 1.6 \cdot V_{active} \cdot \frac{1}{3} \cdot \left(H_1 - T_{ftg}\right) = 2.89\ \frac{kip \cdot ft}{ft}$$

$$M_u := M_{passive} + M_{E_concs} + M_{E_soil} + M_{active} = 2.8\ \frac{kip \cdot ft}{ft}$$

*Shear produced from active and earthquake is less than the shear that can be produce from passive pressure; therefore, no shear is acting on the stemwall.

Pipe thrust calculation <u>Hold back at pump</u>

*Use Hazen William's equation to find the headloss in the system:

$c := 140$ *For polyethylene pipe

$L_{equivalent} := 415 + 26 = 441$ *Distance from first bend to the pump assuming (1) 90 degree bend

$Q := 3142\ gpm$

$d := 10\ in$

$$h_f := \frac{10.44 \cdot L_{equivalent} \cdot Q^{1.85}}{c^{1.85} \cdot d^{4.87}} = 19.62\ ft$$

*Using Bernoulli equation for pressure drop:

$h := 4\ ft$ *Elevation head at top of catch basin
$P_2 := h \cdot \gamma_w = 1.73\ psi$ *Pressure at pipe outlet
$\gamma_w := 62.4\ pcf$
$h_f := h_f \cdot ft = 19.62\ ft$
$P_1 := \gamma_w \cdot h_f + P_2 = 10.23\ psi$
$d := 10\ in$

$$A := \frac{\pi \cdot d^2}{4} = 0.55\ ft^2$$

$Q := 3142\ gpm$

$$V := \frac{Q}{A} = 12.83\ \frac{ft}{s}$$

$F := 2 \cdot A \cdot (P_1 - P_2) = 1335\ lbf$ *Force to hold back 415 feet of pipe

Thrust block at first bend

*Use Hazen William's equation to find the headloss in the system:

$c := 140$ *For polyethylene pipe

$L_{equivalent} := 15 + 2 \cdot 13.5 = 42$ *Distance from first bend to the opening

$Q := 3142\ gpm$

$d := 10\ in$

$$h_f := \frac{10.44 \cdot L_{equivalent} \cdot Q^{1.85}}{c^{1.85} \cdot d^{4.87}} = 1.87\ ft$$

*Using Bernoulli equation for pressure drop:

$h := 4\ ft$ *Elevation head at top of catch basin
$P_2 := h \cdot \gamma_w = 1.73\ psi$ *Pressure at pipe outlet
$\gamma_w := 62.4\ pcf$
$h_f := h_f \cdot ft = 1.87\ ft$
$P_1 := \gamma_w \cdot h_f + P_2 = 2.54\ psi$ *Pressure just before the first bend

*See attached pipe flow calculator for thrust block force

Thrust block at second bend

*Use Hazen William's equation to find the headloss in the system:

$c := 140$ *For polyethylene pipe

$L_{equivalent} := 10 + 13.5 = 23.5$ *Distance from first bend to the opening

$Q := 3142\ gpm$
$d := 10\ in$

$$h_f := \frac{10.44 \cdot L_{equivalent} \cdot Q^{1.85}}{c^{1.85} \cdot d^{4.87}} = 1.05\ ft$$

*Using Bernoulli equation for pressure drop:
$h := 4\ ft$ *Elevation head at top of catch basin
$P_2 := h \cdot \gamma_w = 1.73\ psi$ *Pressure at pipe outlet
$\gamma_w := 62.4\ pcf$

$h_f := h_f \cdot ft = 1.05\ ft$
$P_1 := \gamma_w \cdot h_f + P_2 = 2.19\ psi$ *Pressure just before the second bend

*See attached pipe flow calculator for thrust block force

Thrust at opening

*Use Hazen William's equation to find the headloss in the system:

$c := 140$ *For polyethylene pipe

$L_{equivalent} := 10$ *Distance from first bend to the opening

$Q := 3142\ gpm$

$d := 10\ in$

$$h_f := \frac{10.44 \cdot L_{equivalent} \cdot Q^{1.85}}{c^{1.85} \cdot d^{4.87}} = 0.44\ ft$$

*Using Bernoulli equation for pressure drop:

$h := 4\ ft$ *Elevation head at top of catch basin
$P_2 := h \cdot \gamma_w = 1.73\ psi$ *Pressure at pipe outlet
$\gamma_w := 62.4\ pcf$
$h_f := h_f \cdot ft = 0.44\ ft$
$P_1 := \gamma_w \cdot h_f + P_2 = 1.93\ psi$ *Pressure just before the second bend
$d := 10\ in$

$$A := \frac{\pi \cdot d^2}{4} = 0.55\ ft^2$$

$Q := 3142\ gpm$

$$V := \frac{Q}{A} = 12.83\ \frac{ft}{s}$$

$F := 2 \cdot A \cdot (P_1 - P_2) = 30\ lbf$ *Force to hold back 10 feet of pipe

Linear momentum reaction at opposite end of basin

$$V := \frac{Q}{A} = 12.83\ \frac{ft}{s}$$

$$F := \frac{\gamma_w}{32.2\ \frac{ft}{s^2}} \cdot A \cdot V^2 = 174\ lbf$$

*Force exerted by water momentum on opposite side of basin. Force is insignificant