King County Sediment Management Plan Update

CSO Sediment Quality Characterization

2015 Ballard CSO Sediment Sampling Event

Final Report

Prepared for the

King County Department of Natural Resources and Parks
Wastewater Treatment Division

and the

Washington State Department of Ecology

by

Anchor QEA, LLC

November 2016

King County

King County Sediment Management Plan Update

CSO Sediment Quality Characterization

2015 Ballard CSO Sediment Sampling Event

Final Report

Prepared by

Anchor QEA, LLC
720 Olive Way, Suite 1900
Seattle, Washington 98101

November 2016

King County

Table of Contents

List of Tables

List of Figures

List of Appendices

Abbreviations

µg/kg	micrograms per kilogram
cm	centimeter
CSL	cleanup screening level
CSO	combined sewer overflow
DGPS	differential global positioning system
DOD	Department of Defense
EIM	Environmental Information Management
EPA	U.S. Environmental Protection Agency
GC/ECD	gas chromatography with electron capture detector
GC/MS	gas chromatography/mass spectroscopy
ICP/MS	inductively coupled plasma mass spectroscopy
KC Laboratory	King County Environmental Laboratory
MDL	method detection limit
mg/kg	milligrams per kilogram
NAD83	North American Datum of 1983
NPDES	National Pollutant Discharge Elimination System
PAH	polycyclic aromatic hydrocarbons
PCB	polychlorinated biphenyl
PSD	particle size distribution
PSEP	Puget Sound Estuary Program
QA/QC	quality assurance/quality control
SAP	Sampling and Analysis Plan
SCUM II	*Sediment Cleanup Users Manual II*
SM	Standard Method
SMS	Sediment Management Standards
SVOC	semivolatile organic compound
TOC	total organic carbon
TPH	total petroleum hydrocarbon
WAC	Washington Administrative Code

1 Introduction

This report presents results from the 2015 King County Combined Sewer Overflow (CSO) Sediment Quality Characterization for the Ballard CSO. King County's West Point Treatment Plant National Pollutant Discharge Elimination System (NPDES) permit No. WA0029181, issued by the Washington State Department of Ecology (Ecology) effective February 1, 2015, requires sediment characterization following completion of CSO control projects. Pursuant to King County's Post Construction Monitoring Plan (PCMP; King County 2012), sediment needs to be characterized by sampling or modeling after substantial completion. This report presents the sediment sampling required under the permit and the PCMP.

1.1 Project Background

Either sediment sampling or modeling is needed to characterize sediment conditions in front of CSOs following substantial completion of control projects. Substantial completion of the Ballard Siphon was achieved at the end of 2013, which controlled the Ballard CSO. Sediment characterization of the Ballard CSO discharge point occurred in fall 2015. Figure 1 is a vicinity map depicting the Ballard CSO site location.

King County has collected sediment quality data at a wide range of its CSO outfall discharge locations, both as part of past NPDES sediment monitoring requirements, as well as during focused environmental studies. These data were previously provided in King County's comprehensive sediment quality report (King County 2009). These data were collected and reviewed consistent with the Quality Assurance and Project Plan and Sediment Sampling and Analysis Plan (SAP) approved as part of the PCMP (Appendix H of King County 2012). Although the programmatic SAP did not specifically list Ballard as one of the sites needing sampling, the fact that the Ballard Siphon project controlled the Ballard CSO was determined to be an event that should trigger the PCMP process. The data quality objectives of the SAP were to collect data of sufficient quantity and quality to:

- Measure the areal extent and spatial variations of sediment chemical concentrations in front of 10 King County CSO discharge points
- Evaluate these sediment chemical concentrations relative to the current marine sediment quality standards of Chapter 173-204 Washington Administrative Code (WAC; Ecology 1995) and the freshwater sediment quality reference values[1] found on Ecology's Environmental Information Management (EIM) database
- Provide data for populating, calibrating, and validating the near-field sediment recontamination model, as part of the process to update King County's Sediment Management Plan
- Provide pre-construction, baseline, sediment quality data at four of the County's CSO facilities, at which CSO control projects are currently underway.

[1] Revisions to Sediment Management Standards adopted in 2013 established freshwater benthic sediment cleanup level chemical criteria (WAC 173-204-563). Freshwater sediment standards are reserved in the rule.

This study addresses the first two of the four objectives for the Ballard CSO.

The PCMP requires site-specific SAP addendums to be developed for each CSO because CSOs discharge at varying volumes and depths and into varying flow regimes. Informed by preliminary sediment transport model projections, collection of seven sediment samples at the Ballard CSO site was determined sufficient to provide data to meet the study goals listed previously.

King County modeling staff performed a scaling analysis for the Ballard CSO in order to provide the optimal sampling station array. The scaling analysis identifying target sampling locations is provided in Appendix A, and represents the site-specific SAP addendum, as no other changes to the programmatic SAP were needed. The scaling analysis was performed to determine where particulate matter discharged during CSO events would most likely settle to the surface sediment in the receiving water. The model used in the scaling analysis described the percent of suspended solids that would settle into the sediment and included the following assumptions:

- The discharged suspended solids are well mixed across the water depth
- Receiving water velocity is primarily in the along-shore direction
- The characteristic offshore velocity of the plume is 10% of the pipe discharge velocity
- The characteristic settling velocity of CSO solids most likely to deposit in the vicinity of the outfall is 0.1 centimeters (cm) per second (based on a median settling velocity of particles in effluent collected from other sampled King County CSOs)

1.2 Project Report and Associated Data Submittal

This report includes a description of both the sampling and analytical methodologies and a summary of the sediment chemistry analytical results. Appendices to the report include complete sediment chemistry analytical results, quality assurance (QA) results, and a memorandum describing the data validation results. All project data referenced in this report will be submitted electronically to Ecology's EIM database.

2 Sample Collection

Sediment samples were collected in October 2015 from seven stations located in the vicinity of the Ballard CSO. Figure 2 provides the locations of the sampling stations, all of which are in a freshwater environment. All sample collection followed protocols outlined in the SAP (Appendix H of King County 2012) and are consistent with Puget Sound Estuary Program's (PSEP) Puget Sound Protocols (PSEP 1997a, 1998). Sediment was obtained using a modified stainless steel 0.1-square-meter dual van Veen grab sampler deployed from King County's research vessel *Chinook*.

The *Chinook* is equipped with a differential global positioning system (DGPS). The DGPS is a satellite-based navigation system that operates using a receiver to calculate ground position by triangulating scrambled data transmitted by a constellation of satellites operated by the Department of Defense (DOD). The ship-board differential receiver receives both the scrambled DOD signal and corrected signals originating from base stations operated by various agencies, including the U.S. Coast Guard and King County. Upon contact of the grab sampler with the bottom, the coordinate data representing the actual sediment grab impact point were electronically recorded in real time. Positioning information included local time and date that a position was recorded, comments, and coordinate data in both latitude/longitude and North American Datum of 1983 (NAD83) State Plane formats. Field coordinates were within the accuracy limits of +/- 6 meters. With the exception of CSO-BL-6, all of the target sample locations were accessible; CSO-BL-6 was moved to the closest accessible location. Figure 2 presents the sediment sampling station array based on actual sample locations.

Samples consisted of the top 10 cm of sediment collected from the contents of a single deployment of the grab sampler. For each deployment, between 15 to 17 cm of sediment was recovered, allowing subsampling from the top 10 cm.

Observations were documented at each station. No precipitation occurred during sampling, weather was cloudy and foggy with a north wind. Sheen was observed in all sediment grabs. Significant sheen was noted at stations CSO-BL-1 and CSO-BL-2. Petroleum and hydrogen sulfide odor was also noted at station CSO-BL-1.

When sufficient sediment for all analyses had been collected, the sediment was thoroughly homogenized and sediment aliquots transferred to appropriate laboratory containers. A separate set of stainless-steel sampling equipment was dedicated to each station, precluding the need for decontamination of this field gear. The van Veen grab sampler was decontaminated between stations by scrubbing with a brush and ambient water, followed by a thorough in situ rinsing.

Samples were stored in ice-filled coolers from the time of collection until delivery to the King County Environmental Laboratory (KC Laboratory) at the end of each sampling day. Samples were delivered under chain-of-custody and were maintained as such throughout the analytical process. Samples were stored frozen at a temperature of -18 °C by the laboratory until analysis, with the exception of samples for particle size distribution (PSD). These samples were stored refrigerated at approximately 4 °C.

3 Sample Analysis

Seven freshwater sediment samples were submitted for chemical analysis of conventional, metals, and organic parameters. Sediment chemistry analytical parameters were selected considering the results of previous King County CSO sediment characterization, the SAP (Appendix H of King County 2012), and freshwater benthic sediment cleanup level chemical criteria (WAC 173-204-563). All analyses were performed by the KC Laboratory. Data quality review based on laboratory QA data are provided in the Data Validation Review (Appendix B). All qualifiers applied due to data quality issues are included in Table 1.

Conventional analyses included percent solids, total organic carbon (TOC), and PSD. Percent solids analysis was performed according to Standard Method (SM) 2540-G (APHA 2005)—a gravimetric determination. TOC analysis was performed following U.S. Environmental Protection Agency (EPA) Method 9060 (SW-846; EPA 2007)—high-temperature combustion with infrared spectroscopy. PSD analysis was performed according to ASTM International Method D422—a combination of sieve and hydrometer methodologies (ASTM 2002).

Metals analyses included antimony, arsenic, cadmium, chromium, copper, lead, mercury, nickel, silver, and zinc. Mercury was analyzed according to EPA Method 7471B (SW-846)—cold vapor atomic absorption spectroscopy. The remaining metals were analyzed according to EPA Methods 3050B/6020A—strong-acid digestion with inductively coupled plasma mass spectroscopy (ICP/MS).

Trace organic parameters included semivolatile organic compounds (SVOCs) and polychlorinated biphenyls (PCBs). SVOC analysis was performed according to EPA Methods 3550B/8270D (SW-846), which employ solvent extraction with sonication and analysis by gas chromatography/mass spectroscopy (GC/MS). PCB analysis was performed according to EPA Methods 3550B/8082A (SW-846), which employ solvent extraction with sonication and analysis by gas chromatography with electron capture detector (GC/ECD) and dual column confirmation.

The SAP was written in 2011 using the relevant Sediment Management Standards (SMS) criteria (from 1995). In 2013, the SMS rule was updated, resulting in freshwater cleanup levels (WAC 173-204-563) that include parameters that differ from the SAP that were not analyzed in this study. These parameters include ammonia, sulfides, selenium, butyltins, beta-hexachlorocyclohexane, dieldrin, endrin ketone, DDX compounds, and total petroleum hydrocarbon (TPH).

Sediment chemistry analyses were performed following guidance recommended in the Puget Sound Protocols (PSEP 1986, 1997a, 1997b) including associated quality assurance/quality control (QA/QC) practices. Laboratory QA/QC practices produced chemistry data of sufficient quality to pass QA1 review. Chemistry data review was conducted in accordance with guidelines established through the Puget Sound Dredged Disposal Analysis program (Ecology 1989), SMS (173-204-610 WAC), and the *Sediment Cleanup Users Manual II* (SCUM II; Ecology 2015). Other approaches incorporated in the QA review have been established through collaboration between the KC Laboratory and Ecology's Sediment Management Unit. A memorandum summarizing the data validation review for this project is included as Appendix B.

4 Deviations from the Sampling and Analysis Plan

There were some deviations from the SAP (Appendix H of King County 2012). These include the following:

- The target sample location for CSO-BL-6 was obstructed by a boathouse. This sample was moved to the closest accessible location.
- All PCBs and SVOCs had elevated method detection limits (MDLs) above the goals specified in the SAP, due to low total solids and dilutions required for proper quantification. Despite the elevated MDLs, the non-detect results were still below the freshwater benthic sediment cleanup objective, with few exceptions: 3,4-methylphenol, phenol, di-n-octyl-phthalate, and pentachlorophenol had MDLs elevated above the screening levels in one or more samples. These are italicized in Table 1.

5 Sediment Chemistry Analytical Results

Analytical results for the 2015 Ballard CSO Sediment Characterization are presented in this section. Complete sediment chemistry analytical results are included as Appendix C to this report.

Chemical concentrations detected in the Ballard CSO surface sediment samples were compared to freshwater cleanup level chemical criteria based on protection of benthic community as reported in WAC 173-204-563 and Table 8-1 of SCUM II (Ecology 2015). Results are compared to both the sediment cleanup objective (SCO) and cleanup screening level (CSL) chemical criteria on a dry weight basis, either in units of milligrams per kilogram (mg/kg) for metals or micrograms per kilogram (µg/kg) for organic compounds. Analytical results for the seven samples collected near the Ballard CSO are summarized in Table 1. The sample stations and associated chemicals greater than the freshwater SCO and CSL are presented in Table 2.

Only two results exceeded the CSL: mercury and bis(2-ethylhexyl)phthalate at a single station (CSO-BL-1) located closest to the former CSO discharge location (Figure 2). The average mercury concentration in the three contiguous sampling stations with the highest levels (Stations CSO-BL-1, -5, and -6) was 0.91 mg/kg and slightly above the CSL of 0.80 mg/kg, defining this area as a station cluster of potential concern under SMS (WAC 173-204-510:520; Ecology 2015). No station clusters exceeded the CSL for bis(2-ethylhexyl)phthalate of 22,000 µg/kg. Several other samples exceeded SCO chemical criteria in one or more samples. Chemicals with SCO exceedances included metals (arsenic, cadmium, copper, mercury, nickel, and silver), total PCBs, total polycyclic aromatic hydrocarbons (PAHs), bis(2-ethylhexyl)phthalate, and di-n-octyl phthalate. TPH, including diesel and residual range, were not tested in these samples; however, evidence of TPH contamination (i.e., sheen) was present at all sample locations.

Concentrations of total PAHs, phthalates, and several metals (antimony, cadmium, lead, mercury, and zinc) are highest in stations near the outfall. Arsenic, chromium, copper, nickel, silver, and carbazole concentrations are more evenly distributed across all stations. PCB concentration distribution indicates that there potentially is more than one source of PCBs in the area. The highest concentration of PCBs is from CSO-BL-6, the location furthest from the outfall, that was moved southwest due to target location obstruction. The second highest concentration of PCBs is near the outfall. Other SVOC analytes are detected below screening levels or non-detect.

6 References

APHA (American Public Health Association), 2005. *Standard Methods for the Examination of Water and Wastewater, 21st Edition*. American Public Health Association. Washington, D.C.

ASTM (ASTM International), 2002. *Standard Test Method for Particle-Size Analysis of Soils D422-63(2002)*. American Society for Testing and Materials. West Conshohocken, Pennsylvania.

Ecology (Washington State Department of Ecology), 1989. *Puget Sound Dredged Disposal Analysis Guidance Manual – Data Quality Evaluation for Proposed Dredged Material Disposal Projects*. Prepared for the Washington State Department of Ecology by PTI Environmental Services. June.

Ecology, 1995. *Sediment Management Standards, Chapter 173-204 WAC.* Washington State Department of Ecology. Olympia, Washington.

Ecology, 2015. *Sediment Cleanup Users Manual II (SCUM II)*. Washington State Department of Ecology Publication No. 12-09-057. March.

Ecology, 2016. Toxics Cleanup Program – Sediment Management Rule, Policy, and Guidance. http://www.ecy.wa.gov/programs/tcp/smu/sed_standards.htm.

EPA (U.S. Environmental Protection Agency), 2007. *Test Methods for Evaluating Solid Waste: Physical/Chemical Methods*. EPA Publication SW-846, 3rd Edition, Update IVB.

King County, 2009. *Comprehensive Sediment Quality Summary Report for CSO Discharge Locations*. King County Department of Natural Resources and Parks, Wastewater Treatment Division. December.

King County, 2012. *Post Construction Monitoring Plan for King County CSO Controls.* Prepared for King County Department of Natural Resources and Parks, Wastewater Treatment Division and the Washington State Department of Ecology. September.

PSEP (Puget Sound Estuary Program), 1986. *Recommended Protocols for Measuring Conventional Sediment Variables in Puget Sound.* Prepared for the Puget Sound Estuary Program (U.S. Environmental Protection Agency Region 10) by Tetra Tech, Inc. March.

PSEP, 1997a. *Recommended Guidelines for Measuring Metals in Puget Sound Marine Water, Sediment and Tissue Samples*. Prepared for the Puget Sound Estuary Program (U.S. Environmental Protection Agency Region 10) by the King County Environmental Laboratory. April.

PSEP, 1997b. *Recommended Guidelines for Measuring Organic Compounds in Puget Sound Marine Water, Sediment and Tissue Samples*. Prepared for the Puget Sound Estuary Program (U.S. Environmental Protection Agency Region 10) by the King County Environmental Laboratory. April.

PSEP, 1998. *Recommended Guidelines for Station Positioning in Puget Sound.* Prepared for the Puget Sound Estuary Program (U.S. Environmental Protection Agency Region 10) by the King County Environmental Laboratory. Seattle, Washington.

Tables

Table 1
Sediment Chemistry Results

Location:									
Sample Date: 10/14/2015			CSO-BL-1	CSO-BL-2	CSO-BL-3	CSO-BL-4	CSO-BL-5	CSO-BL-6	CSO-BL-7
	SCUM II Freshwater								
Parameter	SCO	CSL							
Metals (mg/kg)									
Antimony	--	--	**10 J**	**4.29 J**	**5.22 J**	**3.56 J**	**6.17 J**	**8.3 J**	**6.74 J**
Arsenic	14	120	**18.9**	**21.1**	**20.2**	**6.41**	**24.9**	**22.2**	**17.2**
Cadmium	2.1	5.4	**3.25**	**1.09**	**1.39**	**0.815**	**1.91**	**1.06**	**1.58**
Chromium	72	88	**69.3**	**53.6**	**63.5**	**21.8**	**63.9**	**55.3**	**48.8**
Copper	400	1200	**480**	**404**	**478**	**116**	**494**	**288**	**296**
Lead	360	> 1300	**325**	**144**	**272**	**102**	**231**	**160**	**173**
Mercury	0.66	0.8	**1.44**	**0.541**	**0.618**	**0.16 J**	**0.628**	**0.673**	**0.412**
Nickel	26	110	**49.7**	**45.9**	**52.6**	**18.5**	**49.7**	**43.4**	**37.1**
Silver	0.57	1.7	**1.09**	**0.755**	**0.802**	**0.186**	**0.933**	**0.871**	**0.674**
Zinc	3,200	> 4200	**978**	**568**	**491**	**466**	**722**	**390**	**792**
PCB Aroclors (µg/kg)									
Aroclor 1016	--	--	9.8 U	9 U	7.2 U	10 U	8.2 U	7.2 U	12 U
Aroclor 1221	--	--	29 U	27 U	22 U	30 U	25 U	22 U	36 U
Aroclor 1232	--	--	29 U	27 U	22 U	30 U	25 U	22 U	36 U
Aroclor 1242	--	--	**14 J**	9 UJ	**14 J**	10 UJ	8.2 UJ	**10 J**	12 UJ
Aroclor 1248	--	--	9.8 U	9 U	7.2 U	10 U	8.2 U	7.2 U	12 U
Aroclor 1254	--	--	**122**	**92.5**	**112**	**51.9**	**98.2**	**269 J**	**75.4**
Aroclor 1260	--	--	**66.5**	**43.9**	**49.6**	**25 J**	**56.9**	**77.4 J**	**58.4**
Aroclor 1268	--	--	**20 J**	9 U	7.2 U	10 U	8.2	7.2 U	12 U
Total PCBs[1]	110	2500	**222.5 J**	**136.4**	**175.6 J**	**76.9 J**	**155.1**	**356.4 J**	**133.8**
Semivolative Organic Compounds (µg/kg)									
1-Methylnaphthalene	--	--	81 U	75 U	60 U	83 U	68 U	60 U	99 U
2-Methylnaphthalene	--	--	81 U	75 U	60 U	83 U	68 U	60 U	99 U
Acenaphthene	--	--	**100 J**	75 U	**201**	**95 J**	**120 J**	**94 J**	99 U
Acenaphthylene	--	--	**83 J**	75 U	**100 J**	83 U	68 U	**100 J**	99 U
Anthracene	--	--	**208**	**178**	**388**	**444**	**205**	**227**	**180 J**
Benzo(a)anthracene	--	--	**1,350**	**751**	**1,540**	**1,510**	**877**	**881**	**1,080**
Benzo(a)pyrene	--	--	**1,990**	**889**	**2,050**	**1,850**	**1,110**	**1,250**	**1,430**
Benzo(b,j,k)fluoranthene	--	--	**5,840**	**2,100**	**4,730**	**4,460**	**2,980**	**2,820**	**3,740**
Benzo(g,h,i)perylene	--	--	**733**	**342**	**587**	**459**	**419**	**426**	**497**
Chrysene	--	--	**2,370**	**1,120**	**2,430**	**2,660**	**1,340**	**1,370**	**1,730**
Dibenzo(a,h)anthracene	--	--	**207**	**88 J**	**181**	**160 J**	**110 J**	**120 J**	**130 J**
Fluoranthene	--	--	**3,500**	**1,880**	**4,860**	**3,580**	**2,360**	**2,240**	**2,960**
Fluorene	--	--	**165**	**120 J**	**344**	**216**	**174**	**150**	**140 J**
Indeno(1,2,3-c,d)Pyrene	--	--	**941**	**439**	**842**	**697**	**520**	**523**	**620**
Naphthalene	--	--	81 U	75 U	**91 J**	83 U	68 U	**99 J**	99 U
Phenanthrene	--	--	**1,040**	**550**	**1900**	**1770**	**774**	**596**	**1060**
Pyrene	--	--	**4,280**	**2180**	**5820**	**4240**	**2730**	**2760**	**3530**
Total PAHs[1]	17,000	30,000	**22,807 J**	**10,637 J**	**26,064 J**	**22,141 J**	**13,719 J**	**13,656 J**	**17,097 J**
2,4-Dimethylphenol	--	--	81 U	75 U	60 U	83 U	68 U	60 U	99 U
2-Methylphenol	--	--	81 U	75 U	60 U	83 U	68 U	60 U	99 U
3-,4-Methylphenol	260	2,000	*420 U*	*380 U*	*310 U*	*430 U*	*350 U*	*310 U*	*510 U*
Benzoic Acid	2,900	3,800	1,630 U	1,510 U	1,210 U	1,670 U	1,370 U	1,200 U	2,000 U
Benzyl Alcohol	--	--	204 U	188 U	151 U	209 U	171 U	150 U	249 U

Table 1
Sediment Chemistry Results

Location:									
Sample Date: 10/14/2015			CSO-BL-1	CSO-BL-2	CSO-BL-3	CSO-BL-4	CSO-BL-5	CSO-BL-6	CSO-BL-7
	SCUM II Freshwater								
Parameter	SCO	CSL							
Dibenzofuran	200	680	81 U	75 U	**72 J**	83 U	68 U	60 U	99 U
Phenol	120	210	*420 U*	*380 U*	*310U*	*430 U*	*350 U*	*310 U*	*510 U*
N-Nitrosodiphenylamine	--	--	204 U	188 U	151 U	209 U	171 U	150 U	249 U
Bis(2-Ethylhexyl)Phthalate	500	22,000	**25700 J**	**4,320**	**5,310**	**12,400**	**7,370**	**3,340**	**16,600**
Benzyl Butyl Phthalate	--	--	**653**	113 U	**313**	**326**	**209**	**131**	**362**
Diethyl Phthalate	--	--	160 U	150 U	120 U	170 U	140 U	120 U	200 U
Dimethyl Phthalate	--	--	**274**	**187**	**457**	167 U	**205**	**150**	200 U
Di-N-Butyl Phthalate	380	1,000	**170 J**	150 U	120 U	170 U	140 U	120 U	**240 J**
Di-N-Octyl Phthalate	39	> 1,100	**883**	*151 U*	*121 U*	**880**	*137 U*	*120 U*	*200 U*
Carbazole	900	1,100	**169**	75 U	**166**	**296**	**84 J**	**88 J**	**180 J**
Hexachlorobenzene	--	--	8.1 U	7.5 U	6 U	8.3 U	6.8 U	6 U	9.9 U
Hexachlorobutadiene	--	--	42 U	38 U	31 U	43 U	35 U	31 U	51 U
1,2,4-Trichlorobenzene	--	--	8.1 U	7.5 U	6 U	8.3 U	6.8 U	6 U	9.9 U
1,2-Dichlorobenzene	--	--	81.4 U	75.3 U	60.3 U	83.5 U	68.4 U	60.1 U	99.7 U
1,4-Dichlorobenzene	--	--	122 U	113 U	90.6 U	125 U	103 U	90.3 U	150 U
Pentachlorophenol	1,200	> 1,200	*1,220 U*	1,130 U	906 U	*1,250 U*	1,030 U	903 U	*1,500 U*

Notes:

Bold: detected result

Italics: method detection limit is greater than one or more screening levels

1. Total PCB and PAH concentrations are calculated using only detected data.

J: estimated value

U: less than method detection limit

Detected concentration is greater than SCO

Detected concentration is greater than CSL

--: not reported or not applicable

µg/kg: micrograms per kilogram

mg/kg: milligrams per kilogram

CSL: Cleanup Screening Level

PAH: polycyclic aromatic hydrocarbon

PCB: polychlorinated biphenyl

SCO: Sediment Cleanup Objective

SCUM II: *Sediment Cleanup Users Manual II*

Table 2

Freshwater Benthic Sediment Cleanup Level Chemical Criteria

Station	SCO Value	CSL Value
CSO-BL-1	Arsenic, cadmium, copper, nickel, silver, total PCBs, total PAHs, di-n-octyl phthalate	Mercury, bis(2-ethyhexyl)phthalate
CSO-BL-2	Arsenic, copper, nickel, silver, total PCBs, bis(2-ethyhexyl)phthalate	None
CSO-BL-3	Arsenic, copper, nickel, silver, total PCBs, total PAHs, bis(2-ethyhexyl)phthalate	None
CSO-BL-4	Total PAHs, bis(2-ethyhexyl)phthalate, di-n-octyl phthalate	None
CSO-BL-5	Arsenic, copper, nickel, silver, total PCBs, bis(2-ethyhexyl)phthalate	None
CSO-BL-6	Arsenic, mercury, nickel, silver, total PCBs, bis(2-ethyhexyl)phthalate	None
CSO-BL-7	Arsenic, nickel, silver, total PCBs, total PAHs, bis(2-ethyhexyl)phthalate	None

Notes:

CSL: Cleanup Screening Level

PAH: polycyclic aromatic hydrocarbon

PCB: polychlorinated biphenyl

SCO: Sediment Cleanup Objective

Figures

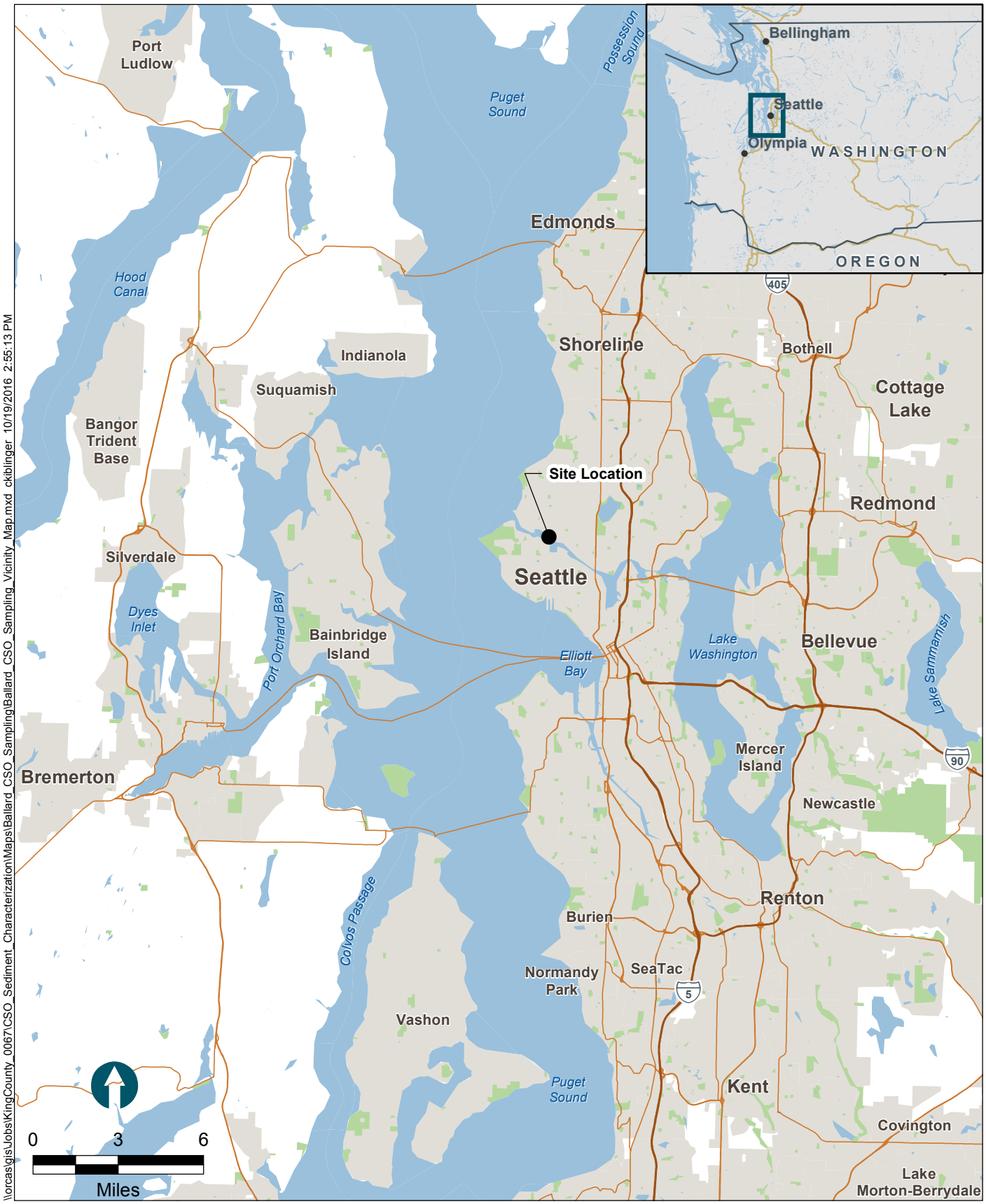

\\orcas\gis\Jobs\KingCounty_0067\CSO_Sediment_Characterization\Maps\Ballard_CSO_Sampling\Ballard_CSO_Sampling_Vicinity_Map.mxd ckiblinger 10/19/2016 2:55:13 PM

ANCHOR QEA

Figure 1
Vicinity Map
Ballard CSO 2015 Data Report
King County CSO Sediment Quality Characterization

Sediment Sampling Locations
Ballard CSO

Feet
0 50 100

\\orcas\gis\Jobs\KingCounty_0067\CSO_Sediment_Characterization\Maps\Ballard_CSO_Sampling\Ballard_CSO_Sample_Locations.mxd ckiblinger 10/19/2016 2:55:33 PM

ANCHOR QEA

Figure 2
Sediment Sampling Locations
Ballard CSO 2015 Data Report
King County CSO Sediment Quality Characterization

Appendix A

Scaling Analysis for Sediment Management Program Sampling

Kevin Schock
October 9, 2015

Equation Chapter 1 Section 1

Kevin Schock
October 9, 2015

Scaling Analysis for SMP Sampling: Ballard Siphon

Scaling Model

A CSO plume width or diameter increases with distance from its origin and the centerline plume velocity decreases with distance. This process can be approximated with a simple analytical model by first considering the plume has a fixed angular spread (Figure 1). A simplified steady-state transport and fate equation is applied and transformed to a radial coordinate system for *x* an *y*.

$$u\frac{dc}{dx}+v\frac{dc}{dy}+w\frac{dc}{dz}=0 \tag{1.1}$$

$$U_r\frac{dc}{dr}+w\frac{dc}{dz}=0 \tag{1.2}$$

Where U_r is the average radial velocity in the plume and *r* is the radius. Letting *w* be the particle settling velocity w_s and integrating over the plume depth results in the desired equation for an expanding plume.

$$U_r h\frac{d\overline{c}}{dr}+w_s\overline{c}=0 \tag{1.3}$$

Where $\overline{c}$ is the average plume concentration and h is the plume depth.

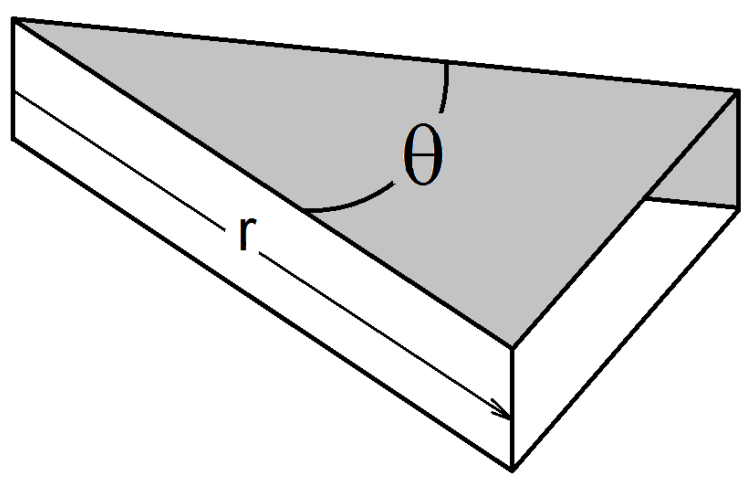

Figure 1. CSO having angle θ and radius r.

Assuming a constant plume flow allows for a simple radial dependent velocity term $U_r=\frac{Q_0}{hr\theta}$.

$$\left(\frac{Q_0}{r\theta}\right)\frac{d\bar{c}}{dr} + w_s\bar{c} = 0$$
$$\frac{d\bar{c}}{\bar{c}} = -\left(\frac{\theta w_s}{Q_0}\right) r dr \qquad (1.4)$$

Where Q_0 is the discharge rate. Equation (2.4) has solution,

$$C_p = C_0 \exp\left(\frac{-w_s \theta r^2}{2Q_0}\right) \qquad (1.5).$$

Where C_p is the suspended solids concentration in the plume and C_0 is initial suspended solids concentration in the CSO. The portion of suspended solids deposited into the sediments has form,

$$m' = 1 - \exp\left(\frac{-w_s \theta r^2}{2Q_0}\right) \qquad (1.6).$$

Where m' is percent of mass deposited in the sediments. The e-folding length scale is $\sqrt{2Q_0 / w_s\theta}$. The angle of the plume is obtained from observations between the plume half width b_w and the radial distance r; b_w/r=0.107 ±0.003 (Fischer et. al., 1979) and $\theta = 2\tan(0.107)^{-1}$.

Ballard Siphon CSO Characteristics and Sample Locations

Typical discharge rates were determined from measured flows acquired in years 2010, 2011, 2013, and 2014 and are present in Table 1 and CSO site characteristics are given in Table 2. Characteristic e-folding length scales for three types of suspended solids area given in

Table 3. Length scales ranged from 6 to 123 meters, a 16 meter length scale will be used because solids spread over a larger area proportional to $r\theta$; detecting deposition increasingly more difficult with increasing radius. A type 3 pattern will be used and is shown relative to the Ballard Siphon CSO outfall location (Figure 2). Sample location State Plane coordinates are given in Table 4.

Table 1. Characteristic flow rates from the Ballard Siphon CSO for years 2010 - 2014.

Percentile	Flow (mgd)
25th	0.46
50th	1.38
75th	3.29
Volume weighted	2.92

Table 2. Site and outfall characteristic near the Ballard Siphon CSO.

Ballard Siphon	Outfall Dia.	Depth @ 0 ft	Depth @ 30 ft	Depth @ 100 ft

	66 in	29 ft	29 ft	29 ft

Table 3. Characteristic e-folding length scales for three settling velocities and discharge rates.

Settling Velocity (m/s)	Flow (mgd)			
	0.46	1.38	3.29	2.92[a]
7.5×10^{-3}	6 (m)	11 (m)	17 (m)	16 (m)
6.2×10^{-4}	22 (m)	39 (m)	60 (m)	57 (m)
1.5×10^{-4}	46 (m)	80 (m)	123 (m)	116 (m)
a. Volume weighted flow				

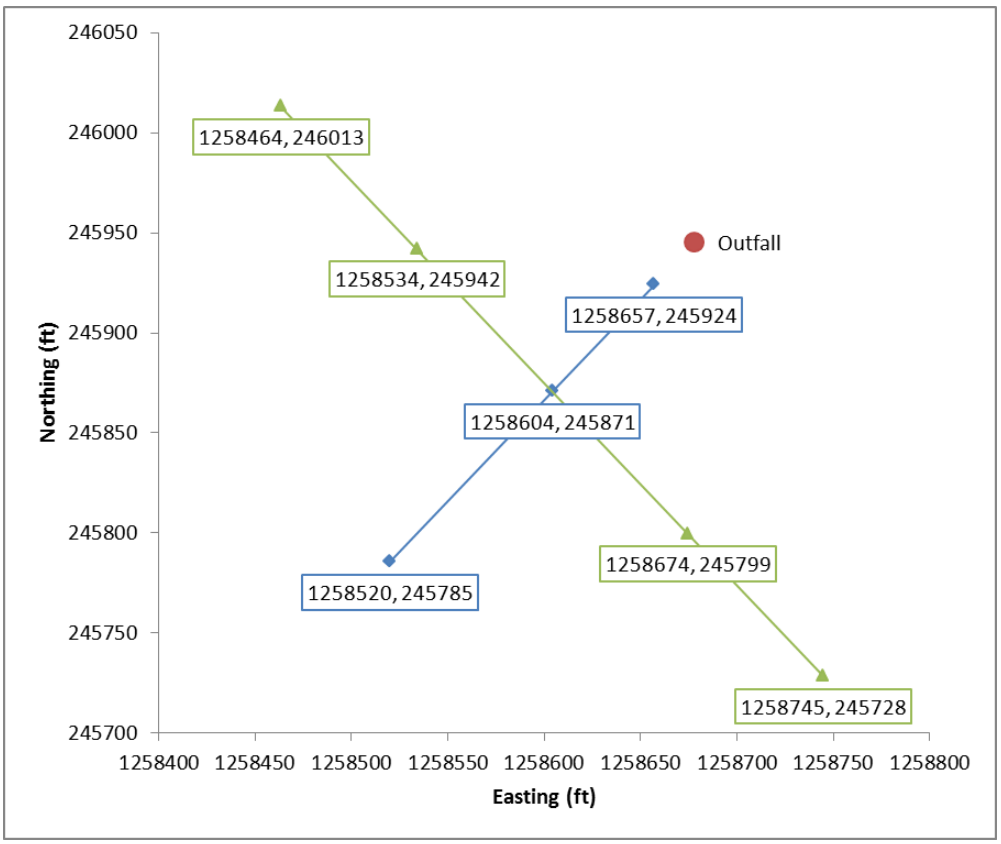

Figure 2. Type 3 pattern for sampling sediments near the Ballard Siphon Outfall. State Plane coordinates are provided for sample locations.

Table 4. State Plane coordinates for sample locations near the Ballard Siphon CSO Outfall.

Easting (ft)	Northing (ft)

Kevin Schock
October 9, 2015

1258657	245924
1258604	245871
1258520	245785
1258674	245799
1258745	245728
1258534	245942
1258464	246013

References:

Fischer, Hugo B., E. John List, Robert C.Y. Koh, Jorg Imberger, and Norman H. Brooks, 1979. Mixing in Iland and Coastal Waters. Academic Press, Inc.

Appendix B

Data Validation Review and Laboratory QA1 Report

720 Olive Way, Suite 1900
Seattle, Washington 98101
Phone 206.287.9130
Fax 206.287.9131
www.anchorqea.com

DATA VALIDATION REVIEW REPORT – EPA STAGE 2A

Project:	King County Ballard Combined Sewer Overflow Sediment Quality Characterization
Project Number:	140067-01.01
Date:	October 28, 2016

This report summarizes the review of analytical results for seven sediment samples collected on October 14, 2015. The samples were collected by King County and submitted to the King County Environmental Lab (KCEL) in Seattle, Washington. The samples were analyzed for the following parameters:

- Total organic carbon (TOC) by U.S. Environmental Protection Agency (USEPA) Method 9060 and Puget Sound Estuary Program (PSEP) protocols
- Particle size distribution (PSD) by ASTM International (ASTM) Method D422 and PSEP protocols
- Total solids (TS) by Standard Method (SM) 2540G
- Metals by USEPA Methods 6020A and 7471B
- Base/neutral/acid semivolatile organic compounds (BNAs) by USEPA Method 8270D
- Polychlorinated biphenyls (PCBs) by USEPA Method 8082A

KCEL sample data group (SDG) numbers L63934 and L64264 were reviewed in this report. Samples reviewed in this report are presented in Table 1.

Table 1
Samples Reviewed

Sample ID	Lab ID	Matrix	Analyses Requested
CSO-BL-1	L63934-1	Sediment	TOC, TS, PSD, metals
CSO-BL-2	L63934-2	Sediment	TOC, TS, PSD, metals
CSO-BL-3	L63934-3	Sediment	TOC, TS, PSD, metals
CSO-BL-4	L63934-4	Sediment	TOC, TS, PSD, metals
CSO-BL-5	L63934-5	Sediment	TOC, TS, PSD, metals
CSO-BL-6	L63934-6	Sediment	TOC, TS, PSD, metals
CSO-BL-7	L63934-7	Sediment	TOC, TS, PSD, metals
CSO-BL-1	L64264-1	Sediment	BNAs, PCBs
CSO-BL-2	L64264-2	Sediment	BNAs, PCBs
CSO-BL-3	L64264-3	Sediment	BNAs, PCBs
CSO-BL-4	L64264-4	Sediment	BNAs, PCBs
CSO-BL-5	L64264-5	Sediment	BNAs, PCBs
CSO-BL-6	L64264-6	Sediment	BNAs, PCBs
CSO-BL-7	L64264-7	Sediment	BNAs, PCBs

Note: BNA and PCB samples were decanted prior to analysis.

Data Validation and Qualifications

The following comments refer to the laboratory's performance in meeting the quality assurance/quality control (QA/QC) guidelines outlined in the analytical procedures and data quality objective sections of the project Sampling and Analysis Plan (SAP; King County 2011). Laboratory results were reviewed using the following validation guidelines:

- *USEPA Contract Laboratory Program National Functional Guidelines for Superfund Organic Methods Data Review* (USEPA 2008)
- *USEPA Contract Laboratory Program National Functional Guidelines for Inorganic Superfund Data Review* (USEPA 2010)

Laboratory and method QC criteria were also used as stated in USEPA 1986 (SW-846, Third Edition), *Test Methods for Evaluating Solid Waste: Physical/Chemical Methods*, update 1, August 1993; update II, January 1995; update IIA, February 1994; update IIB, August 1995; update III, June 1997; update IIIA, May 1999; update IIIB, June 2008; and updates IVA and

IVB, January 2008. Unless noted in this report, laboratory results for the samples listed above were within QC criteria.

Field Documentation

Field documentation was checked for completeness and accuracy. The chain-of-custody forms were signed by KCEL at the time of sample receipt; the samples were received cold and in good condition.

Holding Times and Sample Preservation

Samples were appropriately preserved and analyzed within holding times. Samples that can be frozen to extend hold times were frozen upon receipt at the laboratory.

Laboratory Method Blanks

Laboratory method blanks were analyzed at the required frequencies. All method blanks were free of target analytes.

Field Quality Control

Field quality control samples were not required in association with this sample set.

Surrogate Recoveries

All field samples had surrogate recoveries within the laboratory control limits.

Laboratory Control Sample and Laboratory Control Sample Duplicate

Laboratory control samples (LCS) were analyzed at the required frequencies. Laboratory control sample duplicates (LCSD) were also analyzed for some tests, although not required. All LCS/LCSD analyses yielded percent recovery and/or relative percent difference (RPD) values within laboratory control limits.

Spike Blanks

Spike blank (SB) samples were analyzed at the required frequencies. All SB analyses yielded percent recovery and/or RPD values within project-required control limits, with the

exception of PCBs. Aroclor 1242 recovered below the laboratory control limit in the SB. All detect and non-detect Aroclor 1242 results were qualified as estimated (J-qualifier added).

Standard Reference Materials

Per the SAP (King County 2011), standard reference materials should have been analyzed for TOC, mercury, other metals, BNAs, and PCBs, if available. The laboratory indicated that standard reference materials (SRMs) were not available for mercury, other metals, and PCBs and that an LCS was analyzed in lieu of an SRM. SRMs for TOC and BNAs were analyzed and within acceptance criteria.

Matrix Spike and Matrix Spike Duplicate

Matrix spike (MS) and matrix spike duplicate (MSD) samples were analyzed at required frequencies. All MS/MSD analyses yielded percent recovery and/or RPD values within laboratory control limits, with a few exceptions:

- Metals: Total antimony recovered below the laboratory control limits in the MS analyzed on sample CSO-BL-3. All antimony results were qualified "J" or "UJ" to indicate a bias. MS percent recoveries could not be accurately quantified because the parent sample concentrations were significantly greater than (> 4x) the spike concentrations, as stated in the four times rule for evaluating MS recoveries (USEPA 2010).
- BNAs: The MS recovery of fluoranthene was below the laboratory control limit; however, the MSD recovered within limits and the average recovery of the MS and MSD and the MS/MSD RPD value were with control limits so no data were qualified. The MSD recovery of di-n-octyl-phthalate was above the laboratory control limit; however, the MS recovered within limits and the average recovery of the MS and MSD and the MS/MSD RPD value were with control limits so no data were qualified. Bis(2-ethylhexyl)phthalate did not recover in the MS; however, the parent sample concentration was significantly greater than (> 4x) the spike concentration so no data were qualified. Although the four times rule is not specified in the National Functional Guidelines guidance for evaluating MS recoveries, the same logic applies for organic sample results.

See Table 2 for qualified data.

Laboratory Duplicates

Laboratory duplicates were analyzed at the required frequencies and results were within project required control limits, with the exception of the duplicate analyzed for PCBs. The duplicate analysis of sample CSO-BL-6 resulted in RPD values above the control limit for Aroclors 1242 and 1260. Associated parent sample results were flagged with a J-qualifier to indicate estimated values. See Table 2 for qualified data.

Method Detection Limits

Most laboratory method detection limits (MDLs) were below the applicable freshwater screening levels. Target analytes with MDLs elevated above the screening levels in one or more samples include 3,4-methylphenol, phenol, di-n-octyl-phthalate, and pentachlorophenol. These compounds are identified in the main report table with italics. No qualifiers are applied.

Compound Quantitation

The second column confirmation RPD for Aroclor 1242 was outside the lab limit of 40% for sample CSO-BL-3. The result was flagged with a J-qualifier to indicate an estimated value. See Table 2 for qualified data.

Overall Assessment

As was determined by this evaluation, the laboratory followed the specified analytical methods and all requested sample analyses were completed. Accuracy was generally acceptable as demonstrated by the surrogate, LCS/LCSD, SB, SRM, and MS/MSD recovery values, with the exceptions noted previously. Precision was also generally acceptable as demonstrated by the laboratory duplicate, MS/MSD, and LCS/LCSD RPD values, with the exceptions noted previously. Most data are deemed acceptable as reported; all other data are acceptable as qualified. Table 2 summarizes the qualifiers applied to sample results reviewed in this report. No data were rejected.

Data Qualifier Definitions

U Indicates the compound or analyte was analyzed for but not detected at or above the specified limit

J Indicates an estimated value

UJ Indicates the compound or analyte was analyzed for but not detected and the specified limit reported is estimated

Table 2
Data Qualification Summary

Sample ID	Parameter	Analyte	Reported Result	Qualified Result	Reason
CSO-BL-1	Metals	Antimony	10 mg/kg	10 J mg/kg	Low MS %R
	PCB	Aroclor 1242	14 J µg/kg	14 J µg/kg	Low SB %R
CSO-BL-2	Metals	Antimony	4.29 mg/kg	4.29 J mg/kg	Low MS %R
	PCB	Aroclor 1242	9 U µg/kg	9 UJ µg/kg	Low SB %R
CSO-BL-3	Metals	Antimony	5.22 mg/kg	5.22 J mg/kg	Low MS %R
	PCB	Aroclor 1242	14 J µg/kg	14 J µg/kg	2nd column >40%, Low SB %R
CSO-BL-4	Metals	Antimony	3.56 mg/kg	3.56 J mg/kg	Low MS %R
	PCB	Aroclor 1242	10 U µg/kg	10 UJ µg/kg	Low SB %R
CSO-BL-5	Metals	Antimony	6.17 mg/kg	6.17 J mg/kg	Low MS %R
	PCB	Aroclor 1242	8.2 U µg/kg	8.2 UJ µg/kg	Low SB %R
CSO-BL-6	Metals	Antimony	8.3 mg/kg	8.3 J mg/kg	Low MS %R
	PCB	Aroclor 1242	10 J µg/kg	10 J µg/kg	Low SB %R, LD High RPD
	PCB	Aroclor 1260	77.4 J µg/kg	77.4 J µg/kg	LD High RPD
CSO-BL-7	Metals	Antimony	6.74 mg/kg	6.74 J mg/kg	Low MS %R
	PCB	Aroclor 1242	12 U µg/kg	12 UJ µg/kg	Low SB %R

µg/kg = microgram per kilogram
%R = percent recovery
LD = laboratory duplicate
mg/kg = milligram per kilogram
MS = matrix spike
RPD = relative percent difference
SB = spike blank

REFERENCES

King County, 2011. *CSO Sediment Quality Characterization Field Sampling and Analysis Plan*. King County Department of Natural Resources and Parks Marine and Sediment Assessment Group. August.

USEPA (U.S. Environmental Protection Agency), 1986. *Test methods for Evaluating Solid Waste: Physical/Chemical Methods*. U.S. Environmental Protection Agency, Office of Solid Waste and Emergency Response. EPA 530/SW-846.

USEPA, 2008. *USEPA Contract Laboratory Program National Functional Guidelines for Superfund Organic Methods Data Review*. U.S. Environmental Protection Agency, Office of Superfund Remediation and Technology Innovation. USEPA 540-R-08-01. June.

USEPA, 2010. *USEPA Contract Laboratory Program National Functional Guidelines for Inorganic Data Review*. U.S. Environmental Protection Agency, Office of Superfund Remediation and Technology Innovation. EPA 540-R-10-011. January.

KING COUNTY ENVIRONMENTAL LABORATORY
QUALITY ASSURANCE REVIEW

For

Ballard CSO Sediment Quality Characterization
October 2015

Prepared by:

_____
Fritz Grothkopp
Laboratory Project Manager

Date:_____

Reviewed by:

_____
Colin Elliott
Quality Assurance Officer

Date:_____

King County Environmental Laboratory
322 West Ewing Street
Seattle, Washington 98119-1507
(206) 684-2300

INTRODUCTION

This quality assurance (QA) narrative is intended to document the QA review conducted on the chemistry analyses performed for the Ballard CSO Sediment Quality Characterization. The QA narrative is organized into the five sections listed below.

- General Comments
- Sample Collection
- Conventional Analyses
- Metal Chemistry
- Organic Chemistry

An overview of the approach used for the QA review is detailed in the *General Comments* section. Additional information specific to each analysis is included in the appropriate analytical section.

This QA review and narrative (specifically defined as QA1) have been conducted in accordance with guidelines established through the Puget Sound Dredged Disposal Analysis (PSDDA) program, Sediment Management Standards (WAC 173-204-610) and the Sediment Cleanup User's Manual II (SCUM II), WDOE 2015. Other approaches incorporated in the QA review have been established through collaboration between the King County Environmental Laboratory (KC Laboratory) and the Washington State Department of Ecology (Ecology) Sediment Management Unit.

The original SAP for this work was prepared in 2011 prior to the implementation of the Freshwater Sediment standards. The SAP for this particular set of sediment samples is a revised/updated version of the original SAP, 2011 CSO Sediment Monitoring SAP - 2015 updates.

GENERAL COMMENTS

Scope of Samples Submitted
This QA review is associated with freshwater sediment samples collected on October 14, 2015 as part of the Ballard CSO Sediment Quality Characterization.

Except where noted in the subcontracting sections of this QA review, all analyses have been conducted by the King County Environmental Laboratory (KCEL). Sediment analytical data are reported with associated data qualifiers and have undergone QA1 review, as summarized in this narrative report.

Completeness
Completeness has been evaluated for this data submission and QA review by considering the following criteria:

- Comparing reported data to the planned project analyses summarized in Table 1.
- Compliance with storage conditions and holding times.
- Frequency of analysis of the complete set of quality control (QC) samples outlined in Table 2.

Subcontracted Analyses
Analyses that have been subcontracted and the issues associated with these subcontracted analyses are noted in this narrative.

Methods
Analytical methods are noted in the applicable analytical sections of this QA review.

Target Lists
The reported target lists have been compared to the target analytes listed in *Table VI - Freshwater Sediment Cleanup Objectives and Cleanup Screening Levels Chemical Criteria* Chapter 173-204 WAC.

Detection Limits
As part of the QA1 review, the detection limits reported for each parameter have been reviewed against the detection limit requirements defined in the SAP. When sample results have been reported as less than the Method Detection Limit (<MDL) and the associated detection limits are higher than those defined in the SAP, the particular samples and parameters have been identified and the circumstances explained. These summaries are included with each analytical section of this QA review.

The KC Laboratory reports include both the reporting detection limit (RDL) and the method detection limit (MDL) for each sample and parameter, where applicable. The RDL is defined as *the minimum concentration of a chemical constituent that can be reliably quantified while t*he MDL is defined as *the minimum concentration of a chemical constituent that can be detected.* Some subcontracted laboratory data are available with an MDL only, in accordance with the subcontracting laboratory policies. For some methods the detection limits reported may vary from sample to sample depending on the amount of sample analyzed and any additional dilutions required.

Storage Conditions and Holding Times
Storage conditions and holding times have been evaluated using guidelines defined in the project SAP. Preparation and analysis holding times for each method are summarized in each analytical section.

Method Blanks
Method blank results have been used to evaluate the possible laboratory contamination of samples. Method blank results have been reviewed for the presence of analytes detected at or greater than the MDL. For analytes where the method blank response was at or above the MDL all associated sample results have been qualified with a B flag based on the rules below.

1. Add a "B" flag to all parameters if the associated blank is ≥ the MDL and the sample result is ≥ MDL but ≤ 5 times the blank.
2. Add a "B2" flag to common organic lab contaminants (Acetone, 2-Butanone, Methylene Chloride, Bis (2-ethylhexyl) Phthalate, Butyl Benzyl Phthalate and Di-n-butyl Phthalate) if the method blank is ≥ the MDL and the sample result is > 5 and ≤ 10 times the blank.
3. Add a "B3" flag to all other parameters if the associated blank is ≥ the MDL and the sample result is > 5 and ≤ 10 times the blank.

Standard Reference Materials
Standard reference material (SRM) recoveries have been used to evaluate possible low or high analytical bias on a batch-specific basis. SRM analysis is included with metals and selected organic and conventional parameters (see Table 2). SRMs are purchased from outside agencies (NIST or NRCC) and must have a certified analyte value in order for a particular parameter to be evaluated. All associated sample results for the certified analytes are flagged if the SRM recoveries are unacceptable. Associated sample results may be flagged with a JL whenever recoveries are measured above the acceptance limits and may be flagged with a JG when recoveries are measured below the acceptance limits.

Matrix Spikes
Matrix spike recoveries have been used to evaluate possible low or high analytical bias on a matrix and batch-specific basis. Matrix spikes are analyzed with metals, organics and selected conventionals parameters (see Table 2). Associated sample results may be flagged with a JL whenever recoveries are measured above the acceptance limits and may be flagged with a JG when recoveries are measured below the acceptance limits (but at or above 10%).

For Metals only, matrix spike recovery results are used to qualify sample data only when the sample levels in the spiked sample are less than 4 times the spiked concentration. High sample levels relative to the spiked concentration can compromise the measurement of accurate spike recoveries.

Laboratory Replicate Samples
Replicate analysis (laboratory duplicates or triplicates) is used as an indicator of method precision and is used to qualify data on an analyte and batch-specific basis. Not all replicate data are used, however, as an indicator for data qualification. Only sets of replicate results which include at least one result greater than the RDL are considered for data qualification. These guidelines have been used to account for the fact that precision obtained near the detection limit is not representative of precision obtained throughout the entire analytical range. Associated results may be flagged with a J or JK whenever the measured precision is unacceptable (greater than the acceptance limit).

Surrogates
Surrogate recoveries have been used to evaluate possible low or high analytical bias on a sample-specific basis. Surrogates are only analyzed for organic parameters. Individual sample results may be flagged with a JL whenever recoveries are measured above the acceptance limits and may be flagged with a JG when recoveries are measured below the acceptance limits.

Data Qualifiers

The data qualification guidelines described above has been summarized in Table 3. This table conforms to the guidelines in SCUM II and also shows the data qualifiers used for the Washington Dept. of Ecology EIM electronic data format.

Units and Significant Figures

Units and the reporting basis vary, depending on the parameter and are explained in the analytical sections below. Data generally have been reported to three significant figures if above the RDL and two significant figures if equal to or below the RDL.

SAMPLE COLLECTION

This section describes sampling activities associated with the collection of 7 freshwater sediment samples on October 14, 2015. All sampling activities were conducted following guidance suggested in the Puget Sound Protocols (PSEP, 1996 and 1998).

Sampling Locations and Station Positioning
Sampling locations (stations) were selected and the prescribed coordinates determined prior to field activities. Stations are normally selected to match existing stations from the Pre-Construction monitoring program, however, Pre-Construction monitoring was not done at this location. The prescribed station coordinates are presented in the following table. Also presented in the table are the actual coordinates recorded during sampling activities. All station coordinates are recorded in state plane coordinate system North American Datum 1983 (NAD83).

Ballard CSO Sediment Characterization, October 2015
Actual and Prescribed Sample Coordinates

Lab Number	Locator	Sub Sample Depth (cm)	Average Sediment Sampling Depth (cm)	Prescribed Northing	Actual Northing	Prescribed Easting	Actual Easting	Offset > 6 m
L63934-1	CSO-BL-1	0-10	17	245924	245923	1258657	1258672	
L63934-2	CSO-BL-2	0-10	15	246013	245999	1258464	1258469	
L63934-3	CSO-BL-3	0-10	17	245942	245927	1258534	1258544	
L63934-4	CSO-BL-4	0-10	17	245871	245871	1258604	1258596	
L63934-5	CSO-BL-5	0-10	17	245799	245787	1258674	1258680	
L63934-6	CSO-BL-6	0-10	15	245728	245571	1258745	1258623	60.6
L63934-7	CSO-BL-7	0-10	17	245785	245795	1258520	1258516	

The actual coordinates for the sample, CSO-BL-6, are different from the values provided by the project manager. The project manager agreed to move the location of this sample based on field observations reported by the field crew while sampling.

Sediment grab samples were collected from the King County research vessel *Chinook*, which is equipped with a differential global positioning system (DGPS). Field coordinates were recorded using DGPS for each deployment of the grab sampler as they contacted the sediment. All field coordinates for individual casts listed in the above table are within the +/- 6 meter accuracy limits as provided by the project manager with the exception of L63934-6. The original location for this sample was behind a boathouse and therefore was not accessible.

Sample Collection
Sediment was collected at each station using stainless steel modified 0.1 m^2 Van Veen grab samplers deployed via hydrowire. For each acceptable deployment, between 15-17 cm of sediment was recovered, allowing sub-sampling from the top 10 cm.

Water depth at the sample stations ranged between 4 and 10 meters.

Sample Handling
At each station, approximately equal amounts of sediment from top 10 cm were subsampled using a large stainless steel spoon. These aliquots were placed into a stainless steel compositing bowl, covered with foil between grab deployments. After all aliquots had been collected for that station, the sediment within the bowl was thoroughly homogenized and split out into pre-labeled containers. Sample containers were supplied by the King County Environmental Laboratory and were pre-cleaned according to analytical specifications.

Decontamination
Individual sets of the compositing bowls and sub-sampling and mixing equipment were dedicated to each station, precluding the need for decontamination of this field gear. The Van Veen grab

sampler was decontaminated between stations by scrubbing with a brush and ambient water, followed by a thorough *in situ* rinsing.

Sample Storage and Preservation

All samples were stored in ice-filled coolers from the time of collection until delivery to the King County Environmental Laboratory. They were delivered under chain-of-custody and were maintained as such throughout the analytical process. These samples were stored frozen (-18°C) by the laboratory until analysis with the exception of samples for particle size distribution (PSD) analysis. For this method, samples were stored refrigerated at approximately 4°C. A more complete description of sample handling and storage can be found in each analytical chemistry section of this narrative.

Copies of chain-of-custody forms and field notes are included as an appendix to this QA review narrative. The collect time is defined as that time that sampling commences at each station.

CONVENTIONAL ANALYSES

Completeness
Conventional data are reported for all samples and parameters summarized in Table 1. These samples were analyzed in association with the complete set of QC samples outlined in Table 2.

Subcontracted Analyses
All analyses were performed at the King County Environmental Lab.

Methods
PSD analysis was performed in accordance with ASTM D422 and Puget Sound Protocols methodologies (*Recommended Protocols for Measuring Conventional Sediment Variables in Puget Sound* – page 9 – PSEP, 1986). TOC analysis was performed in accordance with EPA 9060 and PSEP 1996. Total solids analyses were performed in accordance with SM2540-G.

Detection Limits
The detection limits (MDLs) reported for Conventionals parameters are all within the requirements defined in the SAP, except for the following:

Parameter (mg/Kg)	Sample ID#	SAP MDL	Reported MDL	Reason for higher MDL Value
Total Organic Carbon	L63934-1 – 7	500	(1)	Reduced sample size analyzed
PSD	L63934-1 – 7	0.1 and 0.5	(1)	Reduced mass amounts and Totals solids values below 50%.

(1) See attached SAP MDL Comparison table
Where the reported MDL was higher than the SAP MDL, a detectable level was typically measured, therefore project objectives were met. There were some individual PSD parameters and categories where results were not detected above the elevated MDL values. In these cases, the categories with detectable levels generally account for 100% of the material in the samples thus project objectives were not compromised.

Reporting Requirements (significant figures, units, basis and qualifiers)
For analyses performed at the KC Laboratory, data are reported in accordance with laboratory policy at the time the data were generated. Data are reported to three significant figures for results greater than the RDL and two significant figures for results equal to or less than the RDL. For results reported with less than two or three significant figures, significant zeroes are implied. This may not apply to subcontracted data.

In the Comprehensive Report attached, Conventionals parameters are reported in mg/Kg, dry weight basis, for TOC and Particle Size Distribution (PSD). Total Solids is reported in percent, wet weight basis. For all parameters, the MDL and RDL values for each individual sample are reported in the same units and basis as the sample result. Any result measured at less than the MDL or less than the RDL, a <MDL or <RDL qualifier is added, respectively. Other qualifiers added are based on QA/QC failures and are individually explained in this narrative.

Storage Conditions and Holding Times
Sample storage conditions and holding times have been evaluated using guidelines established in the SAP. The dates and holding time criteria for the actual storage conditions used for conventional analyses are listed in the table below.

Parameter	Lab ID#	Date Collected	Prep Date	Date Analyzed	Sample Holding Time	Extract Holding Time
Particle Size Distribution	L63934-1 to 7	14-Oct-15	21-Dec-15	22-Dec-15	6 months at ≤6°C	NA
Total Organic Carbon	L63934-1 to 7	14-Oct-15	26-Oct-15	03 thru 04-Nov-15	6 months at -18°C	6 months at -18°C
Total Solids	L63934-1 to 7, L64264-1 to 7	14-Oct-15	14-Oct-15 19-Nov-15	02-Nov-15 20-Nov-15	6 months at -18°C	NA

Sample storage conditions and holding times were met for all samples in this data submission.

Method Blanks
Method blanks were analyzed in connection with total solids and total organic carbon analyses. All method blanks results were less than the MDL.

Standard Reference Materials
An SRM (Buffalo River Sediment) was analyzed in connection with TOC analysis. The percent recovery for the SRM analysis was within the 80 to 120% QC limits. Note that this sample is reported as a Lab Control Sample (LCS) on the QC report.

Matrix Spikes
The matrix spike recovery for TOC was within the 75 to 125% acceptance limits.

Laboratory Replicate Samples
A set of laboratory triplicates was analyzed for each of the conventional parameters. The percent relative standard deviation (%RSD) for each triplicate set was less than or equal to the 20% acceptance limit.

METALS CHEMISTRY

Completeness
Metal chemistry data are reported for all samples and parameters summarized in Table 1. These samples were analyzed for mercury and other metals in association with the complete set of QC samples outlined in Table 2.

Subcontracted Analyses
Metals analysis was not subcontracted for these sets of samples.

Methods
Mercury analysis was performed in accordance with EPA Method SW846, 7471B. Analysis for other metals was performed in accordance with EPA method SW846, 3050B/6020A.

Target List
The reported target list includes all metals specified in Table 1.

Detection Limits
The wet weight detection limits (MDLs) reported for Metals parameters are all within the requirements defined by the SAP with the exceptions several selected elements in samples L63934-1, -2, -3 and -4. This is not expected to have compromised the project goals since the majority of MDLs reported for those elements were only slightly above the SAP MDLs and meet the SMS SQS values. The wet weight detection limits (MDLs) reported for Mercury are all within the requirements defined by the SAP with the exceptions several samples L63934 -2, -4 and -5. This is not expected to have compromised the project goals since the majority of MDLs reported for Mercury were only slightly above the SAP MDLs and meet the SMS SQS values.

Reporting Requirements (significant figures, units, basis and qualifiers)
For analyses performed at the KC Laboratory, data are reported in accordance with laboratory policy at the time the data were generated. Data are reported to three significant figures for results greater than the RDL and two significant figures for results equal to or less than the RDL. For results reported with less than two or three significant figures, significant zeroes are implied.

In the Comprehensive Report attached, Metals parameters are reported in mg/Kg, dry weight basis, for all elements. The MDL and RDL values for each individual sample are reported in the same units and basis as the sample result. Any result measured at less than the MDL or less than the RDL, a <MDL or <RDL qualifier is added, respectively. Other qualifiers added are based on QA/QC failures and are individually explained in this narrative.

Storage Conditions and Holding Times
Sample storage conditions and holding times have been evaluated using guidelines in SCUM II The dates and holding time criteria for the actual storage conditions used for metals analyses are listed in the table below.

Parameter	Lab ID#	Date Collected	Date Digested/ Extracted	Date Analyzed	Sample Holding Time	Digestate/Extract Holding Time
Total Metals	L63934-1 – 7	14-Oct-15	10-Dec-15 18-Dec-15	15-Dec-15 22-Dec-15	2 Years at -18°C	6 months
Total Mercury	L63934-1 – 7	14-Oct-15	16-Oct-15	19-Oct-15	28 days at -18°C	NA

Sample storage conditions and holding times were met for all samples in this data submission.

Method Blanks
All metals method blanks results were less than the MDL.

Standard Reference Materials
A QC sample that met the full definition of an SRM for freshwater sediments was not available at the time of analysis. Three different Lab Control Samples (LCS) were analyzed to verify accuracy of the methods. Acceptance limits for selected elements have been developed using historical lab data since the certified values and limits were sometimes determined with different analysis techniques. Recoveries outside these lab-defined limits indicate the method has not performed as expected and the sample data have been qualified to indicate the expected bias.

All metals LCS recoveries were within the lab defined limits.

Matrix Spikes
All matrix spike recoveries for target parameters were within the 75% to 125% QC limits with the following exception.

The recovery of antimony was outside the lower control limit in batch WG143422 for Total Metals. The result was flagged with an "*" in the QC report. The sample result for antimony for sample L64934-3 was flagged with a "JG" qualifier.

Note: When the sample concentration is at or above 4 times the spiked concentration, the percent recovery is not calculated or compared to the acceptance limits. This was the case for selected parameters in the matrix spikes tested for total metals.

Laboratory Replicate Samples
The relative percent differences (RPDs) for laboratory duplicate results for all metals were less than or equal to the QC limit of 20%.

ORGANIC CHEMISTRY

Completeness

Organics data are reported for all samples and parameters summarized in Table 1. These samples were analyzed in association with the complete set of QC samples outlined in Table 2. The organic analysis fraction of the sediment samples was separated into a different lab number to allow the samples to be dewatered. Dewatering was done to increase the percent solids in the sample to help achieve better detection limits in the samples.

Methods

BNA analysis was performed in accordance with EPA method 3550B / 8270D. PCB analysis was performed in accordance with EPA methods 3550B / 8082A.

Target List

The reported BNA target list includes all compounds specified in *Table 4 – Freshwater Sediment Cleanup Objectives and Cleanup Screening Levels Chemical Criteria (WAC 173-204-563)* with these exceptions:.

1) The KC Laboratory reports total benzo(b,j,k)fluoranthene and 3-,4-methyphenol results using the combined responses for the individual isomers. Note that only the 4-methylphenol has an SQO limit. The results for 3-,4-Methylphenol were compared to the 4-methylphenol SQO limit.
2) Beta-Hexachlorocyclohexane, Dibutyltin, Dieldren, Endrin Ketone, Monobutyltin, Tributyltin and Tetrabutyltin, Total Petroleum Hydrocarbons (TPH) – Diesel and Total Petroleum Hydrocarbons (TPH) - Residual were not analyzed for these samples.

Reported PCB data include Aroclors 1016, 1221, 1232, 1242, 1248, 1254, 1260 and 1268.

Detection Limits, Units and Significant Figures

The sample detection limits (MDLs), as reported on a wet weight basis for Organics parameters, generally did not meet the requirements defined in the SAP. . These are noted below:

BNA

The reported wet weight MDLs for all semi volatile compounds were above the SAP MDL (See SAP MDL Comparison table) for all samples (L64264-1 to 7) due to necessary dilution for proper quantification.

PCB

The reported MDLs, on a wet weight basis, for Aroclors met the SAP MDL requirements.

The freshwater sediment SMS SQO values are only corrected to dry weight and are not corrected for TOC in the sample. The SMS Dry Weight Comparison table is attached showing the reported RDL values for each sample converted to a dry weight basis. All target compounds met the SMS Dry Weight SQO levels with the exception of 3-,4-methylphenol, di-n-octyl phthalate and phenol in samples L64264-1 to -7 and pentachlorophenol in samples L64264-1, -4 and -7 due to low total solids or necessary dilution of the sample.

Reporting Requirements (significant figures, units, basis and qualifiers)

For analyses performed at the KC Laboratory, data are reported in accordance with laboratory policy at the time the data were generated. Data are reported to three significant figures for results greater than the RDL and two significant figures for results equal to or less than the RDL. For results reported with less than two or three significant figures, significant zeroes are implied.

In the Comprehensive Report attached, Organics parameters are reported in ug/Kg, dry weight basis. In this report format, non-ionizable organic parameters have not been converted to mg/Kg TOC. For all parameters, the MDL and RDL values for each individual sample are reported in the same units and basis as the sample result. Any result measured at less than the MDL or less

than the RDL, a <MDL or <RDL qualifier is added, respectively. Other qualifiers added are based on QA/QC failures and are individually explained in this narrative.

Storage Conditions and Holding Times

Sample storage conditions and holding times have been evaluated using guidelines established in the SCUM II. The dates and holding time criteria for the actual storage conditions used for organics analyses are listed in the table below.

Parameter	Lab ID#	Date Collected	Date Extracted	Date Analyzed	Sample Holding Time	Extract Holding Time
BNA	L64264-1 to -7	14-Oct-15	24-Nov-15	11-Dec-15	1 year at -18°C	40 days at 4°C
PCB	L64264-1 to -7	14-Oct-15	25-Nov-15	15-Dec-15	1 year at -18°C	40 days at 4°C

Sample storage conditions and holding times were met for all samples in this data submission.

Method Blanks

Method blanks were analyzed for all Organics parameters and all method blank compound results were less than the MDL.

Surrogate Recoveries

Surrogate recovery acceptance limits for sediment samples have been developed based on historical lab performance using the current analytical methods. Recoveries measured above the acceptance limits may be flagged with a JL. Recoveries measured below the acceptance limits may be flagged with a JG. Surrogate recovery summaries for each method are shown below.

1. BNA

For BNA sample data, surrogate recoveries are evaluated separately for the acid and base/neutral fractions. Within each fraction, 2 or more surrogates must be outside the acceptance limits in order to qualify the associated sample data. All BNA surrogate recoveries for samples were within the criteria with the exception of 2,4,6-Tribromo phenol in the method blank.

2. PCB

Sample data are qualified when individual surrogate recoveries are outside lab-specific acceptance limits. All PCB surrogate recoveries were within the lab-specific acceptance limits for all samples in this data submission.

Standard Reference Materials (SRMs)

The SRM results associated with these samples are summarized below, according to the analysis method. Acceptance limits for the certified parameters reported in this data set have been developed using historical lab data. SRM recoveries outside these lab-defined limits indicate the method has not performed as expected and the associated sample data should be flagged.

1. BNA

The sediment SRM analyzed in association with the reported BNA results is 1944, certified by the National Institute of Standards and Technology (NIST). The certified organics parameters in SRM 1944 are only a partial list of all the BNA compounds reported in this analysis. All measured recoveries for this SRM were within acceptance limits for this data set.

2. PCB

The sediment SRM was not available at the time of sample preparation and analysis.

Matrix Spikes

Matrix Spikes have been analyzed for each method. Recovery acceptance limits for each parameter in sediment have been developed based on historical lab performance using the current analytical methods. When applicable, matrix spike recoveries outside these lab-defined

limits indicate the method has not performed as expected and the associated sample data have been flagged.

1. BNA
Each of the reported BNA compounds was included in the matrix spike and measured recoveries for each were within their acceptance limits with the following exceptions. These deviations are most likely due to matrix interferences. All other QC results are within limits therefore no data has been qualified.

Parameter	MS % Rec.	Lab Limit	MSD % Rec.
Fluoranthene	51	53--144	
Bis(2-Ethylhexyl)Phthalate	-33	54--150	
Di-N-Octyl Phthalate		43--150	151

2. PCB
Aroclor 1260 and 1242 only are used as the spiking parameters for PCB matrix spike. The measured recovery for each spiked parameter was within their acceptance limits. The SAP indicates that Aroclor 1016 will be used as one of the spiked parameters. Aroclor 1242 was used instead to avoid interference issues from background levels of Aroclor 1242 on the measurement of Aroclor 1016.

Laboratory Replicate Samples
A laboratory duplicate sample(s) was analyzed for each Organics parameter. The relative percent differences (RPDs) for laboratory duplicate for all parameters at or above the RDL were less than or equal to the acceptance limit of 35% with the following exceptions.

PCB
Aroclor 1254 and 1260 in the laboratory duplicate of sample L64264-6 in batch WG143170 were outside the RPD limit. The results have been flagged with an "*" in the QC report and with a "J" qualifier in the sample L64264-6 and should be considered estimates.

Additional QA Issues:

The inter column RPD for Aroclor 1242 was outside the lab limit of 40% for sample L64264-3. The results for this parameter have been flagged with a "J" qualifier to indicate an estimated value.

TABLE 1
SEDIMENT SAMPLE INVENTORY

Sample	Locator / Description	PSD	Solids	TOC	Metals[1]	BNA[2]	PCB	Comments
L63934-1	CSO-BL-1	X	X	X	X			
L63934-2	CSO-BL-2	X	X	X	X			
L63934-3	CSO-BL-3	X	X	X	X			
L63934-4	CSO-BL-4	X	X	X	X			
L63934-5	CSO-BL-5	X	X	X	X			
L63934-6	CSO-BL-6	X	X	X	X			
L63934-7	CSO-BL-7	X	X	X	X			
L64264-1	CSO-BL-1					X	X	
L64264-2	CSO-BL-2					X	X	
L64264-3	CSO-BL-3					X	X	
L64264-4	CSO-BL-4					X	X	
L64264-5	CSO-BL-5					X	X	
L64264-6	CSO-BL-6					X	X	
L64264-7	CSO-BL-7					X	X	

1 Metals = Hg, Sb, As, Cd, Cr, Cu, Pb, Ni, Ag, Zn
2 BNA = includes Chlorobenzenes

TABLE 2
QC SAMPLE FREQUENCY FOR SEDIMENT CHEMICAL AND PHYSICAL PARAMETERS

Parameter	Method Blank	Duplicate	Triplicate	Matrix Spike	SRM	Surrogates
PSD	No	See Triplicate	5% minimum, 1 per QC batch	No	No	No
Total Solids	1 per QC batch	See Triplicate	5% minimum, 1 per QC batch	No	No	No
TOC	1 per QC batch	See Triplicate	5% minimum, 1 per QC batch	5% minimum, 1 per QC batch	1 per QC batch	No
Metals	1 per QC batch	5% minimum, 1 per QC batch	No	5% minimum, 1 per QC batch	1 per QC batch*	No
BNA	1 per QC batch	5% minimum, 1 per QC batch	No	5% minimum, 1 per QC batch	1 per QC batch	Yes
PCB	1 per QC batch	5% minimum, 1 per QC batch	No	5% minimum, 1 per QC batch	Not available	Yes

* An SRM is not currently available for freshwater sediments. Lab Control Samples (LCS) was analyzed instead.

TABLE 3 - SUMMARY OF SEDIMENT DATA QUALIFIERS

Condition to Qualify	King County Data Qualifier	Possible EIM Data Qualifier	Organic QC Limits	Metal QC Limits	Conventional QC Limits	Comment
low matrix spike recovery	JG	JG	Compound specific	< 75%	< 75%	
high matrix spike recovery	JL	JL	Compound specific	>125%	>125%	
low standard reference material recovery	JG	JG	Compound and SRM specific	Element and LCS specific	< 80%	
high standard reference material recovery	JL	JL	Compound and SRM specific	Element and LCS specific	>120%	
high duplicate relative percent difference	JK or J	JK or J	>35 %	>20%	NA	for organics and metals
high triplicate relative standard deviation	JK or J	JK or J	NA	NA	> 20%	for conventionals
less than the reporting detection limit	<RDL**	JT	NA	NA	NA	
less than the method detection limit	<MDL	U	NA	NA	NA	
contamination detected in method blank	B	UJ	MB >/=MDL & Result </= 5x Blank	MB >/=MDL & Result </= 5x Blank	MB >/=MDL & Result </= 5x Blank	
contamination detected in method blank	B2	UJ	MB >/=MDL & Result > 5x but </= 10x Blank	NA	NA	Common Lab Contaminants*
contamination detected in method blank	B3	UJ	MB >/=MDL & Result > 5x but </= 10x Blank	MB >/=MDL & Result > 5x but </= 10x Blank	MB >/=MDL & Result > 5x but </= 10x Blank	All other parameters
biased data based on low surrogate recoveries	JG	JG	Surrogate specific	NA	NA	At least 2 surrogates < limit for BNA
biased data based on high surrogate recoveries	JL	JL	Surrogate specific	NA	NA	At least 2 surrogates > limit for BNA
rejected - unusable for all purposes	R	Q	NA	NA	NA	Case-by-case basis
a sample handling criteria has not been met	SH	JK or J	NA	NA	NA	container, preservation
Holding time not met	H	JK or J				

*COMMON LAB CONTAMINANTS: ACETONE, 2-BUTANONE, METHYLENE CHLORIDE, BIS(2-ETHYLHEXYL) PHTHALATE, BUTYL BENZYL PHTHALATE AND DI-N-BUTYL PHTHALATE (ORGANICS ONLY)

Sample Results Tables

King County Environmental Lab Analytical Report

	Project:	423368-210-1					Project:	423368-210-1					Project:	423368-210-1							
	Locator:	CSO-BL-1					Locator:	CSO-BL-2					Locator:	CSO-BL-3							
	Descrip:	BALLARD CSO					Descrip:	BALLARD CSO					Descrip:	BALLARD CSO							
	Sample:	L63934-1					Sample:	L63934-2					Sample:	L63934-3							
	Matrix:	SE FRSHWTRSED					Matrix:	SE FRSHWTRSED					Matrix:	SE FRSHWTRSED							
	ColDate:	10/14/15 7:54					ColDate:	10/14/15 8:30					ColDate:	10/14/15 8:58							
	TotalSolid:	17.9					TotalSolid:	22					TotalSolid:	29.3							
	DRY Weight Basis						**DRY Weight Basis**						**DRY Weight Basis**								
Parameters	**Value**	**Qual**	**MDL**	**RDL**	**Units**		**Value**	**Qual**	**MDL**	**RDL**	**Units**		**Value**	**Qual**	**MDL**	**RDL**	**Units**				
CV ASTM D422																					
Fines*	77.8		2.9	5.8	%		71.8		2.5	5	%		55.2		1.7	3.5	%				
Gravel*		<MDL	0.6	5.8	%			<MDL	0.5	5	%		0.4	<RDL	0.4	3.5	%				
Sand*	12.8		0.6	5.8	%		21.6		0.5	5	%		40.8		0.4	3.5	%				
Silt*	74.9		2.9	5.8	%		66.9		2.5	5	%		51.8		1.7	3.5	%				
Clay*	2.9	<RDL	2.9	5.8	%		5	RDL	2.5	5	%		3.5	RDL	1.7	3.5	%				
p+0.00*		<MDL	0.6	5.8	%		0.6	<RDL	0.5	5	%		0.7	<RDL	0.4	3.5	%				
p+1.00*	0.9	<RDL	0.6	5.8	%		2.1	<RDL	0.5	5	%		3.1	<RDL	0.4	3.5	%				
p+10.0(equal/more than)*		<MDL	2.9	5.8	%		2.5	<RDL	2.5	5	%		3.5	RDL	1.7	3.5	%				
p+2.00*	1.3	<RDL	0.6	5.8	%		1.5	<RDL	0.5	5	%		10.2		0.4	3.5	%				
p+3.00*	2.5	<RDL	0.6	5.8	%		4.5	<RDL	0.5	5	%		14.8		0.4	3.5	%				
p+4.00*	8.1		0.6	5.8	%		12.9		0.5	5	%		11.9		0.4	3.5	%				
p+5.00*	43.2		2.9	5.8	%		29.7		2.5	5	%		24.2		1.7	3.5	%				
p+6.00*	5.8	RDL	2.9	5.8	%		9.9		2.5	5	%		6.9		1.7	3.5	%				
p+7.00*	17.3		2.9	5.8	%		17.3		2.5	5	%		13.8		1.7	3.5	%				
p+8.00*	8.6		2.9	5.8	%		9.9		2.5	5	%		6.9		1.7	3.5	%				
p+9.00*	2.9	<RDL	2.9	5.8	%		2.5	<RDL	2.5	5	%			<MDL	1.7	3.5	%				
p-1.00*		<MDL	0.6	5.8	%			<MDL	0.5	5	%		0.4	<RDL	0.4	3.5	%				
p-2.00(less than)*		<MDL	0.6	5.8	%			<MDL	0.5	5	%			<MDL	0.4	3.5	%				
p-2.00*		<MDL	0.6	5.8	%			<MDL	0.5	5	%			<MDL	0.4	3.5	%				
CV SM2540-G																					
Total Solids*	17.9		0.005	0.01	%		22		0.005	0.01	%		29.3		0.005	0.01	%				
CV SW846 9060 PSEP96																					
Total Organic Carbon	106000		15000	30100	mg/Kg		48200		14000	28100	mg/Kg		49500		11000	22600	mg/Kg				
ES NONE																					
Field Personnel*	BK, CB				none		BK, CB				none		BK, CB				none				
Sampcoordx1*	1258672				ft		1258469				ft		1258544				ft				
Sampcoordy1*	245923				ft		245999				ft		245927				ft				
Sampling Method*	20132				none		20132				none		20132				none				
Sediment Sampling Depth*	17				cm		15				cm		17				cm				
Sediment Sampling Range*	10				cm		10				cm		10				cm				
Sediment Type*	20P17				none		32P10				none		23P12				none				
MT SW846 3050B(MODSB)*SW846 6020A																					
Antimony, Total, ICP-MS	10		0.056	0.281	mg/Kg		4.29		0.045	0.229	mg/Kg		5.22	JG	0.034	0.17	mg/Kg				
Arsenic, Total, ICP-MS	18.9		0.14	0.709	mg/Kg		21.1		0.11	0.573	mg/Kg		20.2		0.089	0.44	mg/Kg				
Cadmium, Total, ICP-MS	3.25		0.073	0.355	mg/Kg		1.09		0.059	0.286	mg/Kg		1.39		0.044	0.221	mg/Kg				
Chromium, Total, ICP-MS	69.3		0.28	1.42	mg/Kg		53.6		0.23	1.15	mg/Kg		63.5		0.18	0.884	mg/Kg				
Copper, Total, ICP-MS	480		0.28	2.84	mg/Kg		404		0.23	2.29	mg/Kg		478		0.18	1.77	mg/Kg				
Lead, Total, ICP-MS	325		0.14	0.709	mg/Kg		144		0.11	0.573	mg/Kg		272		0.089	0.44	mg/Kg				
Nickel, Total, ICP-MS	49.7		0.14	0.709	mg/Kg		45.9		0.11	0.573	mg/Kg		52.6		0.089	0.44	mg/Kg				
Silver, Total, ICP-MS	1.09		0.056	0.284	mg/Kg		0.755		0.045	0.229	mg/Kg		0.802		0.034	0.177	mg/Kg				
Zinc, Total, ICP-MS	978		0.73	3.55	mg/Kg		568		0.59	2.86	mg/Kg		491		0.44	2.21	mg/Kg				
MT SW846 7471B																					
Mercury, Total, CVAA	1.44		0.028	0.277	mg/Kg		0.541		0.023	0.231	mg/Kg		0.618		0.017	0.169	mg/Kg				

King County Environmental Lab Analytical Report

	Project:	423368-210-1					Project:	423368-210-1					Project:	423368-210-1				
	Locator:	CSO-BL-1					Locator:	CSO-BL-2					Locator:	CSO-BL-3				
	Descrip:	BALLARD CSO					Descrip:	BALLARD CSO					Descrip:	BALLARD CSO				
	Sample:	L63934-1					Sample:	L63934-2					Sample:	L63934-3				
	Matrix:	SE FRSHWTRSED					Matrix:	SE FRSHWTRSED					Matrix:	SE FRSHWTRSED				
	ColDate:	10/14/15 7:54					ColDate:	10/14/15 8:30					ColDate:	10/14/15 8:58				
	TotalSolid:	17.9					TotalSolid:	22					TotalSolid:	29.3				
	DRY Weight Basis						**DRY Weight Basis**						**DRY Weight Basis**					
Parameters	**Value**	**Qual**	**MDL**	**RDL**	**Units**		**Value**	**Qual**	**MDL**	**RDL**	**Units**		**Value**	**Qual**	**MDL**	**RDL**	**Units**
OR SW846 3550B*SW846 8082A																	
Aroclor 1016																	
Aroclor 1221																	
Aroclor 1232																	
Aroclor 1242																	
Aroclor 1248																	
Aroclor 1254																	
Aroclor 1260																	
Aroclor 1268																	
OR SW846 3550B*SW846 8270D																	
1,2,4-Trichlorobenzene																	
1,2-Dichlorobenzene																	
1,4-Dichlorobenzene																	
1-Methylnaphthalene																	
2,4-Dimethylphenol																	
2-Methylnaphthalene																	
2-Methylphenol																	
3-,4-Methylphenol																	
Acenaphthene																	
Acenaphthylene																	
Anthracene																	
Benzo(a)anthracene																	
Benzo(a)pyrene																	
Benzo(b,j,k)fluoranthene																	
Benzo(g,h,i)perylene																	
Benzoic Acid																	
Benzyl Alcohol																	
Benzyl Butyl Phthalate																	
Bis(2-Ethylhexyl)Phthalate																	
Carbazole																	
Chrysene																	
Dibenzo(a,h)anthracene																	
Dibenzofuran																	
Diethyl Phthalate																	
Dimethyl Phthalate																	
Di-N-Butyl Phthalate																	
Di-N-Octyl Phthalate																	
Fluoranthene																	
Fluorene																	
Hexachlorobenzene																	
Hexachlorobutadiene																	
Indeno(1,2,3-Cd)Pyrene																	
Naphthalene																	
N-Nitrosodiphenylamine																	

King County Environmental Lab Analytical Report

	Project:	423368-210-1					Project:	423368-210-1					Project:	423368-210-1							
	Locator:	CSO-BL-1					Locator:	CSO-BL-2					Locator:	CSO-BL-3							
	Descrip:	BALLARD CSO					Descrip:	BALLARD CSO					Descrip:	BALLARD CSO							
	Sample:	L63934-1					Sample:	L63934-2					Sample:	L63934-3							
	Matrix:	SE FRSHWTRSED					Matrix:	SE FRSHWTRSED					Matrix:	SE FRSHWTRSED							
	ColDate:	10/14/15 7:54					ColDate:	10/14/15 8:30					ColDate:	10/14/15 8:58							
	TotalSolid:	17.9					TotalSolid:	22					TotalSolid:	29.3							
	DRY Weight Basis						**DRY Weight Basis**						**DRY Weight Basis**								
Parameters	**Value**	**Qual**	**MDL**	**RDL**	**Units**		**Value**	**Qual**	**MDL**	**RDL**	**Units**		**Value**	**Qual**	**MDL**	**RDL**	**Units**				
Pentachlorophenol																					
Phenanthrene																					
Phenol																					
Pyrene																					
* Not converted to dry weight basis																					

King County Environmental Lab Analytical Report

	Project:	423368-210-1					Project:	423368-210-1					Project:	423368-210-1							
	Locator:	CSO-BL-4					Locator:	CSO-BL-5					Locator:	CSO-BL-6							
	Descrip:	BALLARD CSO					Descrip:	BALLARD CSO					Descrip:	BALLARD CSO							
	Sample:	L63934-4					Sample:	L63934-5					Sample:	L63934-6							
	Matrix:	SE FRSHWTRSED					Matrix:	SE FRSHWTRSED					Matrix:	SE FRSHWTRSED							
	ColDate:	10/14/15 8:07					ColDate:	10/14/15 9:11					ColDate:	10/14/15 9:41							
	TotalSolid:	29.8					TotalSolid:	18					TotalSolid:	31.8							
	DRY Weight Basis						**DRY Weight Basis**						**DRY Weight Basis**								
Parameters	**Value**	**Qual**	**MDL**	**RDL**	**Units**		**Value**	**Qual**	**MDL**	**RDL**	**Units**		**Value**	**Qual**	**MDL**	**RDL**	**Units**				
CV ASTM D422																					
Fines*	11.2		1.9	3.8	%		80		2.9	5.7	%		51.6		1.6	3.1	%				
Gravel*	10.2		0.4	3.8	%			<MDL	0.6	5.7	%			<MDL	0.3	3.1	%				
Sand*	69		0.4	3.8	%		12.9		0.6	5.7	%		43.6		0.3	3.1	%				
Silt*	11.2		1.9	3.8	%		71.4		2.9	5.7	%		46.9		1.6	3.1	%				
Clay*		<MDL	1.9	3.75	%		8.6		2.9	5.7	%		4.7		1.6	3.1	%				
p+0.00*	4.8		0.4	3.8	%			<MDL	0.6	5.7	%			<MDL	0.3	3.1	%				
p+1.00*	4.8		0.4	3.8	%		0.6	<RDL	0.6	5.7	%		0.5	<RDL	0.3	3.1	%				
p+10.0(equal/more than)*		<MDL	1.9	3.8	%		2.9	<RDL	2.9	5.7	%		1.6	<RDL	1.6	3.1	%				
p+2.00*	22.8		0.4	3.8	%		1.3	<RDL	0.6	5.7	%		6.5		0.3	3.1	%				
p+3.00*	29.5		0.4	3.8	%		4.1	<RDL	0.6	5.7	%		25.7		0.3	3.1	%				
p+4.00*	7.1		0.4	3.8	%		6.9		0.6	5.7	%		10.8		0.3	3.1	%				
p+5.00*	7.5		1.9	3.8	%		34.3		2.9	5.7	%		23.4		1.6	3.1	%				
p+6.00*	1.9	<RDL	1.9	3.8	%		11.4		2.9	5.7	%		7.8		1.6	3.1	%				
p+7.00*		<MDL	1.9	3.8	%		14.3		2.9	5.7	%		7.8		1.6	3.1	%				
p+8.00*	1.9	<RDL	1.9	3.8	%		11.4		2.9	5.7	%		7.8		1.6	3.1	%				
p+9.00*		<MDL	1.9	3.8	%		5.7	RDL	2.9	5.7	%		3.1	RDL	1.6	3.1	%				
p-1.00*	3.1	<RDL	0.4	3.8	%			<MDL	0.6	5.7	%			<MDL	0.3	3.1	%				
p-2.00(less than)*	6.7		0.4	3.8	%			<MDL	0.6	5.7	%			<MDL	0.3	3.1	%				
p-2.00*	0.4	<RDL	0.4	3.8	%			<MDL	0.6	5.7	%			<MDL	0.3	3.1	%				
CV SM2540-G																					
Total Solids*	29.8		0.005	0.01	%		18		0.005	0.01	%		31.8		0.005	0.01	%				
CV SW846 9060 PSEP96																					
Total Organic Carbon	117000		14000	28300	mg/Kg		69400		17000	34300	mg/Kg		45000		14000	27900	mg/Kg				
ES NONE																					
Field Personnel*	BK, CB				none		BK, CB				none		BK, CB				none				
Sampcoordx1*	1258596				ft		1258680				ft		1258623	TA			ft				
Sampcoordy1*	245871				ft		245787				ft		245571	TA			ft				
Sampling Method*	20132				none		20132				none		20132				none				
Sediment Sampling Depth*	17				cm		17				cm		15				cm				
Sediment Sampling Range*	10				cm		10				cm		10				cm				
Sediment Type*	32P17				none		32P12				none		32P12				none				
MT SW846 3050B(MODSB)*SW846 6020A																					
Antimony, Total, ICP-MS	3.56		0.034	0.171	mg/Kg		6.17		0.056	0.277	mg/Kg		8.3		0.031	0.157	mg/Kg				
Arsenic, Total, ICP-MS	6.41		0.087	0.433	mg/Kg		24.9		0.14	0.694	mg/Kg		22.2		0.075	0.381	mg/Kg				
Cadmium, Total, ICP-MS	0.815		0.044	0.216	mg/Kg		1.91		0.067	0.346	mg/Kg		1.06		0.038	0.191	mg/Kg				
Chromium, Total, ICP-MS	21.8		0.17	0.862	mg/Kg		63.9		0.28	1.38	mg/Kg		55.3		0.15	0.764	mg/Kg				
Copper, Total, ICP-MS	116		0.17	1.73	mg/Kg		494		0.28	2.77	mg/Kg		288		0.15	1.53	mg/Kg				
Lead, Total, ICP-MS	102		0.087	0.433	mg/Kg		231		0.14	0.694	mg/Kg		160		0.075	0.381	mg/Kg				
Nickel, Total, ICP-MS	18.5		0.087	0.433	mg/Kg		49.7		0.14	0.694	mg/Kg		43.4		0.075	0.381	mg/Kg				
Silver, Total, ICP-MS	0.186		0.034	0.173	mg/Kg		0.933		0.056	0.277	mg/Kg		0.871		0.031	0.153	mg/Kg				
Zinc, Total, ICP-MS	466		0.44	2.16	mg/Kg		722		0.67	3.46	mg/Kg		390		0.38	1.91	mg/Kg				
MT SW846 7471B																					
Mercury, Total, CVAA	0.16	<RDL	0.017	0.17	mg/Kg		0.628		0.028	0.282	mg/Kg		0.673		0.016	0.157	mg/Kg				

King County Environmental Lab Analytical Report

	Project:	423368-210-1					Project:	423368-210-1					Project:	423368-210-1				
	Locator:	CSO-BL-4					Locator:	CSO-BL-5					Locator:	CSO-BL-6				
	Descrip:	BALLARD CSO					Descrip:	BALLARD CSO					Descrip:	BALLARD CSO				
	Sample:	L63934-4					Sample:	L63934-5					Sample:	L63934-6				
	Matrix:	SE FRSHWTRSED					Matrix:	SE FRSHWTRSED					Matrix:	SE FRSHWTRSED				
	ColDate:	10/14/15 8:07					ColDate:	10/14/15 9:11					ColDate:	10/14/15 9:41				
	TotalSolid:	29.8					TotalSolid:	18					TotalSolid:	31.8				
	DRY Weight Basis						**DRY Weight Basis**						**DRY Weight Basis**					
Parameters	**Value**	**Qual**	**MDL**	**RDL**	**Units**		**Value**	**Qual**	**MDL**	**RDL**	**Units**		**Value**	**Qual**	**MDL**	**RDL**	**Units**
OR SW846 3550B*SW846 8082A																	
Aroclor 1016																	
Aroclor 1221																	
Aroclor 1232																	
Aroclor 1242																	
Aroclor 1248																	
Aroclor 1254																	
Aroclor 1260																	
Aroclor 1268																	
OR SW846 3550B*SW846 8270D																	
1,2,4-Trichlorobenzene																	
1,2-Dichlorobenzene																	
1,4-Dichlorobenzene																	
1-Methylnaphthalene																	
2,4-Dimethylphenol																	
2-Methylnaphthalene																	
2-Methylphenol																	
3-,4-Methylphenol																	
Acenaphthene																	
Acenaphthylene																	
Anthracene																	
Benzo(a)anthracene																	
Benzo(a)pyrene																	
Benzo(b,j,k)fluoranthene																	
Benzo(g,h,i)perylene																	
Benzoic Acid																	
Benzyl Alcohol																	
Benzyl Butyl Phthalate																	
Bis(2-Ethylhexyl)Phthalate																	
Carbazole																	
Chrysene																	
Dibenzo(a,h)anthracene																	
Dibenzofuran																	
Diethyl Phthalate																	
Dimethyl Phthalate																	
Di-N-Butyl Phthalate																	
Di-N-Octyl Phthalate																	
Fluoranthene																	
Fluorene																	
Hexachlorobenzene																	
Hexachlorobutadiene																	
Indeno(1,2,3-Cd)Pyrene																	
Naphthalene																	
N-Nitrosodiphenylamine																	

King County Environmental Lab Analytical Report

	Project:	423368-210-1					Project:	423368-210-1					Project:	423368-210-1							
	Locator:	CSO-BL-4					Locator:	CSO-BL-5					Locator:	CSO-BL-6							
	Descrip:	BALLARD CSO					Descrip:	BALLARD CSO					Descrip:	BALLARD CSO							
	Sample:	L63934-4					Sample:	L63934-5					Sample:	L63934-6							
	Matrix:	SE FRSHWTRSED					Matrix:	SE FRSHWTRSED					Matrix:	SE FRSHWTRSED							
	ColDate:	10/14/15 8:07					ColDate:	10/14/15 9:11					ColDate:	10/14/15 9:41							
	TotalSolid:	29.8					TotalSolid:	18					TotalSolid:	31.8							
	DRY Weight Basis						**DRY Weight Basis**						**DRY Weight Basis**								
Parameters	**Value**	**Qual**	**MDL**	**RDL**	**Units**		**Value**	**Qual**	**MDL**	**RDL**	**Units**		**Value**	**Qual**	**MDL**	**RDL**	**Units**				
Pentachlorophenol																					
Phenanthrene																					
Phenol																					
Pyrene																					
* Not converted to dry weight basis																					

King County Environmental Lab Analytical Report

	Project:	423368-210-1				Project:	423368-210-1				Project:	423368-210-1			
	Locator:	CSO-BL-7				Locator:	CSO-BL-1				Locator:	CSO-BL-2			
	Descrip:	BALLARD CSO				Descrip:	BALLARD CSO				Descrip:	BALLARD CSO			
	Sample:	L63934-7				Sample:	L64264-1				Sample:	L64264-2			
	Matrix:	SE FRSHWTRSED				Matrix:	SE FRSHWTRSED				Matrix:	SE FRSHWTRSED			
	ColDate:	10/14/15 8:16				ColDate:	10/14/15 7:54				ColDate:	10/14/15 8:30			
	TotalSolid:	17.8				TotalSolid:	40.9				TotalSolid:	44.2			
	DRY Weight Basis					**DRY Weight Basis**					**DRY Weight Basis**				
Parameters	**Value**	**Qual**	**MDL**	**RDL**	**Units**	**Value**	**Qual**	**MDL**	**RDL**	**Units**	**Value**	**Qual**	**MDL**	**RDL**	**Units**
CV ASTM D422															
Fines*	74.7		3.4	6.8	%										
Gravel*	2.6	<RDL	0.7	6.8	%										
Sand*	22.5		0.7	6.8	%										
Silt*	74.7		3.4	6.8	%										
Clay*		<MDL	3.4	6.79	%										
p+0.00*	2	<RDL	0.7	6.8	%										
p+1.00*	2.4	<RDL	0.7	6.8	%										
p+10.0(equal/more than)*		<MDL	3.4	6.8	%										
p+2.00*	3	<RDL	0.7	6.8	%										
p+3.00*	6.7	<RDL	0.7	6.8	%										
p+4.00*	8.4		0.7	6.8	%										
p+5.00*	30.5		3.4	6.8	%										
p+6.00*	17		3.4	6.8	%										
p+7.00*	13.6		3.4	6.8	%										
p+8.00*	13.6		3.4	6.8	%										
p+9.00*		<MDL	3.4	6.8	%										
p-1.00*	1.1	<RDL	0.7	6.8	%										
p-2.00(less than)*	1.6	<RDL	0.7	6.8	%										
p-2.00*		<MDL	0.7	6.8	%										
CV SM2540-G															
Total Solids*	17.8		0.005	0.01	%	40.9		0.005	0.01	%	44.2		0.005	0.01	%
CV SW846 9060 PSEP96															
Total Organic Carbon	127000		15000	29200	mg/Kg										
ES NONE															
Field Personnel*	BK, CB				none										
Sampcoordx1*	1258516				ft										
Sampcoordy1*	245795				ft										
Sampling Method*	20132				none										
Sediment Sampling Depth*	17				cm										
Sediment Sampling Range*	10				cm										
Sediment Type*	23P18				none										
MT SW846 3050B(MODSB)*SW846 6020A															
Antimony, Total, ICP-MS	6.74		0.052	0.258	mg/Kg										
Arsenic, Total, ICP-MS	17.2		0.14	0.697	mg/Kg										
Cadmium, Total, ICP-MS	1.58		0.067	0.349	mg/Kg										
Chromium, Total, ICP-MS	48.8		0.28	1.39	mg/Kg										
Copper, Total, ICP-MS	296		0.28	2.79	mg/Kg										
Lead, Total, ICP-MS	173		0.14	0.697	mg/Kg										
Nickel, Total, ICP-MS	37.1		0.14	0.697	mg/Kg										
Silver, Total, ICP-MS	0.674		0.056	0.279	mg/Kg										
Zinc, Total, ICP-MS	792		0.67	3.49	mg/Kg										
MT SW846 7471B															
Mercury, Total, CVAA	0.412		0.027	0.271	mg/Kg										

King County Environmental Lab Analytical Report

	Project:	423368-210-1					Project:	423368-210-1				Project:	423368-210-1			
	Locator:	CSO-BL-7					Locator:	CSO-BL-1				Locator:	CSO-BL-2			
	Descrip:	BALLARD CSO					Descrip:	BALLARD CSO				Descrip:	BALLARD CSO			
	Sample:	L63934-7					Sample:	L64264-1				Sample:	L64264-2			
	Matrix:	SE FRSHWTRSED					Matrix:	SE FRSHWTRSED				Matrix:	SE FRSHWTRSED			
	ColDate:	10/14/15 8:16					ColDate:	10/14/15 7:54				ColDate:	10/14/15 8:30			
	TotalSolid:	17.8					TotalSolid:	40.9				TotalSolid:	44.2			
	DRY Weight Basis						**DRY Weight Basis**					**DRY Weight Basis**				
Parameters	**Value**	**Qual**	**MDL**	**RDL**	**Units**	**Value**	**Qual**	**MDL**	**RDL**	**Units**	**Value**	**Qual**	**MDL**	**RDL**	**Units**
OR SW846 3550B*SW846 8082A															
Aroclor 1016							<MDL	9.8	39.1	ug/Kg		<MDL	9	36.2	ug/Kg
Aroclor 1221							<MDL	29	39.1	ug/Kg		<MDL	27	36.2	ug/Kg
Aroclor 1232							<MDL	29	39.1	ug/Kg		<MDL	27	36.2	ug/Kg
Aroclor 1242						14	<RDL	9.8	39.1	ug/Kg		<MDL	9	36.2	ug/Kg
Aroclor 1248							<MDL	9.8	39.1	ug/Kg		<MDL	9	36.2	ug/Kg
Aroclor 1254						122		7.8	39.1	ug/Kg	92.5		7.2	36.2	ug/Kg
Aroclor 1260						66.5		9.8	39.1	ug/Kg	43.9		9	36.2	ug/Kg
Aroclor 1268						20	<RDL	9.8	39.1	ug/Kg		<MDL	9	36.2	ug/Kg
OR SW846 3550B*SW846 8270D															
1,2,4-Trichlorobenzene							<MDL	8.1	16.3	ug/Kg		<MDL	7.5	15.1	ug/Kg
1,2-Dichlorobenzene							<MDL	81.4	81.4	ug/Kg		<MDL	75.3	75.3	ug/Kg
1,4-Dichlorobenzene							<MDL	122	122	ug/Kg		<MDL	113	113	ug/Kg
1-Methylnaphthalene							<MDL	81	163	ug/Kg		<MDL	75	151	ug/Kg
2,4-Dimethylphenol							<MDL	81	163	ug/Kg		<MDL	75	151	ug/Kg
2-Methylnaphthalene							<MDL	81	163	ug/Kg		<MDL	75	151	ug/Kg
2-Methylphenol							<MDL	81	163	ug/Kg		<MDL	75	151	ug/Kg
3-,4-Methylphenol							<MDL	420	814	ug/Kg		<MDL	380	753	ug/Kg
Acenaphthene						100	<RDL	81	163	ug/Kg		<MDL	75	151	ug/Kg
Acenaphthylene						83	<RDL	81	163	ug/Kg		<MDL	75	151	ug/Kg
Anthracene						208		81	163	ug/Kg	178		75	151	ug/Kg
Benzo(a)anthracene						1350		81	163	ug/Kg	751		75	151	ug/Kg
Benzo(a)pyrene						1990		81	163	ug/Kg	889		75	151	ug/Kg
Benzo(b,j,k)fluoranthene						5840		81	163	ug/Kg	2100		75	151	ug/Kg
Benzo(g,h,i)perylene						733		81	163	ug/Kg	342		75	151	ug/Kg
Benzoic Acid							<MDL	1630	1630	ug/Kg		<MDL	1510	1510	ug/Kg
Benzyl Alcohol							<MDL	204	204	ug/Kg		<MDL	188	188	ug/Kg
Benzyl Butyl Phthalate						653		122	122	ug/Kg		<MDL	113	113	ug/Kg
Bis(2-Ethylhexyl)Phthalate						25700		160	325	ug/Kg	4320		150	301	ug/Kg
Carbazole						169		81	163	ug/Kg		<MDL	75	151	ug/Kg
Chrysene						2370		81	163	ug/Kg	1120		75	151	ug/Kg
Dibenzo(a,h)anthracene						207		81	163	ug/Kg	88	<RDL	75	151	ug/Kg
Dibenzofuran							<MDL	81	163	ug/Kg		<MDL	75	151	ug/Kg
Diethyl Phthalate							<MDL	160	325	ug/Kg		<MDL	150	301	ug/Kg
Dimethyl Phthalate						274		163	163	ug/Kg	187		151	151	ug/Kg
Di-N-Butyl Phthalate						170	<RDL	160	325	ug/Kg		<MDL	150	301	ug/Kg
Di-N-Octyl Phthalate						883		163	163	ug/Kg		<MDL	151	151	ug/Kg
Fluoranthene						3500		81	163	ug/Kg	1880		75	151	ug/Kg
Fluorene						165		81	163	ug/Kg	120	<RDL	75	151	ug/Kg
Hexachlorobenzene							<MDL	8.1	16.3	ug/Kg		<MDL	7.5	15.1	ug/Kg
Hexachlorobutadiene							<MDL	42	81.4	ug/Kg		<MDL	38	75.3	ug/Kg
Indeno(1,2,3-Cd)Pyrene						941		81	163	ug/Kg	439		75	151	ug/Kg
Naphthalene							<MDL	81	163	ug/Kg		<MDL	75	151	ug/Kg
N-Nitrosodiphenylamine							<MDL	204	204	ug/Kg		<MDL	188	188	ug/Kg

King County Environmental Lab Analytical Report

	Project:	423368-210-1					Project:	423368-210-1					Project:	423368-210-1				
	Locator:	CSO-BL-7					Locator:	CSO-BL-1					Locator:	CSO-BL-2				
	Descrip:	BALLARD CSO					Descrip:	BALLARD CSO					Descrip:	BALLARD CSO				
	Sample:	L63934-7					Sample:	L64264-1					Sample:	L64264-2				
	Matrix:	SE FRSHWTRSED					Matrix:	SE FRSHWTRSED					Matrix:	SE FRSHWTRSED				
	ColDate:	10/14/15 8:16					ColDate:	10/14/15 7:54					ColDate:	10/14/15 8:30				
	TotalSolid:	17.8					TotalSolid:	40.9					TotalSolid:	44.2				
	DRY Weight Basis						**DRY Weight Basis**						**DRY Weight Basis**					
Parameters	**Value**	**Qual**	**MDL**	**RDL**	**Units**		**Value**	**Qual**	**MDL**	**RDL**	**Units**		**Value**	**Qual**	**MDL**	**RDL**	**Units**	
Pentachlorophenol								<MDL	1220	1220	ug/Kg			<MDL	1130	1130	ug/Kg	
Phenanthrene							1040		81	163	ug/Kg		550		75	151	ug/Kg	
Phenol								<MDL	420	1220	ug/Kg			<MDL	380	1130	ug/Kg	
Pyrene							4280		81	163	ug/Kg		2180		75	151	ug/Kg	
* Not converted to dry weight basis																		

King County Environmental Lab Analytical Report

	Project:	423368-210-1					Project:	423368-210-1					Project:	423368-210-1							
	Locator:	CSO-BL-3					Locator:	CSO-BL-4					Locator:	CSO-BL-5							
	Descrip:	BALLARD CSO					Descrip:	BALLARD CSO					Descrip:	BALLARD CSO							
	Sample:	L64264-3					Sample:	L64264-4					Sample:	L64264-5							
	Matrix:	SE FRSHWTRSED					Matrix:	SE FRSHWTRSED					Matrix:	SE FRSHWTRSED							
	ColDate:	10/14/15 8:58					ColDate:	10/14/15 8:07					ColDate:	10/14/15 9:11							
	TotalSolid:	55.2					TotalSolid:	39.9					TotalSolid:	48.7							
	DRY Weight Basis						**DRY Weight Basis**						**DRY Weight Basis**								
Parameters	**Value**	**Qual**	**MDL**	**RDL**	**Units**		**Value**	**Qual**	**MDL**	**RDL**	**Units**		**Value**	**Qual**	**MDL**	**RDL**	**Units**				
CV ASTM D422																					
Fines*																					
Gravel*																					
Sand*																					
Silt*																					
Clay*																					
p+0.00*																					
p+1.00*																					
p+10.0(equal/more than)*																					
p+2.00*																					
p+3.00*																					
p+4.00*																					
p+5.00*																					
p+6.00*																					
p+7.00*																					
p+8.00*																					
p+9.00*																					
p-1.00*																					
p-2.00(less than)*																					
p-2.00*																					
CV SM2540-G																					
Total Solids*	55.2		0.005	0.01	%		39.9		0.005	0.01	%		48.7		0.005	0.01	%				
CV SW846 9060 PSEP96																					
Total Organic Carbon																					
ES NONE																					
Field Personnel*																					
Sampcoordx1*																					
Sampcoordy1*																					
Sampling Method*																					
Sediment Sampling Depth*																					
Sediment Sampling Range*																					
Sediment Type*																					
MT SW846 3050B(MODSB)*SW846 6020A																					
Antimony, Total, ICP-MS																					
Arsenic, Total, ICP-MS																					
Cadmium, Total, ICP-MS																					
Chromium, Total, ICP-MS																					
Copper, Total, ICP-MS																					
Lead, Total, ICP-MS																					
Nickel, Total, ICP-MS																					
Silver, Total, ICP-MS																					
Zinc, Total, ICP-MS																					
MT SW846 7471B																					
Mercury, Total, CVAA																					

King County Environmental Lab Analytical Report

	Project:	423368-210-1				Project:	423368-210-1				Project:	423368-210-1			
	Locator:	CSO-BL-3				Locator:	CSO-BL-4				Locator:	CSO-BL-5			
	Descrip:	BALLARD CSO				Descrip:	BALLARD CSO				Descrip:	BALLARD CSO			
	Sample:	L64264-3				Sample:	L64264-4				Sample:	L64264-5			
	Matrix:	SE FRSHWTRSED				Matrix:	SE FRSHWTRSED				Matrix:	SE FRSHWTRSED			
	ColDate:	10/14/15 8:58				ColDate:	10/14/15 8:07				ColDate:	10/14/15 9:11			
	TotalSolid:	55.2				TotalSolid:	39.9				TotalSolid:	48.7			
	DRY Weight Basis					**DRY Weight Basis**					**DRY Weight Basis**				
Parameters	**Value**	**Qual**	**MDL**	**RDL**	**Units**	**Value**	**Qual**	**MDL**	**RDL**	**Units**	**Value**	**Qual**	**MDL**	**RDL**	**Units**
OR SW846 3550B*SW846 8082A															
Aroclor 1016		<MDL	7.2	29	ug/Kg		<MDL	10	40.1	ug/Kg		<MDL	8.2	32.9	ug/Kg
Aroclor 1221		<MDL	22	29	ug/Kg		<MDL	30	40.1	ug/Kg		<MDL	25	32.9	ug/Kg
Aroclor 1232		<MDL	22	29	ug/Kg		<MDL	30	40.1	ug/Kg		<MDL	25	32.9	ug/Kg
Aroclor 1242	14	<RDL,J	7.2	29	ug/Kg		<MDL	10	40.1	ug/Kg		<MDL	8.2	32.9	ug/Kg
Aroclor 1248		<MDL	7.2	29	ug/Kg		<MDL	10	40.1	ug/Kg		<MDL	8.2	32.9	ug/Kg
Aroclor 1254	112		5.8	29	ug/Kg	51.9		8	40.1	ug/Kg	98.2		6.6	32.9	ug/Kg
Aroclor 1260	49.6		7.2	29	ug/Kg	25	<RDL	10	40.1	ug/Kg	56.9		8.2	32.9	ug/Kg
Aroclor 1268		<MDL	7.2	29	ug/Kg		<MDL	10	40.1	ug/Kg		<MDL	8.2	32.9	ug/Kg
OR SW846 3550B*SW846 8270D															
1,2,4-Trichlorobenzene		<MDL	6	12.1	ug/Kg		<MDL	8.3	16.7	ug/Kg		<MDL	6.8	13.7	ug/Kg
1,2-Dichlorobenzene		<MDL	60.3	60.3	ug/Kg		<MDL	83.5	83.5	ug/Kg		<MDL	68.4	68.4	ug/Kg
1,4-Dichlorobenzene		<MDL	90.6	90.6	ug/Kg		<MDL	125	125	ug/Kg		<MDL	103	103	ug/Kg
1-Methylnaphthalene		<MDL	60	121	ug/Kg		<MDL	83	167	ug/Kg		<MDL	68	137	ug/Kg
2,4-Dimethylphenol		<MDL	60	121	ug/Kg		<MDL	83	167	ug/Kg		<MDL	68	137	ug/Kg
2-Methylnaphthalene		<MDL	60	121	ug/Kg		<MDL	83	167	ug/Kg		<MDL	68	137	ug/Kg
2-Methylphenol		<MDL	60	121	ug/Kg		<MDL	83	167	ug/Kg		<MDL	68	137	ug/Kg
3-,4-Methylphenol		<MDL	310	603	ug/Kg		<MDL	430	835	ug/Kg		<MDL	350	684	ug/Kg
Acenaphthene	201		60	121	ug/Kg	95	<RDL	83	167	ug/Kg	120	<RDL	68	137	ug/Kg
Acenaphthylene	100	<RDL	60	121	ug/Kg		<MDL	83	167	ug/Kg		<MDL	68	137	ug/Kg
Anthracene	388		60	121	ug/Kg	444		83	167	ug/Kg	205		68	137	ug/Kg
Benzo(a)anthracene	1540		60	121	ug/Kg	1510		83	167	ug/Kg	877		68	137	ug/Kg
Benzo(a)pyrene	2050		60	121	ug/Kg	1850		83	167	ug/Kg	1110		68	137	ug/Kg
Benzo(b,j,k)fluoranthene	4730		60	121	ug/Kg	4460		83	167	ug/Kg	2980		68	137	ug/Kg
Benzo(g,h,i)perylene	587		60	121	ug/Kg	459		83	167	ug/Kg	419		68	137	ug/Kg
Benzoic Acid		<MDL	1210	1210	ug/Kg		<MDL	1670	1670	ug/Kg		<MDL	1370	1370	ug/Kg
Benzyl Alcohol		<MDL	151	151	ug/Kg		<MDL	209	209	ug/Kg		<MDL	171	171	ug/Kg
Benzyl Butyl Phthalate	313		90.6	90.6	ug/Kg	326		125	125	ug/Kg	209		103	103	ug/Kg
Bis(2-Ethylhexyl)Phthalate	5310		120	241	ug/Kg	12400		170	333	ug/Kg	7370		140	273	ug/Kg
Carbazole	166		60	121	ug/Kg	296		83	167	ug/Kg	84	<RDL	68	137	ug/Kg
Chrysene	2430		60	121	ug/Kg	2660		83	167	ug/Kg	1340		68	137	ug/Kg
Dibenzo(a,h)anthracene	181		60	121	ug/Kg	160	<RDL	83	167	ug/Kg	110	<RDL	68	137	ug/Kg
Dibenzofuran	72	<RDL	60	121	ug/Kg		<MDL	83	167	ug/Kg		<MDL	68	137	ug/Kg
Diethyl Phthalate		<MDL	120	241	ug/Kg		<MDL	170	333	ug/Kg		<MDL	140	273	ug/Kg
Dimethyl Phthalate	457		121	121	ug/Kg		<MDL	167	167	ug/Kg	205		137	137	ug/Kg
Di-N-Butyl Phthalate		<MDL	120	241	ug/Kg		<MDL	170	333	ug/Kg		<MDL	140	273	ug/Kg
Di-N-Octyl Phthalate		<MDL	121	121	ug/Kg	880		167	167	ug/Kg		<MDL	137	137	ug/Kg
Fluoranthene	4860		60	121	ug/Kg	3580		83	167	ug/Kg	2360		68	137	ug/Kg
Fluorene	344		60	121	ug/Kg	216		83	167	ug/Kg	174		68	137	ug/Kg
Hexachlorobenzene		<MDL	6	12.1	ug/Kg		<MDL	8.3	16.7	ug/Kg		<MDL	6.8	13.7	ug/Kg
Hexachlorobutadiene		<MDL	31	60.3	ug/Kg		<MDL	43	83.5	ug/Kg		<MDL	35	68.4	ug/Kg
Indeno(1,2,3-Cd)Pyrene	842		60	121	ug/Kg	697		83	167	ug/Kg	520		68	137	ug/Kg
Naphthalene	91	<RDL	60	121	ug/Kg		<MDL	83	167	ug/Kg		<MDL	68	137	ug/Kg
N-Nitrosodiphenylamine		<MDL	151	151	ug/Kg		<MDL	209	209	ug/Kg		<MDL	171	171	ug/Kg

King County Environmental Lab Analytical Report

Project:	423368-210-1	Project:	423368-210-1	Project:	423368-210-1
Locator:	CSO-BL-3	Locator:	CSO-BL-4	Locator:	CSO-BL-5
Descrip:	BALLARD CSO	Descrip:	BALLARD CSO	Descrip:	BALLARD CSO
Sample:	L64264-3	Sample:	L64264-4	Sample:	L64264-5
Matrix:	SE FRSHWTRSED	Matrix:	SE FRSHWTRSED	Matrix:	SE FRSHWTRSED
ColDate:	10/14/15 8:58	ColDate:	10/14/15 8:07	ColDate:	10/14/15 9:11
TotalSolid:	55.2	TotalSolid:	39.9	TotalSolid:	48.7
DRY Weight Basis		**DRY Weight Basis**		**DRY Weight Basis**	

Parameters	Value	Qual	MDL	RDL	Units	Value	Qual	MDL	RDL	Units	Value	Qual	MDL	RDL	Units
Pentachlorophenol		<MDL	906	906	ug/Kg		<MDL	1250	1250	ug/Kg		<MDL	1030	1030	ug/Kg
Phenanthrene	1900		60	121	ug/Kg	1770		83	167	ug/Kg	774		68	137	ug/Kg
Phenol		<MDL	310	906	ug/Kg		<MDL	430	1250	ug/Kg		<MDL	350	1030	ug/Kg
Pyrene	5820		60	121	ug/Kg	4240		83	167	ug/Kg	2730		68	137	ug/Kg
* Not converted to dry weight basis															

King County Environmental Lab Analytical Report

	Project:	423368-210-1					Project:	423368-210-1			
	Locator:	CSO-BL-6					Locator:	CSO-BL-7			
	Descrip:	BALLARD CSO					Descrip:	BALLARD CSO			
	Sample:	L64264-6					Sample:	L64264-7			
	Matrix:	SE FRSHWTRSED					Matrix:	SE FRSHWTRSED			
	ColDate:	10/14/15 9:41					ColDate:	10/14/15 8:16			
	TotalSolid:	55.4					TotalSolid:	33.4			
	DRY Weight Basis						**DRY Weight Basis**				
Parameters	**Value**	**Qual**	**MDL**	**RDL**	**Units**		**Value**	**Qual**	**MDL**	**RDL**	**Units**
CV ASTM D422											
Fines*											
Gravel*											
Sand*											
Silt*											
Clay*											
p+0.00*											
p+1.00*											
p+10.0(equal/more than)*											
p+2.00*											
p+3.00*											
p+4.00*											
p+5.00*											
p+6.00*											
p+7.00*											
p+8.00*											
p+9.00*											
p-1.00*											
p-2.00(less than)*											
p-2.00*											
CV SM2540-G											
Total Solids*	55.4		0.005	0.01	%		33.4		0.005	0.01	%
CV SW846 9060 PSEP96											
Total Organic Carbon											
ES NONE											
Field Personnel*											
Sampcoordx1*											
Sampcoordy1*											
Sampling Method*											
Sediment Sampling Depth*											
Sediment Sampling Range*											
Sediment Type*											
MT SW846 3050B(MODSB)*SW846 6020A											
Antimony, Total, ICP-MS											
Arsenic, Total, ICP-MS											
Cadmium, Total, ICP-MS											
Chromium, Total, ICP-MS											
Copper, Total, ICP-MS											
Lead, Total, ICP-MS											
Nickel, Total, ICP-MS											
Silver, Total, ICP-MS											
Zinc, Total, ICP-MS											
MT SW846 7471B											
Mercury, Total, CVAA											

King County Environmental Lab Analytical Report

	Project:	423368-210-1					Project:	423368-210-1			
	Locator:	CSO-BL-6					Locator:	CSO-BL-7			
	Descrip:	BALLARD CSO					Descrip:	BALLARD CSO			
	Sample:	L64264-6					Sample:	L64264-7			
	Matrix:	SE FRSHWTRSED					Matrix:	SE FRSHWTRSED			
	ColDate:	10/14/15 9:41					ColDate:	10/14/15 8:16			
	TotalSolid:	55.4					TotalSolid:	33.4			
	DRY Weight Basis						**DRY Weight Basis**				
Parameters	**Value**	**Qual**	**MDL**	**RDL**	**Units**		**Value**	**Qual**	**MDL**	**RDL**	**Units**
OR SW846 3550B*SW846 8082A											
Aroclor 1016		<MDL	7.2	28.9	ug/Kg			<MDL	12	47.9	ug/Kg
Aroclor 1221		<MDL	22	28.9	ug/Kg			<MDL	36	47.9	ug/Kg
Aroclor 1232		<MDL	22	28.9	ug/Kg			<MDL	36	47.9	ug/Kg
Aroclor 1242	10	<RDL	7.2	28.9	ug/Kg			<MDL	12	47.9	ug/Kg
Aroclor 1248		<MDL	7.2	28.9	ug/Kg			<MDL	12	47.9	ug/Kg
Aroclor 1254	269	J	5.8	28.9	ug/Kg		75.4		9.6	47.9	ug/Kg
Aroclor 1260	77.4	J	7.2	28.9	ug/Kg		58.4		12	47.9	ug/Kg
Aroclor 1268		<MDL	7.2	28.9	ug/Kg			<MDL	12	47.9	ug/Kg
OR SW846 3550B*SW846 8270D											
1,2,4-Trichlorobenzene		<MDL	6	12	ug/Kg			<MDL	9.9	20	ug/Kg
1,2-Dichlorobenzene		<MDL	60.1	60.1	ug/Kg			<MDL	99.7	99.7	ug/Kg
1,4-Dichlorobenzene		<MDL	90.3	90.3	ug/Kg			<MDL	150	150	ug/Kg
1-Methylnaphthalene		<MDL	60	120	ug/Kg			<MDL	99	200	ug/Kg
2,4-Dimethylphenol		<MDL	60	120	ug/Kg			<MDL	99	200	ug/Kg
2-Methylnaphthalene		<MDL	60	120	ug/Kg			<MDL	99	200	ug/Kg
2-Methylphenol		<MDL	60	120	ug/Kg			<MDL	99	200	ug/Kg
3-,4-Methylphenol		<MDL	310	601	ug/Kg			<MDL	510	997	ug/Kg
Acenaphthene	94	<RDL	60	120	ug/Kg			<MDL	99	200	ug/Kg
Acenaphthylene	100	<RDL	60	120	ug/Kg			<MDL	99	200	ug/Kg
Anthracene	227		60	120	ug/Kg		180	<RDL	99	200	ug/Kg
Benzo(a)anthracene	881		60	120	ug/Kg		1080		99	200	ug/Kg
Benzo(a)pyrene	1250		60	120	ug/Kg		1430		99	200	ug/Kg
Benzo(b,j,k)fluoranthene	2820		60	120	ug/Kg		3740		99	200	ug/Kg
Benzo(g,h,i)perylene	426		60	120	ug/Kg		497		99	200	ug/Kg
Benzoic Acid		<MDL	1200	1200	ug/Kg			<MDL	2000	2000	ug/Kg
Benzyl Alcohol		<MDL	150	150	ug/Kg			<MDL	249	249	ug/Kg
Benzyl Butyl Phthalate	131		90.3	90.3	ug/Kg		362		150	150	ug/Kg
Bis(2-Ethylhexyl)Phthalate	3340		120	240	ug/Kg		16600		200	398	ug/Kg
Carbazole	88	<RDL	60	120	ug/Kg		180	<RDL	99	200	ug/Kg
Chrysene	1370		60	120	ug/Kg		1730		99	200	ug/Kg
Dibenzo(a,h)anthracene	120	<RDL	60	120	ug/Kg		130	<RDL	99	200	ug/Kg
Dibenzofuran		<MDL	60	120	ug/Kg			<MDL	99	200	ug/Kg
Diethyl Phthalate		<MDL	120	240	ug/Kg			<MDL	200	398	ug/Kg
Dimethyl Phthalate	150		120	120	ug/Kg			<MDL	200	200	ug/Kg
Di-N-Butyl Phthalate		<MDL	120	240	ug/Kg		240	<RDL	200	398	ug/Kg
Di-N-Octyl Phthalate		<MDL	120	120	ug/Kg			<MDL	200	200	ug/Kg
Fluoranthene	2240		60	120	ug/Kg		2960		99	200	ug/Kg
Fluorene	150		60	120	ug/Kg		140	<RDL	99	200	ug/Kg
Hexachlorobenzene		<MDL	6	12	ug/Kg			<MDL	9.9	20	ug/Kg
Hexachlorobutadiene		<MDL	31	60.1	ug/Kg			<MDL	51	99.7	ug/Kg
Indeno(1,2,3-Cd)Pyrene	523		60	120	ug/Kg		620		99	200	ug/Kg
Naphthalene	99	<RDL	60	120	ug/Kg			<MDL	99	200	ug/Kg
N-Nitrosodiphenylamine		<MDL	150	150	ug/Kg			<MDL	249	249	ug/Kg

King County Environmental Lab Analytical Report

	Project:	423368-210-1					Project:	423368-210-1			
	Locator:	CSO-BL-6					Locator:	CSO-BL-7			
	Descrip:	BALLARD CSO					Descrip:	BALLARD CSO			
	Sample:	L64264-6					Sample:	L64264-7			
	Matrix:	SE FRSHWTRSED					Matrix:	SE FRSHWTRSED			
	ColDate:	10/14/15 9:41					ColDate:	10/14/15 8:16			
	TotalSolid:	55.4					TotalSolid:	33.4			
	DRY Weight Basis						**DRY Weight Basis**				
Parameters	**Value**	**Qual**	**MDL**	**RDL**	**Units**		**Value**	**Qual**	**MDL**	**RDL**	**Units**
Pentachlorophenol		<MDL	903	903	ug/Kg			<MDL	1500	1500	ug/Kg
Phenanthrene	596		60	120	ug/Kg		1060		99	200	ug/Kg
Phenol		<MDL	310	903	ug/Kg			<MDL	510	1500	ug/Kg
Pyrene	2760		60	120	ug/Kg		3530		99	200	ug/Kg

* Not converted to dry weight basis

King County Environmental Lab Analytical MATRIX Report

Owner: SEEDPAK
Matrix Class: SOLID/TISSUE
User select: DRY Weight Basis

LOCATOR	PROJECT	SAMPLE	COLLECTED	*Clay	*Fines	*Gravel	*Sand	*Silt	*p+0.00	*p+1.00	*p+10.0(equal/more than)	*p+2.00	*p+3.00	*p+4.00	*p+5.00	*p+6.00	*p+7.00	*p+8.00	*p+9.00	*p-1.00	*p-2.00	*p-2.00(less than)	*Total Solids	Total Organic Carbon	*Sampcoordx1
				%	%	%	%	%	%	%	%	%	%	%	%	%	%	%	%	%	%	%	%	mg/Kg	ft
CSO-BL-1	423368-210-1	L63934-1	10/14/2015 7:54	2.9	77.8		12.8	74.9		0.9		1.3	2.5	8.1	43.2	5.8	17.3	8.6	2.9				17.9	106000	1258672
CSO-BL-1	423368-210-1	L64264-1	10/14/2015 7:54	-	-	-	-	-	-	-	-	-	-	-	-	-	-	-	-	-	-	-	40.9	-	-
CSO-BL-2	423368-210-1	L63934-2	10/14/2015 8:30	5	71.8		21.6	66.9	0.6	2.1	2.5	1.5	4.5	12.9	29.7	9.9	17.3	9.9	2.5				22	48200	1258469
CSO-BL-2	423368-210-1	L64264-2	10/14/2015 8:30	-	-	-	-	-	-	-	-	-	-	-	-	-	-	-	-	-	-	-	44.2	-	-
CSO-BL-3	423368-210-1	L63934-3	10/14/2015 8:58	3.5	55.2	0.4	40.8	51.8	0.7	3.1	3.5	10.2	14.8	11.9	24.2	6.9	13.8	6.9		0.4			29.3	49500	1258544
CSO-BL-3	423368-210-1	L64264-3	10/14/2015 8:58	-	-	-	-	-	-	-	-	-	-	-	-	-	-	-	-	-	-	-	55.2	-	-
CSO-BL-4	423368-210-1	L63934-4	10/14/2015 8:07		11.2	10.2	69	11.2	4.8	4.8		22.8	29.5	7.1	7.5	1.9		1.9		3.1	0.4	6.7	29.8	117000	1258596
CSO-BL-4	423368-210-1	L64264-4	10/14/2015 8:07	-	-	-	-	-	-	-	-	-	-	-	-	-	-	-	-	-	-	-	39.9	-	-
CSO-BL-5	423368-210-1	L63934-5	10/14/2015 9:11	8.6	80		12.9	71.4		0.6	2.9	1.3	4.1	6.9	34.3	11.4	14.3	11.4	5.7				18	69400	1258680
CSO-BL-5	423368-210-1	L64264-5	10/14/2015 9:11	-	-	-	-	-	-	-	-	-	-	-	-	-	-	-	-	-	-	-	48.7	-	-
CSO-BL-6	423368-210-1	L63934-6	10/14/2015 9:41	4.7	51.6		43.6	46.9		0.5	1.6	6.5	25.7	10.8	23.4	7.8	7.8	7.8	3.1				31.8	45000	1258623
CSO-BL-6	423368-210-1	L64264-6	10/14/2015 9:41	-	-	-	-	-	-	-	-	-	-	-	-	-	-	-	-	-	-	-	55.4	-	-
CSO-BL-7	423368-210-1	L63934-7	10/14/2015 8:16		74.7	2.6	22.5	74.7	2	2.4		3	6.7	8.4	30.5	17	13.6	13.6		1.1		1.6	17.8	127000	1258516
CSO-BL-7	423368-210-1	L64264-7	10/14/2015 8:16	-	-	-	-	-	-	-	-	-	-	-	-	-	-	-	-	-	-	-	33.4	-	-

* Not converted to dry weight basis

If a parameter/analyte appears twice in the column header, it implies that they were analyzed by two different method codes

King County Environmental Lab Analytical MATRIX Report

Owner: SEEDPAK
Matrix Class: SOLID/TISSUE
User select: DRY Weight Basis

LOCATOR	PROJECT	SAMPLE	COLLECTED	*Sampcoordy1	*Sampling Method	*Sediment Sampling Depth	*Sediment Sampling Range	Antimony, Total, ICP-MS	Arsenic, Total, ICP-MS	Cadmium, Total, ICP-MS	Chromium, Total, ICP-MS	Copper, Total, ICP-MS	Lead, Total, ICP-MS	Nickel, Total, ICP-MS	Silver, Total, ICP-MS	Zinc, Total, ICP-MS	Mercury, Total, CVAA	Aroclor 1242	Aroclor 1254	Aroclor 1260
				ft	none	cm	cm	mg/Kg	mg/Kg	mg/Kg	mg/Kg	mg/Kg	mg/Kg	mg/Kg	mg/Kg	mg/Kg	mg/Kg	ug/Kg	ug/Kg	ug/Kg
CSO-BL-1	423368-210-1	L63934-1	10/14/2015 7:54	245923	20132	17	10	10	18.9	3.25	69.3	480	325	49.7	1.09	978	1.44	-	-	-
CSO-BL-1	423368-210-1	L64264-1	10/14/2015 7:54	-	-	-	-	-	-	-	-	-	-	-	-	-	-	14	122	66.5
CSO-BL-2	423368-210-1	L63934-2	10/14/2015 8:30	245999	20132	15	10	4.29	21.1	1.09	53.6	404	144	45.9	0.755	568	0.541	-	-	-
CSO-BL-2	423368-210-1	L64264-2	10/14/2015 8:30	-	-	-	-	-	-	-	-	-	-	-	-	-	-		92.5	43.9
CSO-BL-3	423368-210-1	L63934-3	10/14/2015 8:58	245927	20132	17	10	5.22	20.2	1.39	63.5	478	272	52.6	0.802	491	0.618	-	-	-
CSO-BL-3	423368-210-1	L64264-3	10/14/2015 8:58	-	-	-	-	-	-	-	-	-	-	-	-	-	-	14	112	49.6
CSO-BL-4	423368-210-1	L63934-4	10/14/2015 8:07	245871	20132	17	10	3.56	6.41	0.815	21.8	116	102	18.5	0.186	466	0.16	-	-	-
CSO-BL-4	423368-210-1	L64264-4	10/14/2015 8:07	-	-	-	-	-	-	-	-	-	-	-	-	-	-		51.9	25
CSO-BL-5	423368-210-1	L63934-5	10/14/2015 9:11	245787	20132	17	10	6.17	24.9	1.91	63.9	494	231	49.7	0.933	722	0.628	-	-	-
CSO-BL-5	423368-210-1	L64264-5	10/14/2015 9:11	-	-	-	-	-	-	-	-	-	-	-	-	-	-		98.2	56.9
CSO-BL-6	423368-210-1	L63934-6	10/14/2015 9:41	245571	20132	15	10	8.3	22.2	1.06	55.3	288	160	43.4	0.871	390	0.673	-	-	-
CSO-BL-6	423368-210-1	L64264-6	10/14/2015 9:41	-	-	-	-	-	-	-	-	-	-	-	-	-	-	10	269	77.4
CSO-BL-7	423368-210-1	L63934-7	10/14/2015 8:16	245795	20132	17	10	6.74	17.2	1.58	48.8	296	173	37.1	0.674	792	0.412	-	-	-
CSO-BL-7	423368-210-1	L64264-7	10/14/2015 8:16	-	-	-	-	-	-	-	-	-	-	-	-	-	-		75.4	58.4
* Not converted to dry weight basis																				
If a parameter/analyte appears twice in the column header, it imp																				

King County Environmental Lab Analytical MATRIX Report

Owner: SEEDPAK
Matrix Class: SOLID/TISSUE
User select: DRY Weight Basis

LOCATOR	PROJECT	SAMPLE	COLLECTED	Aroclor 1268	Acenaphthene	Acenaphthylene	Anthracene	Benzo(a)anthracene	Benzo(a)pyrene	Benzo(b,j,k)fluoranthene	Benzo(g,h,i)perylene	Benzyl Butyl Phthalate	Bis(2-Ethylhexyl)Phthalate	Carbazole	Chrysene	Di-N-Butyl Phthalate	Di-N-Octyl Phthalate	Dibenzo(a,h)anthracene	Dibenzofuran	Dimethyl Phthalate
				ug/Kg	ug/Kg	ug/Kg	ug/Kg	ug/Kg	ug/Kg	ug/Kg	ug/Kg	ug/Kg	ug/Kg	ug/Kg	ug/Kg	ug/Kg	ug/Kg	ug/Kg	ug/Kg	ug/Kg
CSO-BL-1	423368-210-1	L63934-1	10/14/2015 7:54	-	-	-	-	-	-	-	-	-	-	-	-	-	-	-	-	-
CSO-BL-1	423368-210-1	L64264-1	10/14/2015 7:54	20	100	83	208	1350	1990	5840	733	653	25700	169	2370	170	883	207		274
CSO-BL-2	423368-210-1	L63934-2	10/14/2015 8:30	-	-	-	-	-	-	-	-	-	-	-	-	-	-	-	-	-
CSO-BL-2	423368-210-1	L64264-2	10/14/2015 8:30				178	751	889	2100	342		4320		1120			88		187
CSO-BL-3	423368-210-1	L63934-3	10/14/2015 8:58	-	-	-	-	-	-	-	-	-	-	-	-	-	-	-	-	-
CSO-BL-3	423368-210-1	L64264-3	10/14/2015 8:58		201	100	388	1540	2050	4730	587	313	5310	166	2430			181	72	457
CSO-BL-4	423368-210-1	L63934-4	10/14/2015 8:07	-	-	-	-	-	-	-	-	-	-	-	-	-	-	-	-	-
CSO-BL-4	423368-210-1	L64264-4	10/14/2015 8:07		95		444	1510	1850	4460	459	326	12400	296	2660		880	160		
CSO-BL-5	423368-210-1	L63934-5	10/14/2015 9:11	-	-	-	-	-	-	-	-	-	-	-	-	-	-	-	-	-
CSO-BL-5	423368-210-1	L64264-5	10/14/2015 9:11		120		205	877	1110	2980	419	209	7370	84	1340			110		205
CSO-BL-6	423368-210-1	L63934-6	10/14/2015 9:41	-	-	-	-	-	-	-	-	-	-	-	-	-	-	-	-	-
CSO-BL-6	423368-210-1	L64264-6	10/14/2015 9:41		94	100	227	881	1250	2820	426	131	3340	88	1370			120		150
CSO-BL-7	423368-210-1	L63934-7	10/14/2015 8:16	-	-	-	-	-	-	-	-	-	-	-	-	-	-	-	-	-
CSO-BL-7	423368-210-1	L64264-7	10/14/2015 8:16				180	1080	1430	3740	497	362	16600	180	1730	240		130		
* Not converted to dry weight basis																				
If a parameter/analyte appears twice in the column header, it imp																				

King County Environmental Lab Analytical MATRIX Report

Owner: SEEDPAK
Matrix Class: SOLID/TISSUE
User select: DRY Weight Basis

LOCATOR	PROJECT	SAMPLE	COLLECTED	Fluoranthene ug/Kg	Fluorene ug/Kg	Indeno(1,2,3-Cd)Pyrene ug/Kg	N-Nitrosodiphenylamine ug/Kg	Naphthalene ug/Kg	Phenanthrene ug/Kg	Pyrene ug/Kg
CSO-BL-1	423368-210-1	L63934-1	10/14/2015 7:54	-	-	-	-	-	-	-
CSO-BL-1	423368-210-1	L64264-1	10/14/2015 7:54	3500	165	941			1040	4280
CSO-BL-2	423368-210-1	L63934-2	10/14/2015 8:30	-	-	-	-	-	-	-
CSO-BL-2	423368-210-1	L64264-2	10/14/2015 8:30	1880	120	439			550	2180
CSO-BL-3	423368-210-1	L63934-3	10/14/2015 8:58	-	-	-	-	-	-	-
CSO-BL-3	423368-210-1	L64264-3	10/14/2015 8:58	4860	344	842		91	1900	5820
CSO-BL-4	423368-210-1	L63934-4	10/14/2015 8:07	-	-	-	-	-	-	-
CSO-BL-4	423368-210-1	L64264-4	10/14/2015 8:07	3580	216	697			1770	4240
CSO-BL-5	423368-210-1	L63934-5	10/14/2015 9:11	-	-	-	-	-	-	-
CSO-BL-5	423368-210-1	L64264-5	10/14/2015 9:11	2360	174	520			774	2730
CSO-BL-6	423368-210-1	L63934-6	10/14/2015 9:41	-	-	-	-	-	-	-
CSO-BL-6	423368-210-1	L64264-6	10/14/2015 9:41	2240	150	523		99	596	2760
CSO-BL-7	423368-210-1	L63934-7	10/14/2015 8:16	-	-	-	-	-	-	-
CSO-BL-7	423368-210-1	L64264-7	10/14/2015 8:16	2960	140	620			1060	3530
* Not converted to dry weight basis										
If a parameter/analyte appears twice in the column header, it imp										

CHAIN OF CUSTODY FORMS

Login: P63934

2015 CSO Seds Fresh Water

Personnel: ______________

Project: 423368-210-1

CHAIN OF CUSTODY

Relinquished by	*Date* 10/14/15	*Time* 1015
Received by	*Date* 10-14-15	*Time* 1015
Sample Numbers 63934-1 → 7		*[All]*

Sample Number	**P63934-1**	**P63934-2**	**P63934-3**
QC Link			
Locator	**CSO-BL-1**	**CSO-BL-2**	**CSO-BL-3**
Short Loc Desc	CSO-BL-1	CSO-BL-2	CSO-BL-3
Locator Desc	BALLARD CSO	BALLARD CSO	BALLARD CSO
Site	FACILITIES	FACILITIES	FACILITIES
Comments			
Start Date/Time	10/14/15 0754	0830	0858
End Date/Time			
Time Span			
Sample Depth			
PERSONNEL	Bh, CB	→	→
SAMP METH	20132	→	→
SED DEPTH	17	15	17
SED SAMP RANGE	0-10	→	→
SED TYPE	2, 0, P, 1, ~~2~~ 7	3, 2, P, 1, 0	2, 3, P, 1, 2
~~TIDE COND~~			
~~TIDE HT~~			
Dept, Matrix, Prod	3 SE PSD 3 SE TOC 3 SE TOTS 6 SE AG-ICPMS 6 SE AS-ICPMS 6 SE CD-ICPMS 6 SE CR-ICPMS 6 SE CU-ICPMS 6 SE HG-CVAA-M 6 SE NI-ICPMS 6 SE PB-ICPMS 6 SE SB-ICPMS 6 SE ZN-ICPMS 7 SE BNASMS 7 SE PCB-DOE-FW	3 SE PSD 3 SE TOC 3 SE TOTS 6 SE AG-ICPMS 6 SE AS-ICPMS 6 SE CD-ICPMS 6 SE CR-ICPMS 6 SE CU-ICPMS 6 SE HG-CVAA-M 6 SE NI-ICPMS 6 SE PB-ICPMS 6 SE SB-ICPMS 6 SE ZN-ICPMS 7 SE BNASMS 7 SE PCB-DOE-FW	3 SE PSD 3 SE TOC 3 SE TOTS 6 SE AG-ICPMS 6 SE AS-ICPMS 6 SE CD-ICPMS 6 SE CR-ICPMS 6 SE CU-ICPMS 6 SE HG-CVAA-M 6 SE NI-ICPMS 6 SE PB-ICPMS 6 SE SB-ICPMS 6 SE ZN-ICPMS 7 SE BNASMS 7 SE PCB-DOE-FW

FS = WL142614
[illegible] = WL142616

Some oil sheen
Also H_2S + petroleum
Black + slimy

Significant Plant material
Sheen - significant bubbling up

~~[illegible]~~ sheen
Slightly brown
Took 6 casts
Locator under dock

Login: P63934 **2015 CSO Seds Fresh Water** **Personnel:** ______________

Project: 423368-210-1

Sample Number	**P63934-4**	**P63934-5**	**P63934-6**
QC Link			
Locator	**CSO-BL-4**	**CSO-BL-5**	**CSO-BL-6**
Short Loc Desc	CSO-BL-4	CSO-BL-5	CSO-BL-6
Locator Desc	BALLARD CSO	BALLARD CSO	BALLARD CSO
Site	FACILITIES	FACILITIES	FACILITIES
Comments			
Start Date/Time	10/14/15 0807	0911	0941
End Date/Time			
Time Span			
Sample Depth			
PERSONNEL	Lh. CB	→	→
SAMP METH	20132	→	→
SED DEPTH	17	17	15
SED SAMP RANGE	0-10	0-10	0-10
SED TYPE	3,2,P,1,7	3,2,P,1,2	3,2,P,1,2
~~TIDE COND~~			
~~TIDE HT~~			
Dept, Matrix, Prod	3 SE PSD 3 SE TOC 3 SE TOTS 6 SE AG-ICPMS 6 SE AS-ICPMS 6 SE CD-ICPMS 6 SE CR-ICPMS 6 SE CU-ICPMS 6 SE HG-CVAA-M 6 SE NI-ICPMS 6 SE PB-ICPMS 6 SE SB-ICPMS 6 SE ZN-ICPMS 7 SE BNASMS 7 SE PCB-DOE-FW	3 SE PSD 3 SE TOC 3 SE TOTS 6 SE AG-ICPMS 6 SE AS-ICPMS 6 SE CD-ICPMS 6 SE CR-ICPMS 6 SE CU-ICPMS 6 SE HG-CVAA-M 6 SE NI-ICPMS 6 SE PB-ICPMS 6 SE SB-ICPMS 6 SE ZN-ICPMS 7 SE BNASMS 7 SE PCB-DOE-FW	3 SE PSD 3 SE TOC 3 SE TOTS 6 SE AG-ICPMS 6 SE AS-ICPMS 6 SE CD-ICPMS 6 SE CR-ICPMS 6 SE CU-ICPMS 6 SE HG-CVAA-M 6 SE NI-ICPMS 6 SE PB-ICPMS 6 SE SB-ICPMS 6 SE ZN-ICPMS 7 SE BNASMS 7 SE PCB-DOE-FW
	Significant Plant material Sheen	Full !! Dry 3 feet from the Bisonnis' boat Sheen	☆ Changed Location SE of site Sheen

Login: P63934 2015 CSO Seds Fresh Water Personnel: _____

Project: 423368-210-1

Sample Number	**P63934-7**		
QC Link			
Locator	**CSO-BL-7**		
Short Loc Desc	CSO-BL-7		
Locator Desc	BALLARD CSO		
Site	FACILITIES		
Comments			
Start Date/Time	10/14/15 0816		
End Date/Time			
Time Span			
Sample Depth			
PERSONNEL	Bh CB		
SAMP METH	20172		
SED DEPTH	17		
SED SAMP RANGE	0-10		
SED TYPE	2,3,P,1,8		
~~TIDE COND~~			
~~TIDE HT~~			
Dept, Matrix, Prod	3 SE PSD 3 SE TOC 3 SE TOTS 6 SE AG-ICPMS 6 SE AS-ICPMS 6 SE CD-ICPMS 6 SE CR-ICPMS 6 SE CU-ICPMS 6 SE HG-CVAA-M 6 SE NI-ICPMS 6 SE PB-ICPMS 6 SE SB-ICPMS 6 SE ZN-ICPMS 7 SE BNASMS 7 SE PCB-DOE-FW		

Sheen

2 feet behind Boat

LABORATORY WORK ORDER
Chain of Custody

Project Name: Ballard Siphon CSO Sediments
Project Number: 423368-210-1
Laboratory Project Manager: Fritz Grothkopp/Bob Kruger
Telephone Number: 477 7114/7147

King County Department of Natural Resources
Water and Land Resources Division
Environmental Laboratory
322 West Ewing Street
Seattle, Washington 98119-1507

Note: Use only one Login No. per sheet. Sample Number	Client Locator	Collect Date		TOC/TOTS	PSD	Metals + HG-CVAA-M	BNASMS	PCB-DOE-FW							Number of Containers	Comments
L63934-1	CSO-BL-1			1	1	1	1	1							5	
L63934-2	CSO-BL-2			1	1	1	1	1							5	
L63934-3	CSO-BL-3			1	1	1	1	1							5	
L63934-4	CSO-BL-4			1	2	1	1	1							6	
L63934-5	CSO-BL-5			1	1	1	1	1							5	
L63934-6	CSO-BL-6			1	1	1	1	1							5	
L63934-7	CSO-BL-7															
L -																
L -																
L -																
L -																

Additional Comments:

Total Number of Containers 36

Sampled By: Bh CS

Relinquished By:
Signature [signature]
Date 10/14/15
Printed Name Bob Kruger
Time 1015
Organization King County Environmental Laboratory

Received By:
Signature [signature]
Date 10-14-15
Printed Name Jason Kinnard
Time 1015
Organization King County Environmental Laboratory

Login: P64264 | 2015 CSO Seds Fresh Water | Personnel: _____

Project: 423368-210-1

CHAIN OF CUSTODY

Relinquished by Frederick Hollopp	*Date* 11-19-15	*Time*
Received by	*Date*	*Time*
Sample Numbers		*[All]*

Sample Number	**P64264-1**	**P64264-2**	**P64264-3**
QC Link			
Locator	**CSO-BL-1**	**CSO-BL-2**	**CSO-BL-3**
Short Loc Desc	CSO-BL-1	CSO-BL-2	CSO-BL-3
Locator Desc	BALLARD CSO	BALLARD CSO	BALLARD CSO
Site	FACILITIES	FACILITIES	FACILITIES
Comments	L63934-1	L63934-2	L63934-3
Start Date/Time			
End Date/Time			
Time Span			
Sample Depth			
Dept, Matrix, Prod	3 SE TOTS 7 SE BNASMS 7 SE PCB-DOE-FW	3 SE TOTS 7 SE BNASMS 7 SE PCB-DOE-FW	3 SE TOTS 7 SE BNASMS 7 SE PCB-DOE-FW

Login: P64264 2015 CSO Seds Fresh Water Personnel: _____

Project: 423368-210-1

Sample Number	P64264-4	P64264-5	P64264-6
QC Link			
Locator	CSO-BL-4	CSO-BL-5	CSO-BL-6
Short Loc Desc	CSO-BL-4	CSO-BL-5	CSO-BL-6
Locator Desc	BALLARD CSO	BALLARD CSO	BALLARD CSO
Site	FACILITIES	FACILITIES	FACILITIES
Comments	L63934-4	L63934-5	L63934-6
Start Date/Time			
End Date/Time			
Time Span			
Sample Depth			
Dept, Matrix, Prod	3 SE TOTS 7 SE BNASMS 7 SE PCB-DOE-FW	3 SE TOTS 7 SE BNASMS 7 SE PCB-DOE-FW	3 SE TOTS 7 SE BNASMS 7 SE PCB-DOE-FW

Project: 423368-210-1

Sample Number	**P64264-7**		
QC Link			
Locator	**CSO-BL-7**		
Short Loc Desc	CSO-BL-7		
Locator Desc	BALLARD CSO		
Site	FACILITIES		
Comments	L63934-7		
Start Date/Time			
End Date/Time			
Time Span			
Sample Depth			
Dept, Matrix, Prod	3 SE TOTS 7 SE BNASMS 7 SE PCB-DOE-FW		

CONVENTIONAL ANALYSES QC DATA

Workgroup: WG142342 Total Solids

Sample	Project	Project Description	List Type	Matrix	Collect Date	Prep Date	Anal Date	QC Association	Comments
L63623-2	421520-500	RSMP Status and Trends -	CVTOTS	FRSHWTRSED	10/8/2015 11:00	10/14/2015 13:35	11/2/2015 6:18	WG142342-1,-2,-3,-4,-5,-6,-7	
L63623-3	421520-500	RSMP Status and Trends -	CVTOTS	FRSHWTRSED	10/8/2015 11:15	10/14/2015 13:35	11/2/2015 6:19		
L63828-2	421520-500	RSMP Status and Trends -	CVTOTS	FRSHWTRSED	10/8/2015 12:00	10/14/2015 13:35	11/2/2015 6:18		
L63828-3	421520-500	RSMP Status and Trends -	CVTOTS	FRSHWTRSED	10/8/2015 12:00	10/14/2015 13:35	11/2/2015 6:19		
L63860-1	421430-300	OCS-Lake Haven Utility Di	CVTOTS	SLUDGE	10/12/2015 10:00	10/14/2015 13:35	11/2/2015 6:21		
L63860-2	421430-300	OCS-Lake Haven Utility Di	CVTOTS	SLUDGE	10/12/2015 8:37	10/14/2015 13:35	11/2/2015 6:21		
L63922-1	421196-110	Roads Pitfill-Ditches	CVTOTS	SOIL	10/13/2015 12:30	10/14/2015 13:35	11/2/2015 6:23		
L63922-2	421196-110	Roads Pitfill-Ditches	CVTOTS	SOIL	10/13/2015 11:20	10/14/2015 13:35	11/2/2015 6:24		
L63922-7	421196-110	Roads Pitfill-Ditches	CVTOTS	SOIL	10/13/2015 11:30	10/14/2015 13:35	11/2/2015 6:24		
L63934-1	423368-210-1	CSO Sediment Quality Cha	CVTOTS	FRSHWTRSED	10/14/2015 7:54	10/14/2015 13:35	11/2/2015 6:25		
L63934-2	423368-210-1	CSO Sediment Quality Cha	CVTOTS	FRSHWTRSED	10/14/2015 8:30	10/14/2015 13:35	11/2/2015 6:25		
L63934-3	423368-210-1	CSO Sediment Quality Cha	CVTOTS	FRSHWTRSED	10/14/2015 8:58	10/14/2015 13:35	11/2/2015 6:26		
L63934-4	423368-210-1	CSO Sediment Quality Cha	CVTOTS	FRSHWTRSED	10/14/2015 8:07	10/14/2015 13:35	11/2/2015 6:26		
L63934-5	423368-210-1	CSO Sediment Quality Cha	CVTOTS	FRSHWTRSED	10/14/2015 9:11	10/14/2015 13:35	11/2/2015 6:27		
L63934-6	423368-210-1	CSO Sediment Quality Cha	CVTOTS	FRSHWTRSED	10/14/2015 9:41	10/14/2015 13:35	11/2/2015 6:28		
L63934-7	423368-210-1	CSO Sediment Quality Cha	CVTOTS	FRSHWTRSED	10/14/2015 8:16	10/14/2015 13:35	11/2/2015 6:30		
WG142342-1	MB		CVTOTS	OTHR SOLID		10/14/2015 13:35	11/2/2015 6:17		MB1 10/14/15
WG142342-2	LD		CVTOTS	FRSHWTRSED		10/14/2015 13:35	11/2/2015 6:20		L63828-3
WG142342-3	LT		CVTOTS	FRSHWTRSED		10/14/2015 13:35	11/2/2015 6:20		WG142342-2 L63828-3
WG142342-4	LD		CVTOTS	SLUDGE		10/14/2015 13:35	11/2/2015 6:22		L63860-2
WG142342-5	LD		CVTOTS	SOIL		10/14/2015 13:35	11/2/2015 6:23		L63922-1
WG142342-6	LD		CVTOTS	FRSHWTRSED		10/14/2015 13:35	11/2/2015 6:28		L63934-6
WG142342-7	LT		CVTOTS	FRSHWTRSED		10/14/2015 13:35	11/2/2015 6:29		WG142342-6 L63934-6

Workgroup: WG142342 Total Solids

MB:WG142342-1 Matrix: OTHR SOLID Listtype:CVTOTS Method:SM2540-G Project: Pkey:STD
(Method Blank)

Parameter	MDL	RDL	Units	MB Value	Qual
Total Solids	0.005	0.01	%	<MDL	

LT:WG142342-3 LD:WG142342-2 L63828-3 Matrix: FRSHWTRSED Listtype:CVTOTS Method:SM2540-G Project:421520-500 Pkey:SED
(Lab Triplicate, Lab Duplicate)

Parameter	MDL	RDL	Units	SAMP Value	LD Value	LT Value	RSD	Qual	Lab Limit
Total Solids	0.005	0.01	%	65.5	60.7	65.2	4		0--20

LD:WG142342-4 L63860-2 Matrix: SLUDGE Listtype:CVTOTS Method:SM2540-G Project:421430-300 Pkey:STD
(Lab Duplicate)

Parameter	MDL	RDL	Units	SAMP Value	LD Value	RPD	Qual	Lab Limit
Total Solids	0.005	0.01	%	18.1	18.1	0		0--20

LD:WG142342-5 L63922-1 Matrix: SOIL Listtype:CVTOTS Method:SM2540-G Project:421196-110 Pkey:STD
(Lab Duplicate)

Parameter	MDL	RDL	Units	SAMP Value	LD Value	RPD	Qual	Lab Limit
Total Solids	0.005	0.01	%	82.1	84.9	3		0--20

LT:WG142342-7 LD:WG142342-6 L63934-6 Matrix: FRSHWTRSED Listtype:CVTOTS Method:SM2540-G Project:423368-210-1 Pkey:SED
(Lab Triplicate, Lab Duplicate)

Parameter	MDL	RDL	Units	SAMP Value	LD Value	LT Value	RSD	Qual	Lab Limit
Total Solids	0.005	0.01	%	31.8	32	32.3	1		0--20

Workgroup: WG142623 Total Organic Carbon

Sample	Project	Project Description	List Type	Matrix	Collect Date	Prep Date	Anal Date	QC Association	Comments
L63922-1	421196-110	Roads Pitfill-Ditches	CVTOC	SOIL	10/13/2015 12:30	10/26/2015 15:25	11/3/2015 12:05	WG142623-1,-2,-3,-4,-5,-6,-7,-8,-9,-10,-11,-12,-13	
L63922-2	421196-110	Roads Pitfill-Ditches	CVTOC	SOIL	10/13/2015 11:20	10/26/2015 15:25	11/3/2015 10:20		
L63922-4	421196-110	Roads Pitfill-Ditches	CVTOC	SOIL	10/14/2015 14:30	10/26/2015 15:25	11/3/2015 12:34		
L63922-5	421196-110	Roads Pitfill-Ditches	CVTOC	SOIL	10/14/2015 10:15	10/26/2015 15:25	11/3/2015 13:32		
L63922-7	421196-110	Roads Pitfill-Ditches	CVTOC	SOIL	10/13/2015 11:30	10/26/2015 15:25	11/3/2015 13:59		
L63934-1	423368-210-1	CSO Sediment Quality Cha	CVTOC	FRSHWTRSED	10/14/2015 7:54	10/26/2015 15:25	11/3/2015 14:29		
L63934-2	423368-210-1	CSO Sediment Quality Cha	CVTOC	FRSHWTRSED	10/14/2015 8:30	10/26/2015 15:25	11/4/2015 12:36		
L63934-3	423368-210-1	CSO Sediment Quality Cha	CVTOC	FRSHWTRSED	10/14/2015 8:58	10/26/2015 15:25	11/4/2015 13:02		
L63934-4	423368-210-1	CSO Sediment Quality Cha	CVTOC	FRSHWTRSED	10/14/2015 8:07	10/26/2015 15:25	11/4/2015 13:56		
L63934-5	423368-210-1	CSO Sediment Quality Cha	CVTOC	FRSHWTRSED	10/14/2015 9:11	10/26/2015 15:25	11/4/2015 10:34		
L63934-6	423368-210-1	CSO Sediment Quality Cha	CVTOC	FRSHWTRSED	10/14/2015 9:41	10/26/2015 15:25	11/4/2015 14:21		
L63934-7	423368-210-1	CSO Sediment Quality Cha	CVTOC	FRSHWTRSED	10/14/2015 8:16	10/26/2015 15:25	11/4/2015 14:46		
WG142623-1	MB		CVTOC	OTHR SOLID		10/26/2015 15:25	11/2/2015 14:30		MB1 151102
WG142623-2	MB		CVTOC	OTHR SOLID		10/26/2015 15:25	11/3/2015 8:52		MB2 151103
WG142623-3	LCS		CVTOC	OTHR SOLID		10/26/2015 15:25	11/3/2015 9:18		LEVEL1
WG142623-4	SB		CVTOC	OTHR SOLID		10/26/2015 15:25	11/3/2015 9:43		WG142623-2
WG142623-5	LD		CVTOC	SOIL		10/26/2015 15:25	11/3/2015 10:44		L63922-2
WG142623-6	LT		CVTOC	SOIL		10/26/2015 15:25	11/3/2015 11:08		WG142623-5 L63922-2
WG142623-7	MS		CVTOC	SOIL		10/26/2015 15:25	11/3/2015 11:40		L63922-2
WG142623-8	MB		CVTOC	OTHR SOLID		10/26/2015 15:25	11/4/2015 8:56		MB3 151104
WG142623-9	LCS		CVTOC	OTHR SOLID		10/26/2015 15:25	11/4/2015 9:33		LEVEL1
WG142623-10	SB		CVTOC	OTHR SOLID		10/26/2015 15:25	11/4/2015 10:06		WG142623-8
WG142623-11	LD		CVTOC	FRSHWTRSED		10/26/2015 15:25	11/4/2015 10:59		L63934-5
WG142623-12	LT		CVTOC	FRSHWTRSED		10/26/2015 15:25	11/4/2015 11:33		WG142623-11 L63934-5
WG142623-13	MS		CVTOC	FRSHWTRSED		10/26/2015 15:25	11/4/2015 12:11		L63934-5

Workgroup: WG142623 Total Organic Carbon

MB:WG142623-1 Matrix: OTHR SOLID Listtype:CVTOC Method:SW846 9060 PSEP96 Project: Pkey:STD
(Method Blank)

Parameter	MDL	RDL	Units	MB Value	Qual
Total Organic Carbon	500	1000	mg/Kg	<MDL	

MB:WG142623-2 Matrix: OTHR SOLID Listtype:CVTOC Method:SW846 9060 PSEP96 Project: Pkey:STD
(Method Blank)

Parameter	MDL	RDL	Units	MB Value	Qual
Total Organic Carbon	500	1000	mg/Kg	<MDL	

LCS:WG142623-3 Matrix: OTHR SOLID Listtype:CVTOC Method:SW846 9060 PSEP96 Project: Pkey:STD
(Lab Control Sample)

Parameter	MDL	RDL	Units	True Value	LCS Value	% Rec.	Qual	Lab Limit
Total Organic Carbon	3100	6150	mg/Kg	33510	33100	99		80--120

SB:WG142623-4 MB:WG142623-2 Matrix: OTHR SOLID Listtype:CVTOC Method:SW846 9060 PSEP96 Project: Pkey:STD
(Spike Blank, Method Blank)

Parameter	MDL	RDL	Units	MB Value	True Value	SB Value	% Rec.	Qual	Lab Limit
Total Organic Carbon	500	1000	mg/Kg	<MDL	3750	3900	104		80--120

LT:WG142623-6 LD:WG142623-5 L63922-2 Matrix: SOIL Listtype:CVTOC Method:SW846 9060 PSEP96 Project:421196-110 Pkey:STD
(Lab Triplicate, Lab Duplicate)

Parameter	MDL	RDL	Units	SAMP Value	LD Value	LT Value	RSD	Qual	Lab Limit
Total Organic Carbon	4800	9550	mg/Kg	23500	25000	22900	5		0--20

MS:WG142623-7 L63922-2 Matrix: SOIL Listtype:CVTOC Method:SW846 9060 PSEP96 Project:421196-110 Pkey:STD
(Matrix Spike)

Parameter	MDL	RDL	Units	SAMP Value	True Value	MS Value	% Rec.	Qual	Lab Limit
Total Organic Carbon	4700	9370	mg/Kg	23500	35800	57800	96		75--125

MB:WG142623-8 Matrix: OTHR SOLID Listtype:CVTOC Method:SW846 9060 PSEP96 Project: Pkey:STD
(Method Blank)

Parameter	MDL	RDL	Units	MB Value	Qual
Total Organic Carbon	500	1000	mg/Kg	<MDL	

LCS:WG142623-9 Matrix: OTHR SOLID Listtype:CVTOC Method:SW846 9060 PSEP96 Project: Pkey:STD
(Lab Control Sample)

Parameter	MDL	RDL	Units	True Value	LCS Value	% Rec.	Qual	Lab Limit
Total Organic Carbon	3300	6590	mg/Kg	33510	33800	101		80--120

SB:WG142623-10 MB:WG142623-8 Matrix: OTHR SOLID Listtype:CVTOC Method:SW846 9060 PSEP96 Project: Pkey:STD
(Spike Blank, Method Blank)

Parameter	MDL	RDL	Units	MB Value	True Value	SB Value	% Rec.	Qual	Lab Limit
Total Organic Carbon	500	1000	mg/Kg	<MDL	3750	3900	104		80--120

LT:WG142623-12 LD:WG142623-11 L63934-5 Matrix: FRSHWTRSED Listtype:CVTOC Method:SW846 9060 PSEP96 Project:423368-210-1 Pkey:SED
(Lab Triplicate, Lab Duplicate)

Parameter	MDL	RDL	Units	SAMP Value	LD Value	LT Value	RSD	Qual	Lab Limit
Total Organic Carbon	2900	5880	mg/Kg	12500	12400	12400	0		0--20

MS:WG142623-13 L63934-5 Matrix: FRSHWTRSED Listtype:CVTOC Method:SW846 9060 PSEP96 Project:423368-210-1 Pkey:SED
(Matrix Spike)

Parameter	MDL	RDL	Units	SAMP Value	True Value	MS Value	% Rec.	Qual	Lab Limit
Total Organic Carbon	3100	6180	mg/Kg	12500	21200	34700	105		75--125

Workgroup: WG143687 PSD

Sample	Project	Project Description	List Type	Matrix	Collect Date	Prep Date	Anal Date	QC Association	Comments
L63934-1	423368-210-1	CSO Sediment Quality Cha	CVPSD	FRSHWTRSED	10/14/2015 7:54	12/21/2015 17:20	12/22/2015 11:20	WG143687-1,-2	
L63934-2	423368-210-1	CSO Sediment Quality Cha	CVPSD	FRSHWTRSED	10/14/2015 8:30	12/21/2015 17:20	12/22/2015 11:20		
L63934-3	423368-210-1	CSO Sediment Quality Cha	CVPSD	FRSHWTRSED	10/14/2015 8:58	12/21/2015 17:20	12/22/2015 11:20		
L63934-4	423368-210-1	CSO Sediment Quality Cha	CVPSD	FRSHWTRSED	10/14/2015 8:07	12/21/2015 17:20	12/22/2015 11:20		
L63934-5	423368-210-1	CSO Sediment Quality Cha	CVPSD	FRSHWTRSED	10/14/2015 9:11	12/21/2015 17:20	12/22/2015 11:20		
L63934-6	423368-210-1	CSO Sediment Quality Cha	CVPSD	FRSHWTRSED	10/14/2015 9:41	12/21/2015 17:20	12/22/2015 11:20		
L63934-7	423368-210-1	CSO Sediment Quality Cha	CVPSD	FRSHWTRSED	10/14/2015 8:16	12/21/2015 17:20	12/22/2015 11:20		
WG143687-1	LD		CVPSD	FRSHWTRSED		12/21/2015 17:20	12/22/2015 11:20		L63934-7
WG143687-2	LT		CVPSD	FRSHWTRSED		12/21/2015 17:20	12/22/2015 11:20		WG143687-1 L63934-7

Workgroup: WG143687 PSD

LT:WG143687-2 LD:WG143687-1 L63934-7 Matrix: FRSHWTRSED Listtype:CVPSD Method:ASTM D422 Project:423368-210-1 Pkey:SED
(Lab Triplicate, Lab Duplicate)

Parameter	MDL	RDL	Units	SAMP Value	LD Value	LT Value	RSD	Qual	Lab Limit
Gravel	0.7	7.4	%	2.6	1.4	2.7			0–20
Sand	0.7	7.4	%	22.5	23.1	21.5	4		0–20
Silt	3.7	7.4	%	74.7	73.9	68.6	5		0–20
Clay	3.7	7.39	%	<MDL	<MDL	<MDL			0–20

Workgroup: WG143076 Total Solids

Sample	Project	Project Description	List Type	Matrix	Collect Date	Prep Date	Anal Date	QC Association	Comments
L64264-1	423368-210-1	CSO Sediment Quality Cha	CVTOTS	FRSHWTRSED	10/14/2015 7:54	11/19/2015 17:00	11/20/2015 6:00	WG143076-1,-2,-3	
L64264-2	423368-210-1	CSO Sediment Quality Cha	CVTOTS	FRSHWTRSED	10/14/2015 8:30	11/19/2015 17:00	11/20/2015 6:01		
L64264-3	423368-210-1	CSO Sediment Quality Cha	CVTOTS	FRSHWTRSED	10/14/2015 8:58	11/19/2015 17:00	11/20/2015 6:01		
L64264-4	423368-210-1	CSO Sediment Quality Cha	CVTOTS	FRSHWTRSED	10/14/2015 8:07	11/19/2015 17:00	11/20/2015 6:03		
L64264-5	423368-210-1	CSO Sediment Quality Cha	CVTOTS	FRSHWTRSED	10/14/2015 9:11	11/19/2015 17:00	11/20/2015 6:03		
L64264-6	423368-210-1	CSO Sediment Quality Cha	CVTOTS	FRSHWTRSED	10/14/2015 9:41	11/19/2015 17:00	11/20/2015 6:04		
L64264-7	423368-210-1	CSO Sediment Quality Cha	CVTOTS	FRSHWTRSED	10/14/2015 8:16	11/19/2015 17:00	11/20/2015 6:07		
WG143076-1	MB		CVTOTS	OTHR SOLID		11/19/2015 17:00	11/20/2015 6:00		MB1 151119
WG143076-2	LD		CVTOTS	FRSHWTRSED		11/19/2015 17:00	11/20/2015 6:02		L64264-3
WG143076-3	LT		CVTOTS	FRSHWTRSED		11/19/2015 17:00	11/20/2015 6:02		WG143076-2 L64264-3

Workgroup: WG143076 Total Solids

MB:WG143076-1 Matrix: OTHR SOLID Listtype:CVTOTS Method:SM2540-G Project: Pkey:STD
(Method Blank)

Parameter	MDL	RDL	Units	MB Value	Qual
Total Solids	0.005	0.01	%	<MDL	

LT:WG143076-3 LD:WG143076-2 L64264-3 Matrix: FRSHWTRSED Listtype:CVTOTS Method:SM2540-G Project:423368-210-1 Pkey:SED
(Lab Triplicate, Lab Duplicate)

Parameter	MDL	RDL	Units	SAMP Value	LD Value	LT Value	RSD	Qual	Lab Limit
Total Solids	0.005	0.01	%	55.2	55.6	55.5	0		0–20

METAL CHEMISTRY QC DATA

Workgroup: WG142384 Mercury, Total, CVAA

Sample	Project	Project Description	List Type	Matrix	Collect Date	Prep Date	Anal Date	QC Association	Comments
L63934-1	423368-210-1	CSO Sediment Quality Cha	MTHG-MIDS	FRSHWTRSED	10/14/2015 7:54	10/16/2015 11:00	10/19/2015 13:04	WG142384-1,-2,-3,-4,-5,-6,-7	
L63934-2	423368-210-1	CSO Sediment Quality Cha	MTHG-MIDS	FRSHWTRSED	10/14/2015 8:30	10/16/2015 11:00	10/19/2015 13:06		
L63934-3	423368-210-1	CSO Sediment Quality Cha	MTHG-MIDS	FRSHWTRSED	10/14/2015 8:58	10/16/2015 11:00	10/19/2015 13:08		
L63934-4	423368-210-1	CSO Sediment Quality Cha	MTHG-MIDS	FRSHWTRSED	10/14/2015 8:07	10/16/2015 11:00	10/19/2015 13:10		
L63934-5	423368-210-1	CSO Sediment Quality Cha	MTHG-MIDS	FRSHWTRSED	10/14/2015 9:11	10/16/2015 11:00	10/19/2015 13:12		
L63934-6	423368-210-1	CSO Sediment Quality Cha	MTHG-MIDS	FRSHWTRSED	10/14/2015 9:41	10/16/2015 11:00	10/19/2015 13:24		
L63934-7	423368-210-1	CSO Sediment Quality Cha	MTHG-MIDS	FRSHWTRSED	10/14/2015 8:16	10/16/2015 11:00	10/19/2015 13:26		
WG142384-1	MB		MTHG-MIDS	SOLIDBLANK		10/16/2015 11:00	10/19/2015 13:00		MB
WG142384-2	SB		MTHG-MIDS	SOLIDBLANK		10/16/2015 11:00	10/19/2015 13:02		WG142384-1 HG-SMID
WG142384-3	LD		MTHG-MIDS	FRSHWTRSED		10/16/2015 11:00	10/19/2015 13:14		L63934-5 RPD-SOL
WG142384-4	MS		MTHG-MIDS	FRSHWTRSED		10/16/2015 11:00	10/19/2015 13:16		L63934-5 HG-SMID
WG142384-5	MSD		MTHG-MIDS	FRSHWTRSED		10/16/2015 11:00	10/19/2015 13:18		WG142384-4 L63934-5 HG-SMID-MSD
WG142384-6	LCS		MTHG-MIDS	FRSHWTRSED		10/16/2015 11:00	10/19/2015 13:27		ERASOIL
WG142384-7	LCSD		MTHG-MIDS	FRSHWTRSED		10/16/2015 11:00	10/19/2015 13:29		WG142384-6 ERASOIL

Workgroup: WG142384 Mercury, Total, CVAA

MB:WG142384-1 Matrix: SOLIDBLANK Listtype:MTHG-MIDS Method:SW846 7471B Project: Pkey:STD
(Method Blank)

Parameter	MDL	RDL	Units	MB Value	Qual
Mercury, Total, CVAA	0.0048	0.0476	mg/Kg	<MDL	

SB:WG142384-2 MB:WG142384-1 Matrix: SOLIDBLANK Listtype:MTHG-MIDS Method:SW846 7471B Project: Pkey:STD
(Spike Blank, Method Blank)

Parameter	MDL	RDL	Units	MB Value	True Value	SB Value	% Rec.	Qual	Lab Limit
Mercury, Total, CVAA	0.0048	0.0476	mg/Kg	<MDL	0.0952	0.0966	101		85--115

LD:WG142384-3 L63934-5 Matrix: FRSHWTRSED Listtype:MTHG-MIDS Method:SW846 7471B Project:423368-210-1 Pkey:SED
(Lab Duplicate)

Parameter	MDL	RDL	Units	SAMP Value	LD Value	RPD	Qual	Lab Limit
Mercury, Total, CVAA	0.0051	0.0508	mg/Kg	0.113	0.105	7		0--20

MSD:WG142384-5 MS:WG142384-4 L63934-5 Matrix: FRSHWTRSED Listtype:MTHG-MIDS Method:SW846 7471B Project:423368-210-1 Pkey:SED
(Matrix Spike Duplicate, Matrix Spike)

Parameter	MDL	RDL	Units	SAMP Value	True Value	MS Value	% Rec.	Qual	Lab Limit	True Value	MSD Value	% Rec.	Qual	RPD	Qual	Lab Limit
Mercury, Total, CVAA	0.0048	0.0482	mg/Kg	0.113	0.0964	0.221	113		75--125	0.1	0.21	97		5		0--20

LCSD:WG142384-7 LCS:WG142384-6 Matrix: FRSHWTRSED Listtype:MTHG-MIDS Method:SW846 7471B Project: Pkey:SED
(Lab Control Sample Duplicate, Lab Control Sample)

Parameter	MDL	RDL	Units	True Value	LCS Value	% Rec.	Qual	Lab Limit	True Value	LCSD Value	% Rec.	Qual	RPD	Qual	Lab Limit
Mercury, Total, CVAA	0.25	2.5	mg/Kg	8.22	8.85	108		73--130	8.22	8.67	105		2		0--20

Workgroup: WG143422 Total Metals

Sample	Project	Project Description	List Type	Matrix	Collect Date	Prep Date	Anal Date	QC Association	Comments
L63612-10	421235	MAJOR LAKES (wtr col)	MTICPMS-SED	FRSHWTRSED	9/1/2015 9:25	12/10/2015 8:00	12/14/2015 15:52	WG143422-5,-6,-1,-2,-3,-4,-7,-8	
L63612-12	421235	MAJOR LAKES (wtr col)	MTICPMS-SED	FRSHWTRSED	9/1/2015 8:34	12/10/2015 8:00	12/14/2015 16:01		
L63612-34	421235	MAJOR LAKES (wtr col)	MTICPMS-SED	FRSHWTRSED	9/2/2015 9:53	12/10/2015 8:00	12/14/2015 16:05		
L63612-36	421235	MAJOR LAKES (wtr col)	MTICPMS-SED	FRSHWTRSED	9/2/2015 10:17	12/10/2015 8:00	12/14/2015 16:15		
L63612-38	421235	MAJOR LAKES (wtr col)	MTICPMS-SED	FRSHWTRSED	9/2/2015 10:50	12/10/2015 8:00	12/14/2015 16:18		
L63934-1	423368-210-1	CSO Sediment Quality Cha	MTICPMS-SED	FRSHWTRSED	10/14/2015 7:54	12/10/2015 8:00	12/15/2015 10:38		
L63934-2	423368-210-1	CSO Sediment Quality Cha	MTICPMS-SED	FRSHWTRSED	10/14/2015 8:30	12/10/2015 8:00	12/15/2015 10:41		
L63934-3	423368-210-1	CSO Sediment Quality Cha	MTICPMS-SED	FRSHWTRSED	10/14/2015 8:58	12/10/2015 8:00	12/15/2015 10:44		
L63934-4	423368-210-1	CSO Sediment Quality Cha	MTICPMS-SED	FRSHWTRSED	10/14/2015 8:07	12/10/2015 8:00	12/15/2015 10:54		
L63934-5	423368-210-1	CSO Sediment Quality Cha	MTICPMS-SED	FRSHWTRSED	10/14/2015 9:11	12/10/2015 8:00	12/15/2015 10:57		
L63934-6	423368-210-1	CSO Sediment Quality Cha	MTICPMS-SED	FRSHWTRSED	10/14/2015 9:41	12/10/2015 8:00	12/15/2015 11:01		
L63934-7	423368-210-1	CSO Sediment Quality Cha	MTICPMS-SED	FRSHWTRSED	10/14/2015 8:16	12/10/2015 8:00	12/15/2015 11:04		
WG143422-1	MB		MTICPMS-SED	SOLIDBLANK		12/10/2015 8:00	12/14/2015 15:35		METHOD BLANK
WG143422-2	SB		MTICPMS-SED	SOLIDBLANK		12/10/2015 8:00	12/14/2015 15:39		WG143422-1 MS-100
WG143422-3	LD		MTICPMS-SED	FRSHWTRSED		12/10/2015 8:00	12/14/2015 15:55		L63612-10 RPD-SOL
WG143422-4	MS		MTICPMS-SED	FRSHWTRSED		12/10/2015 8:00	12/14/2015 15:58		L63612-10 MS-100
WG143422-5	LD		MTICPMS-SED	FRSHWTRSED		12/10/2015 8:00	12/15/2015 10:48		L63934-3 RPD-SOL
WG143422-6	MS		MTICPMS-SED	FRSHWTRSED		12/10/2015 8:00	12/15/2015 10:51		L63934-3 MS-100
WG143422-7	LCS		MTICPMS-SED	SOIL		12/10/2015 8:00	12/14/2015 15:42		ERASOIL
WG143422-8	LCSD		MTICPMS-SED	SOIL		12/10/2015 8:00	12/14/2015 15:45		WG143422-7 ERASOIL

Workgroup: WG143422 Total Metals

MB:WG143422-1 Matrix: SOLIDBLANK Listtype:MTICPMS-SED Method:SW846 3050B(MODSB)*SW846 6020A Project: Pkey:STD
(Method Blank)

Parameter	MDL	RDL	Units	MB Value	Qual
Tin, Total, ICP-MS	0.12	0.357	mg/Kg	<MDL	
Antimony, Total, ICP-MS	0.024	0.119	mg/Kg	<MDL	

SB:WG143422-2 MB:WG143422-1 Matrix: SOLIDBLANK Listtype:MTICPMS-SED Method:SW846 3050B(MODSB)*SW846 6020A Project: Pkey:STD
(Spike Blank, Method Blank)

Parameter	MDL	RDL	Units	MB Value	True Value	SB Value	% Rec.	Qual	Lab Limit
Tin, Total, ICP-MS	0.12	0.357	mg/Kg	<MDL	4.76	4.76	100		85--115
Antimony, Total, ICP-MS	0.024	0.119	mg/Kg	<MDL	4.76	4.97	104		85--115

LD:WG143422-3 L63612-10 Matrix: FRSHWTRSED Listtype:MTICPMS-SED Method:SW846 3050B(MODSB)*SW846 6020A Project:421235 Pkey:SED
(Lab Duplicate)

Parameter	MDL	RDL	Units	SAMP Value	LD Value	RPD	Qual	Lab Limit
Tin, Total, ICP-MS	0.062	0.186	mg/Kg	0.477	0.474	1		0--20

MS:WG143422-4 L63612-10 Matrix: FRSHWTRSED Listtype:MTICPMS-SED Method:SW846 3050B(MODSB)*SW846 6020A Project:421235 Pkey:SED
(Matrix Spike)

Parameter	MDL	RDL	Units	SAMP Value	True Value	MS Value	% Rec.	Qual	Lab Limit
Tin, Total, ICP-MS	0.062	0.186	mg/Kg	0.477	2.49	3.1	105		75--125

LD:WG143422-5 L63934-3 Matrix: FRSHWTRSED Listtype:MTICPMS-SED Method:SW846 3050B(MODSB)*SW846 6020A Project:423368-210-1 Pkey:SED
(Lab Duplicate)

Parameter	MDL	RDL	Units	SAMP Value	LD Value	RPD	Qual	Lab Limit
Antimony, Total, ICP-MS	0.01	0.0499	mg/Kg	1.53	1.64	7		0--20

MS:WG143422-6 L63934-3 Matrix: FRSHWTRSED Listtype:MTICPMS-SED Method:SW846 3050B(MODSB)*SW846 6020A Project:423368-210-1 Pkey:SED
(Matrix Spike)

Parameter	MDL	RDL	Units	SAMP Value	True Value	MS Value	% Rec.	Qual	Lab Limit
Antimony, Total, ICP-MS	0.01	0.0499	mg/Kg	1.53	0.98	2.08	56	*	75--125

LCSD:WG143422-8 LCS:WG143422-7 Matrix: SOIL Listtype:MTICPMS-SED Method:SW846 3050B(MODSB)*SW846 6020A Project: Pkey:STD
(Lab Control Sample Duplicate, Lab Control Sample)

Parameter	MDL	RDL	Units	True Value	LCS Value	% Rec.	Qual	Lab Limit	True Value	LCSD Value	% Rec.	Qual	RPD	Qual	Lab Limit
Tin, Total, ICP-MS	0.5	1.51	mg/Kg	100	114	114		77--124	100	111	111		2		0--20
Antimony, Total, ICP-MS	0.1	0.502	mg/Kg	215	191	89		17--94	215	178	83		7		0--20

Workgroup: WG143629 Total Metals

Sample	Project	Project Description	List Type	Matrix	Collect Date	Prep Date	Anal Date	QC Association	Comments
L63466-1	423589-335-4	LDW Green River, Suspen	MTICPMS-SED	TRAP SED	9/15/2015 9:00	12/18/2015 8:00	12/22/2015 11:46	WG143629-1,-2,-3,-4,-5,-6,-7	
L63466-2	423589-335-4	LDW Green River, Suspen	MTICPMS-SED	TRAP SED	9/15/2015 13:15	12/18/2015 8:00	12/22/2015 11:51		
L63466-3	423589-335-4	LDW Green River, Suspen	MTICPMS-SED	TRAP SED	9/15/2015 9:45	12/18/2015 8:00	12/22/2015 11:56		
L63466-4	423589-335-4	LDW Green River, Suspen	MTICPMS-SED	TRAP SED	9/15/2015 11:30	12/18/2015 8:00	12/22/2015 12:01		
L63466-5	423589-335-4	LDW Green River, Suspen	MTICPMS-SED	TRAP SED	8/5/2015 10:00	12/18/2015 8:00	12/22/2015 12:06		
L63466-6	423589-335-4	LDW Green River, Suspen	MTICPMS-SED	TRAP SED	9/15/2015 13:15	12/18/2015 8:00	12/22/2015 12:22		
L63466-7	423589-335-4	LDW Green River, Suspen	MTICPMS-SED	TRAP SED	9/15/2015 12:30	12/18/2015 8:00	12/22/2015 12:27		
L63858-1	423589-335-4	LDW Green River, Suspen	MTICPMS-SED	FILTER SED	9/22/2015 0:00	12/18/2015 8:00	12/22/2015 12:32		
L63934-1	423368-210-1	CSO Sediment Quality Cha	MTICPMS-SED	FRSHWTRSED	10/14/2015 7:54	12/18/2015 8:00	12/22/2015 12:37		
L63934-2	423368-210-1	CSO Sediment Quality Cha	MTICPMS-SED	FRSHWTRSED	10/14/2015 8:30	12/18/2015 8:00	12/22/2015 12:42		
L63934-3	423368-210-1	CSO Sediment Quality Cha	MTICPMS-SED	FRSHWTRSED	10/14/2015 8:58	12/18/2015 8:00	12/22/2015 12:47		
L63934-4	423368-210-1	CSO Sediment Quality Cha	MTICPMS-SED	FRSHWTRSED	10/14/2015 8:07	12/18/2015 8:00	12/22/2015 12:52		
L63934-5	423368-210-1	CSO Sediment Quality Cha	MTICPMS-SED	FRSHWTRSED	10/14/2015 9:11	12/18/2015 8:00	12/22/2015 12:57		
L63934-6	423368-210-1	CSO Sediment Quality Cha	MTICPMS-SED	FRSHWTRSED	10/14/2015 9:41	12/18/2015 8:00	12/22/2015 13:02		
L63934-7	423368-210-1	CSO Sediment Quality Cha	MTICPMS-SED	FRSHWTRSED	10/14/2015 8:16	12/18/2015 8:00	12/22/2015 13:07		
L64107-1	423589-335-4	LDW Green River, Suspen	MTICPMS-SED	FILTER SED	10/26/2015 11:30	12/18/2015 8:00	12/22/2015 13:23		
L64265-1	423589-335-4	LDW Green River, Suspen	MTICPMS-SED	FILTER SED	11/14/2015 12:30	12/18/2015 8:00	12/22/2015 13:28		
WG143629-1	MB		MTICPMS-SED	SOLIDBLANK		12/18/2015 8:00	12/22/2015 11:21		METHOD BLANK
WG143629-2	SB		MTICPMS-SED	SOLIDBLANK		12/18/2015 8:00	12/22/2015 11:26		WG143629-1 MS-100
WG143629-3	LD		MTICPMS-SED	FILTER SED		12/18/2015 8:00	12/22/2015 13:33		L64265-1 RPD-SOL
WG143629-4	MS		MTICPMS-SED	FILTER SED		12/18/2015 8:00	12/22/2015 13:38		L64265-1 MS-100
WG143629-5	LCS		MTICPMS-SED	FRSHWTRSED		12/18/2015 8:00	12/22/2015 11:31		BUFFSED
WG143629-6	LCS		MTICPMS-SED	SOIL		12/18/2015 8:00	12/22/2015 11:36		ERASOIL
WG143629-7	LCSD		MTICPMS-SED	SOIL		12/18/2015 8:00	12/22/2015 11:41		WG143629-6 ERASOIL

Workgroup: WG143629 Total Metals

MB:WG143629-1 Matrix: SOLIDBLANK Listtype:MTICPMS-SED Method:SW846 3050B(MODSB)*SW846 6020A Project: Pkey:STD
(Method Blank)

Parameter	MDL	RDL	Units	MB Value	Qual
Vanadium, Total, ICP-MS	0.018	0.0893	mg/Kg	<MDL	
Chromium, Total, ICP-MS	0.048	0.238	mg/Kg	<MDL	
Nickel, Total, ICP-MS	0.024	0.119	mg/Kg	<MDL	
Copper, Total, ICP-MS	0.048	0.476	mg/Kg	<MDL	
Zinc, Total, ICP-MS	0.12	0.595	mg/Kg	<MDL	
Arsenic, Total, ICP-MS	0.024	0.119	mg/Kg	<MDL	
Silver, Total, ICP-MS	0.0095	0.0476	mg/Kg	<MDL	
Cadmium, Total, ICP-MS	0.012	0.0595	mg/Kg	<MDL	
Lead, Total, ICP-MS	0.024	0.119	mg/Kg	<MDL	

SB:WG143629-2 MB:WG143629-1 Matrix: SOLIDBLANK Listtype:MTICPMS-SED Method:SW846 3050B(MODSB)*SW846 6020A Project: Pkey:STD
(Spike Blank, Method Blank)

Parameter	MDL	RDL	Units	MB Value	True Value	SB Value	% Rec.	Qual	Lab Limit
Vanadium, Total, ICP-MS	0.018	0.0893	mg/Kg	<MDL	4.76	4.97	104		85--115
Chromium, Total, ICP-MS	0.048	0.238	mg/Kg	<MDL	4.76	5.05	106		85--115
Nickel, Total, ICP-MS	0.024	0.119	mg/Kg	<MDL	4.76	5.19	109		85--115
Copper, Total, ICP-MS	0.048	0.476	mg/Kg	<MDL	4.76	5.29	111		85--115
Zinc, Total, ICP-MS	0.12	0.595	mg/Kg	<MDL	4.76	5.08	107		85--115
Arsenic, Total, ICP-MS	0.024	0.119	mg/Kg	<MDL	4.76	5.1	107		85--115
Silver, Total, ICP-MS	0.0095	0.0476	mg/Kg	<MDL	4.76	5.24	110		85--115
Cadmium, Total, ICP-MS	0.012	0.0595	mg/Kg	<MDL	4.76	4.82	101		85--115
Lead, Total, ICP-MS	0.024	0.119	mg/Kg	<MDL	4.76	5.04	106		85--115

LD:WG143629-3 L64265-1 Matrix: FILTER SED Listtype:MTICPMS-SED Method:SW846 3050B(MODSB)*SW846 6020A Project:423589-335-4 Pkey:STD
(Lab Duplicate)

Parameter	MDL	RDL	Units	SAMP Value	LD Value	RPD	Qual	Lab Limit
Vanadium, Total, ICP-MS	0.093	0.465	mg/Kg	36.5	37	1		0--20
Chromium, Total, ICP-MS	0.25	1.24	mg/Kg	15.6	15.8	1		0--20
Nickel, Total, ICP-MS	0.12	0.621	mg/Kg	14.4	14.7	2		0--20
Copper, Total, ICP-MS	0.25	2.48	mg/Kg	20.1	19.7	2		0--20
Zinc, Total, ICP-MS	0.12	0.621	mg/Kg	50.3	50.9	1		0--20
Arsenic, Total, ICP-MS	0.025	0.124	mg/Kg	6.27	6.1	3		0--20
Silver, Total, ICP-MS	0.0099	0.0497	mg/Kg	0.0606	0.0599	1		0--20
Cadmium, Total, ICP-MS	0.012	0.0621	mg/Kg	0.128	0.122	5		0--20
Lead, Total, ICP-MS	0.025	0.124	mg/Kg	5.88	5.62	5		0--20

MS:WG143629-4 L64265-1 Matrix: FILTER SED Listtype:MTICPMS-SED Method:SW846 3050B(MODSB)*SW846 6020A Project:423589-335-4 Pkey:STD
(Matrix Spike)

Parameter	MDL	RDL	Units	SAMP Value	True Value	MS Value	% Rec.	Qual	Lab Limit
Vanadium, Total, ICP-MS	0.093	0.465	mg/Kg	36.5	4.97	41.6		4xRule	75--125
Chromium, Total, ICP-MS	0.25	1.24	mg/Kg	15.6	4.97	20.3	94		75--125
Nickel, Total, ICP-MS	0.12	0.621	mg/Kg	14.4	4.97	18.8	89		75--125
Copper, Total, ICP-MS	0.25	2.48	mg/Kg	20.1	4.97	23.7		4xRule	75--125
Zinc, Total, ICP-MS	0.12	0.621	mg/Kg	50.3	4.97	55.4		4xRule	75--125
Arsenic, Total, ICP-MS	0.025	0.124	mg/Kg	6.27	4.97	10.8	91		75--125
Silver, Total, ICP-MS	0.0099	0.0497	mg/Kg	0.0606	4.97	4.37	87		75--125
Cadmium, Total, ICP-MS	0.012	0.0621	mg/Kg	0.128	4.97	4.87	96		75--125
Lead, Total, ICP-MS	0.025	0.124	mg/Kg	5.88	4.97	11.2	106		75--125

LCS:WG143629-5 Matrix: FRSHWTRSED Listtype:MTICPMS-SED Method:SW846 3050B(MODSB)*SW846 6020A Project: Pkey:SED
(Lab Control Sample)

Parameter	MDL	RDL	Units	True Value	LCS Value	% Rec.	Qual	Lab Limit
Vanadium, Total, ICP-MS	0.074	0.372	mg/Kg	94.6	23	24		10--44
Chromium, Total, ICP-MS	0.2	0.992	mg/Kg	121.9	68	56		40--80
Nickel, Total, ICP-MS	0.099	0.496	mg/Kg	42.9	35.2	82		70--105
Zinc, Total, ICP-MS	0.5	2.48	mg/Kg	408	440	108		69--109
Arsenic, Total, ICP-MS	0.099	0.496	mg/Kg	17	16.3	96		66--141
Cadmium, Total, ICP-MS	0.05	0.248	mg/Kg	2.94	3.09	105		83--123
Lead, Total, ICP-MS	0.099	0.496	mg/Kg	150	148	99		71--111

LCSD:WG143629-7 LCS:WG143629-6 Matrix: SOIL Listtype:MTICPMS-SED Method:SW846 3050B(MODSB)*SW846 6020A Project: Pkey:STD
(Lab Control Sample Duplicate, Lab Control Sample)

Parameter	MDL	RDL	Units	True Value	LCS Value	% Rec.	Qual	Lab Limit	True Value	LCSD Value	% Rec.	Qual	RPD	Qual	Lab Limit
Vanadium, Total, ICP-MS	0.075	0.374	mg/Kg	73	66.4	91		76--124	73	64.6	88		3		0--20
Chromium, Total, ICP-MS	0.2	0.996	mg/Kg	164	156	95		79--121	164	149	91		5		0--20
Nickel, Total, ICP-MS	0.1	0.498	mg/Kg	89.3	86.9	97		80--120	89.3	82.9	93		5		0--20
Copper, Total, ICP-MS	0.2	1.99	mg/Kg	128	134	105		80--120	128	119	93		12		0--20
Zinc, Total, ICP-MS	0.5	2.49	mg/Kg	168	184	110		80--120	168	180	107		2		0--20
Arsenic, Total, ICP-MS	0.1	0.498	mg/Kg	113	121	107		78--123	113	118	105		3		0--20
Silver, Total, ICP-MS	0.04	0.199	mg/Kg	52.6	57	108		74--126	52.6	56.4	107		1		0--20
Cadmium, Total, ICP-MS	0.05	0.249	mg/Kg	67.5	70	104		80--120	67.5	67.4	100		4		0--20
Lead, Total, ICP-MS	0.1	0.498	mg/Kg	90.1	95.7	106		80--120	90.1	91.4	101		5		0--20

ORGANIC CHEMISTRY QC DATA

Workgroup: WG143157 Semi Volatile Organics

Sample	Project	Project Description	List Type	Matrix	Collect Date	Prep Date	Anal Date	QC Association	Comments
L64264-1	423368-210-1	CSO Sediment Quality Cha	ORBNASMS	FRSHWTRSED	10/14/2015 7:54	11/24/2015 17:00	12/11/2015 16:28	WG143157-1,-2,-3,-4,-5,-6,-7	
L64264-2	423368-210-1	CSO Sediment Quality Cha	ORBNASMS	FRSHWTRSED	10/14/2015 8:30	11/24/2015 17:00	12/11/2015 17:11		
L64264-3	423368-210-1	CSO Sediment Quality Cha	ORBNASMS	FRSHWTRSED	10/14/2015 8:58	11/24/2015 17:00	12/11/2015 17:54		
L64264-4	423368-210-1	CSO Sediment Quality Cha	ORBNASMS	FRSHWTRSED	10/14/2015 8:07	11/24/2015 17:00	12/11/2015 18:37		
L64264-5	423368-210-1	CSO Sediment Quality Cha	ORBNASMS	FRSHWTRSED	10/14/2015 9:11	11/24/2015 17:00	12/11/2015 19:20		
L64264-6	423368-210-1	CSO Sediment Quality Cha	ORBNASMS	FRSHWTRSED	10/14/2015 9:41	11/24/2015 17:00	12/11/2015 20:03		
L64264-7	423368-210-1	CSO Sediment Quality Cha	ORBNASMS	FRSHWTRSED	10/14/2015 8:16	11/24/2015 17:00	12/11/2015 20:46		
WG143157-1	MB		ORBNASMS	OTHR SOLID		11/24/2015 17:00	12/11/2015 11:29		MB151124
WG143157-2	SB		ORBNASMS	OTHR SOLID		11/24/2015 17:00	12/11/2015 12:12		WG143157-1
WG143157-3	MS		ORBNASMS	FRSHWTRSED		11/24/2015 17:00	12/11/2015 12:55		L64264-1
WG143157-4	MSD		ORBNASMS	FRSHWTRSED		11/24/2015 17:00	12/11/2015 13:37		WG143157-3 L64264-1
WG143157-5	SRM		ORBNASMS	SALTWTRSED		11/24/2015 17:00	12/11/2015 14:20		WG143157-1
WG143157-6	SRMD		ORBNASMS	SALTWTRSED		11/24/2015 17:00	12/11/2015 15:03		WG143157-5 WG143157-1
WG143157-7	LD		ORBNASMS	FRSHWTRSED		11/24/2015 17:00	12/11/2015 15:46		L64264-2

Workgroup: WG143157 Semi Volatile Organics

MB:WG143157-1 Matrix: OTHR SOLID Listtype:ORBNASMS Method:SW846 3550B*SW846 8270D Project: Pkey:STD
(Method Blank)

Parameter	MDL	RDL	Units	MB Value	Qual
Phenol	17	50	ug/Kg	<MDL	
1,4-Dichlorobenzene	5	5	ug/Kg	<MDL	
Benzyl Alcohol	8.33	8.33	ug/Kg	<MDL	
1,2-Dichlorobenzene	3.33	3.33	ug/Kg	<MDL	
2-Methylphenol	3.3	6.67	ug/Kg	<MDL	
3-,4-Methylphenol	17	33.3	ug/Kg	<MDL	
2,4-Dimethylphenol	3.3	6.67	ug/Kg	<MDL	
Benzoic Acid	66.7	66.7	ug/Kg	<MDL	
1,2,4-Trichlorobenzene	0.33	0.667	ug/Kg	<MDL	
Naphthalene	3.3	6.67	ug/Kg	<MDL	
Hexachlorobutadiene	1.7	3.33	ug/Kg	<MDL	
2-Methylnaphthalene	3.3	6.67	ug/Kg	<MDL	
1-Methylnaphthalene	3.3	6.67	ug/Kg	<MDL	
Dimethyl Phthalate	6.67	6.67	ug/Kg	<MDL	
Acenaphthylene	3.3	6.67	ug/Kg	<MDL	
Acenaphthene	3.3	6.67	ug/Kg	<MDL	
Dibenzofuran	3.3	6.67	ug/Kg	<MDL	
Diethyl Phthalate	6.7	13.3	ug/Kg	<MDL	
Fluorene	3.3	6.67	ug/Kg	<MDL	
N-Nitrosodiphenylamine	8.33	8.33	ug/Kg	<MDL	
Hexachlorobenzene	0.33	0.667	ug/Kg	<MDL	
Pentachlorophenol	50	50	ug/Kg	<MDL	
Phenanthrene	3.3	6.67	ug/Kg	<MDL	
Anthracene	3.3	6.67	ug/Kg	<MDL	
Carbazole	3.3	6.67	ug/Kg	<MDL	
Di-N-Butyl Phthalate	6.7	13.3	ug/Kg	<MDL	
Fluoranthene	3.3	6.67	ug/Kg	<MDL	
Pyrene	3.3	6.67	ug/Kg	<MDL	
Benzyl Butyl Phthalate	5	5	ug/Kg	<MDL	
Benzo(a)anthracene	3.3	6.67	ug/Kg	<MDL	
Chrysene	3.3	6.67	ug/Kg	<MDL	
Bis(2-Ethylhexyl)Phthalate	6.7	13.3	ug/Kg	<MDL	
Di-N-Octyl Phthalate	6.67	6.67	ug/Kg	<MDL	
Benzo(b,j,k)fluoranthene	3.3	6.67	ug/Kg	<MDL	
Benzo(a)pyrene	3.3	6.67	ug/Kg	<MDL	
Indeno(1,2,3-Cd)Pyrene	3.3	6.67	ug/Kg	<MDL	
Dibenzo(a,h)anthracene	3.3	6.67	ug/Kg	<MDL	
Benzo(g,h,i)perylene	3.3	6.67	ug/Kg	<MDL	

SB:WG143157-2 MB:WG143157-1 Matrix: OTHR SOLID Listtype:ORBNASMS Method:SW846 3550B*SW846 8270D Project: Pkey:STD
(Spike Blank, Method Blank)

Parameter	MDL	RDL	Units	MB Value	True Value	SB Value	% Rec.	Qual	Lab Limit
Phenol	17	50	ug/Kg	<MDL	833	518	62		26--136
1,4-Dichlorobenzene	5	5	ug/Kg	<MDL	833	408	49		40--103
Benzyl Alcohol	8.33	8.33	ug/Kg	<MDL	833	472	57		26--111
1,2-Dichlorobenzene	3.33	3.33	ug/Kg	<MDL	833	426	51		44--105
2-Methylphenol	3.3	6.67	ug/Kg	<MDL	833	461	55		20--123
3-,4-Methylphenol	17	33.3	ug/Kg	<MDL	833	468	56		22--119
2,4-Dimethylphenol	3.3	6.67	ug/Kg	<MDL	833	241	29		20--121
Benzoic Acid	66.7	66.7	ug/Kg	<MDL	833	316	38		20--92
1,2,4-Trichlorobenzene	0.33	0.667	ug/Kg	<MDL	833	407	49		39--94
Naphthalene	3.3	6.67	ug/Kg	<MDL	833	467	56		28--109
Hexachlorobutadiene	1.7	3.33	ug/Kg	<MDL	833	476	57		20--135
2-Methylnaphthalene	3.3	6.67	ug/Kg	<MDL	833	457	55		20--128
1-Methylnaphthalene	3.3	6.67	ug/Kg	<MDL	833	504	60		20--128
Dimethyl Phthalate	6.67	6.67	ug/Kg	<MDL	833	729	88		70--129
Acenaphthylene	3.3	6.67	ug/Kg	<MDL	833	518	62		45--132
Acenaphthene	3.3	6.67	ug/Kg	<MDL	833	595	71		43--126
Dibenzofuran	3.3	6.67	ug/Kg	<MDL	833	519	62		52--133
Diethyl Phthalate	6.7	13.3	ug/Kg	<MDL	833	707	85		75--131
Fluorene	3.3	6.67	ug/Kg	<MDL	833	753	90		57--150
N-Nitrosodiphenylamine	8.33	8.33	ug/Kg	<MDL	833	806	97		57--136
Hexachlorobenzene	0.33	0.667	ug/Kg	<MDL	833	605	73		53--150
Pentachlorophenol	50	50	ug/Kg	<MDL	833	655	79		25--135
Phenanthrene	3.3	6.67	ug/Kg	<MDL	833	594	71		47--141
Anthracene	3.3	6.67	ug/Kg	<MDL	833	575	69		48--149
Carbazole	3.3	6.67	ug/Kg	<MDL	833	621	75		48--149
Di-N-Butyl Phthalate	6.7	13.3	ug/Kg	<MDL	833	780	94		71--142
Fluoranthene	3.3	6.67	ug/Kg	<MDL	833	612	73		56--143
Pyrene	3.3	6.67	ug/Kg	<MDL	833	826	99		60--144
Benzyl Butyl Phthalate	5	5	ug/Kg	<MDL	833	1000	120		36--150
Benzo(a)anthracene	3.3	6.67	ug/Kg	<MDL	833	721	86		51--150
Chrysene	3.3	6.67	ug/Kg	<MDL	833	704	84		45--150
Bis(2-Ethylhexyl)Phthalate	6.7	13.3	ug/Kg	<MDL	833	939	113		61--150
Di-N-Octyl Phthalate	6.67	6.67	ug/Kg	<MDL	833	971	116		43--150
Benzo(b,j,k)fluoranthene	3.3	6.67	ug/Kg	<MDL	2500	1620	65		45--143
Benzo(a)pyrene	3.3	6.67	ug/Kg	<MDL	833	764	92		61--140
Indeno(1,2,3-Cd)Pyrene	3.3	6.67	ug/Kg	<MDL	833	652	78		42--150
Dibenzo(a,h)anthracene	3.3	6.67	ug/Kg	<MDL	833	625	75		41--150
Benzo(g,h,i)perylene	3.3	6.67	ug/Kg	<MDL	833	449	54		28--150

MSD:WG143157-4 MS:WG143157-3 L64264-1 Matrix: FRSHWTRSED Listtype:ORBNASMS Method:SW846 3550B*SW846 8270D Project:423368-210-1 Pkey:SED
(Matrix Spike Duplicate, Matrix Spike)

Parameter	MDL	RDL	Units	SAMP Value	True Value	MS Value	% Rec.	Qual	Lab Limit	True Value	MSD Value	% Rec.	Qual	RPD	Qual	Lab Limit
Phenol	170	500	ug/Kg	<MDL	833	620	74		21--142	833	650	78		5		0--35
1,4-Dichlorobenzene	50	50	ug/Kg	<MDL	833	473	57		20--105	833	425	51		11		0--35
Benzyl Alcohol	83.3	83.3	ug/Kg	<MDL	833	493	59		28--111	833	562	67		13		0--35
1,2-Dichlorobenzene	33.3	33.3	ug/Kg	<MDL	833	504	60		20--110	833	476	57		6		0--35
2-Methylphenol	33	66.7	ug/Kg	<MDL	833	625	75		21--126	833	666	80		6		0--35
3-,4-Methylphenol	170	333	ug/Kg	<MDL	833	775	93		24--129	833	709	85		9		0--35
2,4-Dimethylphenol	33	66.7	ug/Kg	<MDL	833	885	106		27--126	833	960	115		8		0--35
Benzoic Acid	667	667	ug/Kg	<MDL	833	855	103		20--150	833	1000	120		16		0--35
1,2,4-Trichlorobenzene	3.3	6.67	ug/Kg	<MDL	833	505	61		22--95	833	548	66		8		0--35
Naphthalene	33	66.7	ug/Kg	<MDL	833	592	71		20--112	833	634	76		7		0--35
Hexachlorobutadiene	17	33.3	ug/Kg	<MDL	833	571	69		20--133	833	595	71		4		0--35
2-Methylnaphthalene	33	66.7	ug/Kg	<MDL	833	620	74		22--109	833	675	81		9		0--35
1-Methylnaphthalene	33	66.7	ug/Kg	<MDL	833	691	83		22--109	833	750	90		8		0--35
Dimethyl Phthalate	66.7	66.7	ug/Kg	112	833	754	77		66--128	833	836	87		10		0--35
Acenaphthylene	33	66.7	ug/Kg	34	833	709	81		44--134	833	773	89		9		0--35
Acenaphthene	33	66.7	ug/Kg	41	833	767	87		37--129	833	823	94		7		0--35
Dibenzofuran	33	66.7	ug/Kg	<MDL	833	626	75		49--135	833	672	81		7		0--35
Diethyl Phthalate	67	133	ug/Kg	<MDL	833	600	72		71--130	833	648	78		8		0--35
Fluorene	33	66.7	ug/Kg	67.5	833	897	99		52--150	833	958	107		7		0--35
N-Nitrosodiphenylamine	83.3	83.3	ug/Kg	<MDL	833	904	109		58--140	833	974	117		7		0--35
Hexachlorobenzene	3.3	6.67	ug/Kg	<MDL	833	637	76		51--149	833	684	82		7		0--35
Pentachlorophenol	500	500	ug/Kg	<MDL	833	637	76		35--134	833	714	86		11		0--35
Phenanthrene	33	66.7	ug/Kg	427	833	965	65		51--136	833	1180	90		20		0--35
Anthracene	33	66.7	ug/Kg	85	833	694	73		37--150	833	749	80		8		0--35
Carbazole	33	66.7	ug/Kg	69	833	699	76		37--150	833	757	83		8		0--35
Di-N-Butyl Phthalate	67	133	ug/Kg	68	833	836	92		64--150	833	885	98		6		0--35
Fluoranthene	33	66.7	ug/Kg	1430	833	1860	51	*	53--144	833	2330	107		22		0--35
Pyrene	33	66.7	ug/Kg	1750	833	2330	69		59--143	833	2780	123		18		0--35
Benzyl Butyl Phthalate	50	50	ug/Kg	267	833	1130	103		27--150	833	1280	121		12		0--35
Benzo(a)anthracene	33	66.7	ug/Kg	554	833	1210	78		52--149	833	1270	86		5		0--35
Chrysene	33	66.7	ug/Kg	970	833	1480	61		47--141	833	1700	88		14		0--35
Bis(2-Ethylhexyl)Phthalate	67	133	ug/Kg	10500	833	10300	-33	*	54--150	833	11300	93		10		0--35
Di-N-Octyl Phthalate	66.7	66.7	ug/Kg	361	833	1420	127		43--150	833	1620	151	*	13		0--35
Benzo(b,j,k)fluoranthene	33	66.7	ug/Kg	2390	2500	3790	56		48--135	2500	4330	78		13		0--35
Benzo(a)pyrene	33	66.7	ug/Kg	815	833	1440	75		62--136	833	1570	91		9		0--35
Indeno(1,2,3-Cd)Pyrene	33	66.7	ug/Kg	385	833	804	50		41--150	833	811	51		1		0--35
Dibenzo(a,h)anthracene	33	66.7	ug/Kg	84.7	833	441	43		39--150	833	459	45		4		0--35
Benzo(g,h,i)perylene	33	66.7	ug/Kg	300	833	633	40		27--150	833	624	39		1		0--35

SRMD:WG143157-6 SRM:WG143157-5 Matrix: SALTWTRSED Listtype:ORBNASMS Method:SW846 3550B*SW846 8270D Project: Pkey:SED
(Std Reference Material Duplicate, Std Reference Material)

Parameter	MDL	RDL	Units	True Value	SRM Value	% Rec.	Qual	Lab Limit	True Value	SRMD Value	% Rec.	Qual	RPD	Qual	Lab Limit
Phenanthrene	170	333	ug/Kg	5200	3830	74		48--112	5200	3320	64		14		0--35
Fluoranthene	170	333	ug/Kg	8800	7020	80		51--127	8800	6280	71		11		0--35
Pyrene	170	333	ug/Kg	9570	9380	98		55--119	9570	8260	86		13		0--35
Benzo(a)anthracene	170	333	ug/Kg	4660	3710	80		45--122	4660	3300	71		12		0--35
Chrysene	170	333	ug/Kg	4800	5230	109		68--144	4800	4420	92		17		0--35
Benzo(b,j,k)fluoranthene	170	333	ug/Kg	8150	8270	101		50--122	8150	7390	91		11		0--35
Benzo(a)pyrene	170	333	ug/Kg	4240	3310	78		38--117	4240	2960	70		11		0--35
Indeno(1,2,3-Cd)Pyrene	170	333	ug/Kg	2740	1920	70		36--127	2740	1800	66		7		0--35
Dibenzo(a,h)anthracene	170	333	ug/Kg	419	555	132		51--200	419	491	117		12		0--35
Benzo(g,h,i)perylene	170	333	ug/Kg	2800	1330	47		32--133	2800	1270	45		4		0--35

LD:WG143157-7 L64264-2 Matrix: FRSHWTRSED Listtype:ORBNASMS Method:SW846 3550B*SW846 8270D Project:423368-210-1 Pkey:SED
(Lab Duplicate)

Parameter	MDL	RDL	Units	SAMP Value	LD Value	RPD	Qual	Lab Limit
Phenol	170	500	ug/Kg	<MDL	<MDL			0--35
1,4-Dichlorobenzene	50	50	ug/Kg	<MDL	<MDL			0--35
Benzyl Alcohol	83.3	83.3	ug/Kg	<MDL	<MDL			0--35
1,2-Dichlorobenzene	33.3	33.3	ug/Kg	<MDL	<MDL			0--35
2-Methylphenol	33	66.7	ug/Kg	<MDL	<MDL			0--35
3-,4-Methylphenol	170	333	ug/Kg	<MDL	<MDL			0--35
2,4-Dimethylphenol	33	66.7	ug/Kg	<MDL	<MDL			0--35
Benzoic Acid	667	667	ug/Kg	<MDL	<MDL			0--35
1,2,4-Trichlorobenzene	3.3	6.67	ug/Kg	<MDL	<MDL			0--35
Naphthalene	33	66.7	ug/Kg	<MDL	<MDL			0--35
Hexachlorobutadiene	17	33.3	ug/Kg	<MDL	<MDL			0--35
2-Methylnaphthalene	33	66.7	ug/Kg	<MDL	<MDL			0--35
1-Methylnaphthalene	33	66.7	ug/Kg	<MDL	<MDL			0--35
Dimethyl Phthalate	66.7	66.7	ug/Kg	82.7	93.9	13		0--35
Acenaphthylene	33	66.7	ug/Kg	<MDL	33			0--35
Acenaphthene	33	66.7	ug/Kg	<MDL	<MDL			0--35
Dibenzofuran	33	66.7	ug/Kg	<MDL	<MDL			0--35
Diethyl Phthalate	67	133	ug/Kg	<MDL	<MDL			0--35
Fluorene	33	66.7	ug/Kg	52	49			0--35
N-Nitrosodiphenylamine	83.3	83.3	ug/Kg	<MDL	<MDL			0--35
Hexachlorobenzene	3.3	6.67	ug/Kg	<MDL	<MDL			0--35
Pentachlorophenol	500	500	ug/Kg	<MDL	<MDL			0--35
Phenanthrene	33	66.7	ug/Kg	243	289	17		0--35
Anthracene	33	66.7	ug/Kg	78.8	81.6	4		0--35
Carbazole	33	66.7	ug/Kg	<MDL	35			0--35
Di-N-Butyl Phthalate	67	133	ug/Kg	<MDL	<MDL			0--35
Fluoranthene	33	66.7	ug/Kg	833	904	8		0--35
Pyrene	33	66.7	ug/Kg	964	1020	5		0--35
Benzyl Butyl Phthalate	50	50	ug/Kg	<MDL	<MDL			0--35
Benzo(a)anthracene	33	66.7	ug/Kg	332	320	4		0--35
Chrysene	33	66.7	ug/Kg	497	538	8		0--35
Bis(2-Ethylhexyl)Phthalate	67	133	ug/Kg	1910	1960	2		0--35
Di-N-Octyl Phthalate	66.7	66.7	ug/Kg	<MDL	<MDL			0--35
Benzo(b,j,k)fluoranthene	33	66.7	ug/Kg	929	919	1		0--35
Benzo(a)pyrene	33	66.7	ug/Kg	393	381	3		0--35
Indeno(1,2,3-Cd)Pyrene	33	66.7	ug/Kg	194	194	0		0--35
Dibenzo(a,h)anthracene	33	66.7	ug/Kg	39	38			0--35
Benzo(g,h,i)perylene	33	66.7	ug/Kg	151	150	1		0--35

Surrogate: (Lab Limits)	2,4,6-Tribromo phenol 45--150	2-Fluoro biphenyl 22--135	2-Fluoro phenol 20--136	d14-Ter phenyl 25--150	d4-2-Chloro phenol 20--127	d5-Nitro benzene 22--126	d5-Phenol 20--142
L64264-1	61	60	41	71	50	59	57
L64264-2	58	56	49	72	54	56	55
L64264-3	57	59	52	69	57	62	61
L64264-4	60	56	46	71	52	54	57
L64264-5	56	56	50	70	55	58	58
L64264-6	60	62	56	75	60	63	63
L64264-7	55	54	49	67	55	56	58
WG143157-1	31 *	43	41	69	44	48	46
WG143157-2	63	46	45	73	48	53	54
WG143157-3	57	58	53	68	58	62	62
WG143157-4	61	63	53	71	62	66	66
WG143157-5	91	100	38	150	53	63	64
WG143157-6	63	106	47	146	75	95	77
WG143157-7	64	56	45	78	50	51	53

Workgroup: WG143170 PCBs

Sample	Project	Project Description	List Type	Matrix	Collect Date	Prep Date	Anal Date	QC Association	Comments
L64264-1	423368-210-1	CSO Sediment Quality Cha	ORPCB-DOE-FW	FRSHWTRSED	10/14/2015 7:54	11/25/2015 8:00	12/15/2015 11:19	WG143170-1,-2,-3,-4,-5	
L64264-2	423368-210-1	CSO Sediment Quality Cha	ORPCB-DOE-FW	FRSHWTRSED	10/14/2015 8:30	11/25/2015 8:00	12/15/2015 11:35		
L64264-3	423368-210-1	CSO Sediment Quality Cha	ORPCB-DOE-FW	FRSHWTRSED	10/14/2015 8:58	11/25/2015 8:00	12/15/2015 11:50		
L64264-4	423368-210-1	CSO Sediment Quality Cha	ORPCB-DOE-FW	FRSHWTRSED	10/14/2015 8:07	11/25/2015 8:00	12/15/2015 12:06		
L64264-5	423368-210-1	CSO Sediment Quality Cha	ORPCB-DOE-FW	FRSHWTRSED	10/14/2015 9:11	11/25/2015 8:00	12/15/2015 12:21		
L64264-6	423368-210-1	CSO Sediment Quality Cha	ORPCB-DOE-FW	FRSHWTRSED	10/14/2015 9:41	11/25/2015 8:00	12/15/2015 12:36		
L64264-7	423368-210-1	CSO Sediment Quality Cha	ORPCB-DOE-FW	FRSHWTRSED	10/14/2015 8:16	11/25/2015 8:00	12/15/2015 12:52		
WG143170-1	MB		ORPCB-DOE-FW	OTHR SOLID		11/25/2015 8:00	12/15/2015 9:59		MB151125
WG143170-2	SB		ORPCB-DOE-FW	OTHR SOLID		11/25/2015 8:00	12/15/2015 10:16		WG143170-1
WG143170-3	MS		ORPCB-DOE-FW	FRSHWTRSED		11/25/2015 8:00	12/15/2015 10:33		L64264-3
WG143170-4	MSD		ORPCB-DOE-FW	FRSHWTRSED		11/25/2015 8:00	12/15/2015 10:49		WG143170-3 L64264-3
WG143170-5	LD		ORPCB-DOE-FW	FRSHWTRSED		11/25/2015 8:00	12/15/2015 11:04		L64264-6

Workgroup: WG143170 PCBs

MB:WG143170-1 Matrix: OTHR SOLID Listtype:ORPCB-DOE-FW Method:SW846 3550B*SW846 8082A Project: Pkey:STD
(Method Blank)

Parameter	MDL	RDL	Units	MB Value	Qual
Aroclor 1016	4	16	ug/Kg	<MDL	
Aroclor 1232	12	16	ug/Kg	<MDL	
Aroclor 1221	12	16	ug/Kg	<MDL	
Aroclor 1242	4	16	ug/Kg	<MDL	
Aroclor 1248	4	16	ug/Kg	<MDL	
Aroclor 1254	3.2	16	ug/Kg	<MDL	
Aroclor 1260	4	16	ug/Kg	<MDL	
Aroclor 1268	4	16	ug/Kg	<MDL	

SB:WG143170-2 MB:WG143170-1 Matrix: OTHR SOLID Listtype:ORPCB-DOE-FW Method:SW846 3550B*SW846 8082A Project: Pkey:STD
(Spike Blank, Method Blank)

Parameter	MDL	RDL	Units	MB Value	True Value	SB Value	% Rec.	Qual	Lab Limit
Aroclor 1242	4	16	ug/Kg	<MDL	160	51.6	32	*	38--100
Aroclor 1260	4	16	ug/Kg	<MDL	160	137	85		70--109

MSD:WG143170-4 MS:WG143170-3 L64264-3 Matrix: FRSHWTRSED Listtype:ORPCB-DOE-FW Method:SW846 3550B*SW846 8082A Project:423368-210-1 Pkey:SED
(Matrix Spike Duplicate, Matrix Spike)

				SAMP						MSD				
Parameter	MDL	RDL	Units	Value	True Value	MS Value	% Rec.	Qual	Lab Limit	True Value	Value	% Rec.	Qual	RPD	Qual	Lab Limit
Aroclor 1242	4	16	ug/Kg	7.9	160	124	73		51--100	160	137	81		10		0--35
Aroclor 1260	4	16	ug/Kg	27.4	160	154	79		35--108	160	163	84		5		0--35

LD:WG143170-5 L64264-6 Matrix: FRSHWTRSED Listtype:ORPCB-DOE-FW Method:SW846 3550B*SW846 8082A Project:423368-210-1 Pkey:SED
(Lab Duplicate)

Parameter	MDL	RDL	Units	SAMP Value	LD Value	RPD	Qual	Lab Limit
Aroclor 1016	4	16	ug/Kg	<MDL	<MDL			0--35
Aroclor 1232	12	16	ug/Kg	<MDL	<MDL			0--35
Aroclor 1221	12	16	ug/Kg	<MDL	<MDL			0--35
Aroclor 1242	4	16	ug/Kg	5.8	4.5			0--35
Aroclor 1248	4	16	ug/Kg	<MDL	<MDL			0--35
Aroclor 1254	3.2	16	ug/Kg	149	61.1	84	*	0--35
Aroclor 1260	4	16	ug/Kg	42.9	26	49	*	0--35
Aroclor 1268	4	16	ug/Kg	<MDL	<MDL			0--35

Surrogate: (Lab Limits)	2,4,5,6-Tetra chloro m-xylene 22--113	Decachlor o biphenyl 51--115
L64264-1	88	98
L64264-2	79	82
L64264-3	72	69
L64264-4	97	80
L64264-5	81	89
L64264-6	89	83
L64264-7	85	90
WG143170-1	26	77
WG143170-2	23	91
WG143170-3	84	89
WG143170-4	89	90
WG143170-5	78	80

==========

4xRule indicates no MS/MSD recovery was calculated due to the 4x rule.

SAP MDL Comparison Table

SAP MDL Comparison, Wet Weight

	Sample:	L63934-1	L63934-2	L63934-3	L63934-4	L63934-5	L63934-6	L63934-7	Conventionals and Metals.
	Sample:	L64264-1	L64264-2	L64264-3	L64264-4	L64264-5	L64264-6	L64264-7	Organics
	Locator:	CSO-BL-1	CSO-BL-2	CSO-BL-3	CSO-BL-4	CSO-BL-5	CSO-BL-6	CSO-BL-7	
WET Weight Basis		17.9	22	29.3	29.8	18	31.8	17.8	Conventionals and Metals.
WET Weight Basis		40.9	44.2	55.2	39.9	48.7	55.4	33.4	Organics
Parameters	SAP MDL	MDL	MDL	MDL	MDL	MDL	MDL	MDL	
CV ASTM D422									
Fines	NA	2.9	2.5	1.7	1.9	2.9	1.6	3.4	
Gravel	0.1	0.6	0.5	0.4	0.4	0.6	0.3	0.7	
Sand	0.1	0.6	0.5	0.4	0.4	0.6	0.3	0.7	
Silt	0.5	2.9	2.5	1.7	1.9	2.9	1.6	3.4	
Clay	0.5	2.9	2.5	1.7	1.9	2.9	1.6	3.4	
p+0.00	0.1	0.6	0.5	0.4	0.4	0.6	0.3	0.7	
p+1.00	0.1	0.6	0.5	0.4	0.4	0.6	0.3	0.7	
p+10.0(equal/more than)	0.5	2.9	2.5	1.7	1.9	2.9	1.6	3.4	
p+2.00	0.1	0.6	0.5	0.4	0.4	0.6	0.3	0.7	
p+3.00	0.1	0.6	0.5	0.4	0.4	0.6	0.3	0.7	
p+4.00	0.1	0.6	0.5	0.4	0.4	0.6	0.3	0.7	
p+5.00	0.5	2.9	2.5	1.7	1.9	2.9	1.6	3.4	
p+6.00	0.5	2.9	2.5	1.7	1.9	2.9	1.6	3.4	
p+7.00	0.5	2.9	2.5	1.7	1.9	2.9	1.6	3.4	
p+8.00	0.5	2.9	2.5	1.7	1.9	2.9	1.6	3.4	
p+9.00	0.5	2.9	2.5	1.7	1.9	2.9	1.6	3.4	
p-1.00	0.1	0.6	0.5	0.4	0.4	0.6	0.3	0.7	
p-2.00	0.1	0.6	0.5	0.4	0.4	0.6	0.3	0.7	
p-2.00(less than)	0.1	0.6	0.5	0.4	0.4	0.6	0.3	0.7	
CV SM2540-G									
Total Solids	0.005	0.005	0.005	0.005	0.005	0.005	0.005	0.005	Conventionals and Metals.
CV SM2540-G									
Total Solids	0.005	0.005	0.005	0.005	0.005	0.005	0.005	0.005	Organics
CV SW846 9060-PSEP96									
Total Organic Carbon	500	2700	3100	3300	4200	3100	4400	2600	
MT SW846 3050B*SW846 6020C									
Antimony, Total, ICP-MS	0.075	0.01	0.01	0.01	0.01	0.01	0.01	0.0092	
Arsenic, Total, ICP-MS	0.025	0.025	0.025	0.026	0.026	0.025	0.024	0.025	
Cadmium, Total, ICP-MS	0.0125	0.013	0.013	0.013	0.013	0.012	0.012	0.012	
Chromium, Total, ICP-MS	0.05	0.051	0.05	0.052	0.051	0.05	0.049	0.05	
Copper, Total, ICP-MS	0.1	0.051	0.05	0.052	0.051	0.05	0.049	0.05	
Lead, Total, ICP-MS	0.025	0.025	0.025	0.026	0.026	0.025	0.024	0.025	
Nickel, Total, ICP-MS	0.025	0.025	0.025	0.026	0.026	0.025	0.024	0.025	
Silver, Total, ICP-MS	0.01	0.01	0.01	0.01	0.01	0.01	0.0097	0.0099	
Zinc, Total, ICP-MS	0.125	0.13	0.13	0.13	0.13	0.12	0.12	0.12	
MT SW846 7471B									
Mercury, Total, CVAA	0.005	0.005	0.0051	0.0049	0.0051	0.0051	0.005	0.0048	
OR SW846 3550B*SW846 8270D									
1,2,4-Trichlorobenzene	0.53	3.3	3.3	3.3	3.3	3.3	3.3	3.3	
1,2-Dichlorobenzene	5.33	33.3	33.3	33.3	33.3	33.3	33.3	33.3	
1,4-Dichlorobenzene	8	50	50	50	50	50	50	50	
2,4-Dimethylphenol	5.3	33	33	33	33	33	33	33	
2-Methylnaphthalene	5.3	33	33	33	33	33	33	33	
2-Methylphenol	5.3	33	33	33	33	33	33	33	

SAP MDL Comparison, Wet Weight

	Sample:	L63934-1	L63934-2	L63934-3	L63934-4	L63934-5	L63934-6	L63934-7	Conventionals and Metals.
	Sample:	L64264-1	L64264-2	L64264-3	L64264-4	L64264-5	L64264-6	L64264-7	Organics
	Locator:	CSO-BL-1	CSO-BL-2	CSO-BL-3	CSO-BL-4	CSO-BL-5	CSO-BL-6	CSO-BL-7	
WET Weight Basis		17.9	22	29.3	29.8	18	31.8	17.8	Conventionals and Metals.
WET Weight Basis		40.9	44.2	55.2	39.9	48.7	55.4	33.4	Organics
Parameters	SAP MDL	MDL	MDL	MDL	MDL	MDL	MDL	MDL	
3-,4-Methylphenol	27	170	170	170	170	170	170	170	
Acenaphthene	5.3	33	33	33	33	33	33	33	
Acenaphthylene	5.3	33	33	33	33	33	33	33	
Anthracene	5.3	33	33	33	33	33	33	33	
Benzo(a)anthracene	5.3	33	33	33	33	33	33	33	
Benzo(a)pyrene	5.3	33	33	33	33	33	33	33	
Benzo(b,j,k)fluoranthene	5.3	33	33	33	33	33	33	33	
Benzo(g,h,i)perylene	5.3	33	33	33	33	33	33	33	
Benzoic Acid	107	667	667	667	667	667	667	667	
Benzyl Alcohol	13.3	83.3	83.3	83.3	83.3	83.3	83.3	83.3	
Benzyl Butyl Phthalate	8	50	50	50	50	50	50	50	
Bis(2-Ethylhexyl)Phthalate	11	67	67	67	67	67	67	67	
Chrysene	5.3	33	33	33	33	33	33	33	
Dibenzo(a,h)anthracene	5.3	33	33	33	33	33	33	33	
Dibenzofuran	5.3	33	33	33	33	33	33	33	
Diethyl Phthalate	11	67	67	67	67	67	67	67	
Dimethyl Phthalate	10.7	66.7	66.7	66.7	66.7	66.7	66.7	66.7	
Di-N-Butyl Phthalate	11	67	67	67	67	67	67	67	
Di-N-Octyl Phthalate	10.7	66.7	66.7	66.7	66.7	66.7	66.7	66.7	
Fluoranthene	5.3	33	33	33	33	33	33	33	
Fluorene	5.3	33	33	33	33	33	33	33	
Hexachlorobenzene	0.53	3.3	3.3	3.3	3.3	3.3	3.3	3.3	
Hexachlorobutadiene	2.7	17	17	17	17	17	17	17	
Indeno(1,2,3-Cd)Pyrene	5.3	33	33	33	33	33	33	33	
Naphthalene	5.3	33	33	33	33	33	33	33	
N-Nitrosodiphenylamine	13.3	83.3	83.3	83.3	83.3	83.3	83.3	83.3	
Pentachlorophenol	80	500	500	500	500	500	500	500	
Phenanthrene	5.3	33	33	33	33	33	33	33	
Phenol	27	170	170	170	170	170	170	170	
Pyrene	5.3	33	33	33	33	33	33	33	
OR SW846 3550B*SW846 8082A									
Aroclor 1016	4	4	4	4	4	4	4	4	
Aroclor 1221	12	12	12	12	12	12	12	12	
Aroclor 1232	12	12	12	12	12	12	12	12	
Aroclor 1242	4	4	4	4	4	4	4	4	
Aroclor 1248	4	4	4	4	4	4	4	4	
Aroclor 1254	4	3.2	3.2	3.2	3.2	3.2	3.2	3.2	
Aroclor 1260	4	4	4	4	4	4	4	4	

SAP & SMS OC and Dry Weight Normalization MDL Check Tables

SMS SQS Dry Weight Normalization Detection Limit Check, Freshwater Sediments

		Sample	L63934-1		L63934-2	
	Units	SQS Value	Result	RDL	Result	RDL
Ammonia	mg/Kg, dw	230				
Total sulfides	mg/Kg, dw	39				
Arsenic	mg/Kg, dw	14	18.88	0.71	21.09	0.57
Cadmium	mg/Kg, dw	2.1	3.25	0.35	1.09	0.29
Chromium	mg/Kg, dw	72	69.27	1.42	53.64	1.15
Copper	mg/Kg, dw	400	480.45	2.84	403.64	2.29
Lead	mg/Kg, dw	360	325.14	0.71	143.64	0.57
Mercury	mg/Kg, dw	0.66	1.44	0.28	0.54	0.23
Nickel	mg/Kg, dw	26	49.72	0.71	45.91	0.57
Selenium	mg/Kg, dw	11				
Silver	mg/Kg, dw	0.57	1.09	0.28	0.75	0.23
Zinc	mg/Kg, dw	3200	977.65	3.55	568.18	2.86
3-,4-Methylphenol	ug/Kg, dw	260				
Benzoic acid	ug/Kg, dw	2900				
Beta-Hexachlorocyclohexane	ug/Kg, dw	7.2				
Bis(2-ethylhexyl) phthalate	ug/Kg, dw	500				
Carbazole	ug/Kg, dw	900				
Dibenzofuran	ug/Kg, dw	200				
Dibutyltin	ug/Kg, dw	910				
Dieldrin	ug/Kg, dw	4.9				
Di-n-butyl phthalate	ug/Kg, dw	380				
Di-n-octyl phthalate	ug/Kg, dw	39				
Endrin Ketone	ug/Kg, dw	8.5				
Monobutyltin	ug/Kg, dw	540				
Pentachlorophenol	ug/Kg, dw	1200				
Phenol	ug/Kg, dw	120				
Tributyltin	ug/Kg, dw	47				
Tetrabutyltin	ug/Kg, dw	97				
Total Petroleum Hydrocarbon (TPH)-Diesel	mg/Kg, dw	340				
Total Petroleum Hydrocarbon (TPH)-Residual	mg/Kg, dw	3600				
Total Solids				17.9		22
Total DDDs	ug/Kg, dw	310				
Total DDEs	ug/Kg, dw	21				
Total DDTs	ug/Kg, dw	100				
Total PAHs	ug/Kg, dw	17000				
Total PCB Aroclors	ug/Kg, dw	110				

SMS SQS Dry Weight Normalization Detection Limit Check, Freshwater Sediments

		Sample	L63934-3		L63934-4	
	Units	SQS Value	Result	RDL	Result	RDL
Ammonia	mg/Kg, dw	230				
Total sulfides	mg/Kg, dw	39				
Arsenic	mg/Kg, dw	14	20.17	0.44	6.41	0.43
Cadmium	mg/Kg, dw	2.1	1.39	0.22	0.82	0.22
Chromium	mg/Kg, dw	72	63.48	0.88	21.78	0.86
Copper	mg/Kg, dw	400	477.82	1.77	116.44	1.73
Lead	mg/Kg, dw	360	272.35	0.44	101.68	0.43
Mercury	mg/Kg, dw	0.66	0.62	0.17	0.16	0.17
Nickel	mg/Kg, dw	26	52.56	0.44	18.49	0.43
Selenium	mg/Kg, dw	11				
Silver	mg/Kg, dw	0.57	0.80	0.18	0.19	0.17
Zinc	mg/Kg, dw	3200	491.47	2.21	466.44	2.16
3-,4-Methylphenol	ug/Kg, dw	260				
Benzoic acid	ug/Kg, dw	2900				
Beta-Hexachlorocyclohexane	ug/Kg, dw	7.2				
Bis(2-ethylhexyl) phthalate	ug/Kg, dw	500				
Carbazole	ug/Kg, dw	900				
Dibenzofuran	ug/Kg, dw	200				
Dibutyltin	ug/Kg, dw	910				
Dieldrin	ug/Kg, dw	4.9				
Di-n-butyl phthalate	ug/Kg, dw	380				
Di-n-octyl phthalate	ug/Kg, dw	39				
Endrin Ketone	ug/Kg, dw	8.5				
Monobutyltin	ug/Kg, dw	540				
Pentachlorophenol	ug/Kg, dw	1200				
Phenol	ug/Kg, dw	120				
Tributyltin	ug/Kg, dw	47				
Tetrabutyltin	ug/Kg, dw	97				
Total Petroleum Hydrocarbon (TPH)-Diesel	mg/Kg, dw	340				
Total Petroleum Hydrocarbon (TPH)-Residual	mg/Kg, dw	3600				
Total Solids				29.3		29.8
Total DDDs	ug/Kg, dw	310				
Total DDEs	ug/Kg, dw	21				
Total DDTs	ug/Kg, dw	100				
Total PAHs	ug/Kg, dw	17000				
Total PCB Aroclors	ug/Kg, dw	110				

SMS SQS Dry Weight Normalization Detection Limit Check, Freshwater Sediments

		Sample	L63934-5		L63934-6	
	Units	SQS Value	Result	RDL	Result	RDL
Ammonia	mg/Kg, dw	230				
Total sulfides	mg/Kg, dw	39				
Arsenic	mg/Kg, dw	14	24.89	0.69	22.23	0.38
Cadmium	mg/Kg, dw	2.1	1.91	0.35	1.06	0.19
Chromium	mg/Kg, dw	72	63.89	1.38	55.35	0.76
Copper	mg/Kg, dw	400	493.89	2.77	288.36	1.53
Lead	mg/Kg, dw	360	231.11	0.69	159.75	0.38
Mercury	mg/Kg, dw	0.66	0.63	0.28	0.67	0.16
Nickel	mg/Kg, dw	26	49.67	0.69	43.40	0.38
Selenium	mg/Kg, dw	11				
Silver	mg/Kg, dw	0.57	0.93	0.28	0.87	0.15
Zinc	mg/Kg, dw	3200	722.22	3.46	389.94	1.91
3-,4-Methylphenol	ug/Kg, dw	260				
Benzoic acid	ug/Kg, dw	2900				
Beta-Hexachlorocyclohexane	ug/Kg, dw	7.2				
Bis(2-ethylhexyl) phthalate	ug/Kg, dw	500				
Carbazole	ug/Kg, dw	900				
Dibenzofuran	ug/Kg, dw	200				
Dibutyltin	ug/Kg, dw	910				
Dieldrin	ug/Kg, dw	4.9				
Di-n-butyl phthalate	ug/Kg, dw	380				
Di-n-octyl phthalate	ug/Kg, dw	39				
Endrin Ketone	ug/Kg, dw	8.5				
Monobutyltin	ug/Kg, dw	540				
Pentachlorophenol	ug/Kg, dw	1200				
Phenol	ug/Kg, dw	120				
Tributyltin	ug/Kg, dw	47				
Tetrabutyltin	ug/Kg, dw	97				
Total Petroleum Hydrocarbon (TPH)-Diesel	mg/Kg, dw	340				
Total Petroleum Hydrocarbon (TPH)-Residual	mg/Kg, dw	3600				
Total Solids				18		31.8
Total DDDs	ug/Kg, dw	310				
Total DDEs	ug/Kg, dw	21				
Total DDTs	ug/Kg, dw	100				
Total PAHs	ug/Kg, dw	17000				
Total PCB Aroclors	ug/Kg, dw	110				

SMS SQS Dry Weight Normalization Detection Limit Check, Freshwater Sediments

		Sample	L63934-7		L64264-1	
	Units	SQS Value	Result	RDL	Result	RDL
Ammonia	mg/Kg, dw	230				
Total sulfides	mg/Kg, dw	39				
Arsenic	mg/Kg, dw	14	17.19	0.70		
Cadmium	mg/Kg, dw	2.1	1.58	0.35		
Chromium	mg/Kg, dw	72	48.82	1.39		
Copper	mg/Kg, dw	400	296.07	2.79		
Lead	mg/Kg, dw	360	173.03	0.70		
Mercury	mg/Kg, dw	0.66	0.41	0.27		
Nickel	mg/Kg, dw	26	37.13	0.70		
Selenium	mg/Kg, dw	11				
Silver	mg/Kg, dw	0.57	0.67	0.28		
Zinc	mg/Kg, dw	3200	792.13	3.49		
3-,4-Methylphenol	ug/Kg, dw	260			0.00	814.18
Benzoic acid	ug/Kg, dw	2900			0.00	1630.81
Beta-Hexachlorocyclohexane	ug/Kg, dw	7.2				
Bis(2-ethylhexyl) phthalate	ug/Kg, dw	500			25672.37	325.18
Carbazole	ug/Kg, dw	900			168.70	163.08
Dibenzofuran	ug/Kg, dw	200			0.00	163.08
Dibutyltin	ug/Kg, dw	910				
Dieldrin	ug/Kg, dw	4.9				
Di-n-butyl phthalate	ug/Kg, dw	380			166.26	325.18
Di-n-octyl phthalate	ug/Kg, dw	39			882.64	163.08
Endrin Ketone	ug/Kg, dw	8.5				
Monobutyltin	ug/Kg, dw	540				
Pentachlorophenol	ug/Kg, dw	1200			0.00	1222.49
Phenol	ug/Kg, dw	120			0.00	1222.49
Tributyltin	ug/Kg, dw	47				
Tetrabutyltin	ug/Kg, dw	97				
Total Petroleum Hydrocarbon (TPH)-Diesel	mg/Kg, dw	340				
Total Petroleum Hydrocarbon (TPH)-Residual	mg/Kg, dw	3600				
Total Solids				17.8		40.9
Total DDDs	ug/Kg, dw	310				
Total DDEs	ug/Kg, dw	21				
Total DDTs	ug/Kg, dw	100				
Total PAHs	ug/Kg, dw	17000			22819.56	80.68
Total PCB Aroclors	ug/Kg, dw	110			202.44	7.82

SMS SQS Dry Weight Normalization Detection Limit Check, Freshwater Sediments

		Sample	L64264-2		L64264-3	
	Units	SQS Value	Result	RDL	Result	RDL
Ammonia	mg/Kg, dw	230				
Total sulfides	mg/Kg, dw	39				
Arsenic	mg/Kg, dw	14				
Cadmium	mg/Kg, dw	2.1				
Chromium	mg/Kg, dw	72				
Copper	mg/Kg, dw	400				
Lead	mg/Kg, dw	360				
Mercury	mg/Kg, dw	0.66				
Nickel	mg/Kg, dw	26				
Selenium	mg/Kg, dw	11				
Silver	mg/Kg, dw	0.57				
Zinc	mg/Kg, dw	3200				
3-,4-Methylphenol	ug/Kg, dw	260	0.00	753.39	0.00	603.26
Benzoic acid	ug/Kg, dw	2900	0.00	1509.05	0.00	1208.33
Beta-Hexachlorocyclohexane	ug/Kg, dw	7.2				
Bis(2-ethylhexyl) phthalate	ug/Kg, dw	500	4321.27	300.90	5307.97	240.94
Carbazole	ug/Kg, dw	900	0.00	150.90	166.30	120.83
Dibenzofuran	ug/Kg, dw	200	0.00	150.90	72.46	120.83
Dibutyltin	ug/Kg, dw	910				
Dieldrin	ug/Kg, dw	4.9				
Di-n-butyl phthalate	ug/Kg, dw	380	0.00	300.90	0.00	240.94
Di-n-octyl phthalate	ug/Kg, dw	39	0.00	150.90	0.00	120.83
Endrin Ketone	ug/Kg, dw	8.5				
Monobutyltin	ug/Kg, dw	540				
Pentachlorophenol	ug/Kg, dw	1200	0.00	1131.22	0.00	905.80
Phenol	ug/Kg, dw	120	0.00	1131.22	0.00	905.80
Tributyltin	ug/Kg, dw	47				
Tetrabutyltin	ug/Kg, dw	97				
Total Petroleum Hydrocarbon (TPH)-Diesel	mg/Kg, dw	340				
Total Petroleum Hydrocarbon (TPH)-Residual	mg/Kg, dw	3600				
Total Solids				44.2		55.2
Total DDDs	ug/Kg, dw	310				
Total DDEs	ug/Kg, dw	21				
Total DDTs	ug/Kg, dw	100				
Total PAHs	ug/Kg, dw	17000	10646.61	74.66	26050.72	59.78
Total PCB Aroclors	ug/Kg, dw	110	136.43	7.24	176.09	5.80

SMS SQS Dry Weight Normalization Detection Limit Check, Freshwater Sediments

		Sample	L64264-4		L64264-5	
	Units	SQS Value	Result	RDL	Result	RDL
Ammonia	mg/Kg, dw	230				
Total sulfides	mg/Kg, dw	39				
Arsenic	mg/Kg, dw	14				
Cadmium	mg/Kg, dw	2.1				
Chromium	mg/Kg, dw	72				
Copper	mg/Kg, dw	400				
Lead	mg/Kg, dw	360				
Mercury	mg/Kg, dw	0.66				
Nickel	mg/Kg, dw	26				
Selenium	mg/Kg, dw	11				
Silver	mg/Kg, dw	0.57				
Zinc	mg/Kg, dw	3200				
3-,4-Methylphenol	ug/Kg, dw	260	0.00	834.59	0.00	683.78
Benzoic acid	ug/Kg, dw	2900	0.00	1671.68	0.00	1369.61
Beta-Hexachlorocyclohexane	ug/Kg, dw	7.2				
Bis(2-ethylhexyl) phthalate	ug/Kg, dw	500	12355.89	333.33	7371.66	273.10
Carbazole	ug/Kg, dw	900	295.74	167.17	84.19	136.96
Dibenzofuran	ug/Kg, dw	200	0.00	167.17	0.00	136.96
Dibutyltin	ug/Kg, dw	910				
Dieldrin	ug/Kg, dw	4.9				
Di-n-butyl phthalate	ug/Kg, dw	380	0.00	333.33	0.00	273.10
Di-n-octyl phthalate	ug/Kg, dw	39	879.70	167.17	0.00	136.96
Endrin Ketone	ug/Kg, dw	8.5				
Monobutyltin	ug/Kg, dw	540				
Pentachlorophenol	ug/Kg, dw	1200	0.00	1253.13	0.00	1026.69
Phenol	ug/Kg, dw	120	0.00	1253.13	0.00	1026.69
Tributyltin	ug/Kg, dw	47				
Tetrabutyltin	ug/Kg, dw	97				
Total Petroleum Hydrocarbon (TPH)-Diesel	mg/Kg, dw	340				
Total Petroleum Hydrocarbon (TPH)-Residual	mg/Kg, dw	3600				
Total Solids				39.9		48.7
Total DDDs	ug/Kg, dw	310				
Total DDEs	ug/Kg, dw	21				
Total DDTs	ug/Kg, dw	100				
Total PAHs	ug/Kg, dw	17000	22138.10	82.71	13726.49	67.76
Total PCB Aroclors	ug/Kg, dw	110	76.94	8.02	155.03	6.57

SMS SQS Dry Weight Normalization Detection Limit Check, Freshwater Sediments

		Sample	L64264-6		L64264-7	
	Units	SQS Value	Result	RDL	Result	RDL
Ammonia	mg/Kg, dw	230				
Total sulfides	mg/Kg, dw	39				
Arsenic	mg/Kg, dw	14				
Cadmium	mg/Kg, dw	2.1				
Chromium	mg/Kg, dw	72				
Copper	mg/Kg, dw	400				
Lead	mg/Kg, dw	360				
Mercury	mg/Kg, dw	0.66				
Nickel	mg/Kg, dw	26				
Selenium	mg/Kg, dw	11				
Silver	mg/Kg, dw	0.57				
Zinc	mg/Kg, dw	3200				
3-,4-Methylphenol	ug/Kg, dw	260	0.00	601.08	0.00	997.01
Benzoic acid	ug/Kg, dw	2900	0.00	1203.97	0.00	1997.01
Beta-Hexachlorocyclohexane	ug/Kg, dw	7.2				
Bis(2-ethylhexyl) phthalate	ug/Kg, dw	500	3339.35	240.07	16556.89	398.20
Carbazole	ug/Kg, dw	900	88.45	120.40	179.64	199.70
Dibenzofuran	ug/Kg, dw	200	0.00	120.40	0.00	199.70
Dibutyltin	ug/Kg, dw	910				
Dieldrin	ug/Kg, dw	4.9				
Di-n-butyl phthalate	ug/Kg, dw	380	0.00	240.07	236.53	398.20
Di-n-octyl phthalate	ug/Kg, dw	39	0.00	120.40	0.00	199.70
Endrin Ketone	ug/Kg, dw	8.5				
Monobutyltin	ug/Kg, dw	540				
Pentachlorophenol	ug/Kg, dw	1200	0.00	902.53	0.00	1497.01
Phenol	ug/Kg, dw	120	0.00	902.53	0.00	1497.01
Tributyltin	ug/Kg, dw	47				
Tetrabutyltin	ug/Kg, dw	97				
Total Petroleum Hydrocarbon (TPH)-Diesel	mg/Kg, dw	340				
Total Petroleum Hydrocarbon (TPH)-Residual	mg/Kg, dw	3600				
Total Solids				55.4		33.4
Total DDDs	ug/Kg, dw	310				
Total DDEs	ug/Kg, dw	21				
Total DDTs	ug/Kg, dw	100				
Total PAHs	ug/Kg, dw	17000	13657.40	59.57	17113.77	98.80
Total PCB Aroclors	ug/Kg, dw	110	356.86	5.78	133.83	9.58

Appendix C

Complete Sediment Chemistry Analytical Results

	Project:	423368-210-1				Project:	423368-210-1				Project:	423368-210-1				Project:	423368-210-1				
	Locator:	CSO-BL-1				Locator:	CSO-BL-2				Locator:	CSO-BL-3				Locator:	CSO-BL-4				
	Descrip:	BALLARD CSO				Descrip:	BALLARD CSO				Descrip:	BALLARD CSO				Descrip:	BALLARD CSO				
	Sample:	L63934-1				Sample:	L63934-2				Sample:	L63934-3				Sample:	L63934-4				
	Matrix:	SE FRSHWTRSED				Matrix:	SE FRSHWTRSED				Matrix:	SE FRSHWTRSED				Matrix:	SE FRSHWTRSED				
	ColDate:	10/14/15 7:54				ColDate:	10/14/15 8:30				ColDate:	10/14/15 8:58				ColDate:	10/14/15 8:07				
	TotalSolid:	17.9				TotalSolid:	22				TotalSolid:	29.3				TotalSolid:	29.8				
	DRY Weight Basis					**DRY Weight Basis**					**DRY Weight Basis**					**DRY Weight Basis**					
Parameters	**Value**	**Qual**	**MDL**	**RDL**	**Units**	**Value**	**Qual**	**MDL**	**RDL**	**Units**	**Value**	**Qual**	**MDL**	**RDL**	**Units**	**Value**	**Qual**	**MDL**	**RDL**	**Units**
CV ASTM D422																					
Fines*	77.8		2.9	5.8	%	71.8		2.5	5	%	55.2		1.7	3.5	%	11.2		1.9	3.8	%
Gravel*		<MDL	0.6	5.8	%		<MDL	0.5	5	%	0.4	<RDL	0.4	3.5	%	10.2		0.4	3.8	%
Sand*	12.8		0.6	5.8	%	21.6		0.5	5	%	40.8		0.4	3.5	%	69		0.4	3.8	%
Silt*	74.9		2.9	5.8	%	66.9		2.5	5	%	51.8		1.7	3.5	%	11.2		1.9	3.8	%
Clay*	2.9	<RDL	2.9	5.8	%	5	RDL	2.5	5	%	3.5	RDL	1.7	3.5	%		<MDL	1.9	3.75	%
p+0.00*		<MDL	0.6	5.8	%	0.6	<RDL	0.5	5	%	0.7	<RDL	0.4	3.5	%	4.8		0.4	3.8	%
p+1.00*	0.9	<RDL	0.6	5.8	%	2.1	<RDL	0.5	5	%	3.1	<RDL	0.4	3.5	%	4.8		0.4	3.8	%
p+10.0(equal/more than)*		<MDL	2.9	5.8	%	2.5	<RDL	2.5	5	%	3.5	RDL	1.7	3.5	%		<MDL	1.9	3.8	%
p+2.00*	1.3	<RDL	0.6	5.8	%	1.5	<RDL	0.5	5	%	10.2		0.4	3.5	%	22.8		0.4	3.8	%
p+3.00*	2.5	<RDL	0.6	5.8	%	4.5	<RDL	0.5	5	%	14.8		0.4	3.5	%	29.5		0.4	3.8	%
p+4.00*	8.1		0.6	5.8	%	12.9		0.5	5	%	11.9		0.4	3.5	%	7.1		0.4	3.8	%
p+5.00*	43.2		2.9	5.8	%	29.7		2.5	5	%	24.2		1.7	3.5	%	7.5		1.9	3.8	%
p+6.00*	5.8	RDL	2.9	5.8	%	9.9		2.5	5	%	6.9		1.7	3.5	%	1.9	<RDL	1.9	3.8	%
p+7.00*	17.3		2.9	5.8	%	17.3		2.5	5	%	13.8		1.7	3.5	%		<MDL	1.9	3.8	%
p+8.00*	8.6		2.9	5.8	%	9.9		2.5	5	%	6.9		1.7	3.5	%	1.9	<RDL	1.9	3.8	%
p+9.00*	2.9	<RDL	2.9	5.8	%	2.5	<RDL	2.5	5	%		<MDL	1.7	3.5	%		<MDL	1.9	3.8	%
p-1.00*		<MDL	0.6	5.8	%		<MDL	0.5	5	%	0.4	<RDL	0.4	3.5	%	3.1	<RDL	0.4	3.8	%
p-2.00(less than)*		<MDL	0.6	5.8	%		<MDL	0.5	5	%		<MDL	0.4	3.5	%	6.7		0.4	3.8	%
p-2.00*		<MDL	0.6	5.8	%		<MDL	0.5	5	%		<MDL	0.4	3.5	%	0.4	<RDL	0.4	3.8	%
CV SM2540-G																					
Total Solids*	17.9		0.005	0.01	%	22		0.005	0.01	%	29.3		0.005	0.01	%	29.8		0.005	0.01	%
Total Solids*	40.9		0.005	0.01	%	44.2		0.005	0.01	%	55.2		0.005	0.01	%	39.9		0.005	0.01	%
CV SW846 9060 PSEP96																					
Total Organic Carbon	106000		15000	30100	mg/Kg	48200		14000	28100	mg/Kg	49500		11000	22600	mg/Kg	117000		14000	28300	mg/Kg
ES NONE																					
Field Personnel*	BK, CB				none	BK, CB				none	BK, CB				none	BK, CB				none
Sampcoordx1*	1258672				ft	1258469				ft	1258544				ft	1258596				ft
Sampcoordy1*	245923				ft	245999				ft	245927				ft	245871				ft
Sampling Method*	20132				none	20132				none	20132				none	20132				none
Sediment Sampling Depth*	17				cm	15				cm	17				cm	17				cm
Sediment Sampling Range*	10				cm	10				cm	10				cm	10				cm
Sediment Type*	20P17				none	32P10				none	23P12				none	32P17				none
MT SW846 3050B(MODSB)*SW846 6020A																					
Antimony, Total, ICP-MS	10	J	0.056	0.281	mg/Kg	4.29	J	0.045	0.229	mg/Kg	5.22	JG,J	0.034	0.17	mg/Kg	3.56	J	0.034	0.171	mg/Kg
Arsenic, Total, ICP-MS	18.9		0.14	0.709	mg/Kg	21.1		0.11	0.573	mg/Kg	20.2		0.089	0.44	mg/Kg	6.41		0.087	0.433	mg/Kg
Cadmium, Total, ICP-MS	3.25		0.073	0.355	mg/Kg	1.09		0.059	0.286	mg/Kg	1.39		0.044	0.221	mg/Kg	0.815		0.044	0.216	mg/Kg
Chromium, Total, ICP-MS	69.3		0.28	1.42	mg/Kg	53.6		0.23	1.15	mg/Kg	63.5		0.18	0.884	mg/Kg	21.8		0.17	0.862	mg/Kg
Copper, Total, ICP-MS	480		0.28	2.84	mg/Kg	404		0.23	2.29	mg/Kg	478		0.18	1.77	mg/Kg	116		0.17	1.73	mg/Kg
Lead, Total, ICP-MS	325		0.14	0.709	mg/Kg	144		0.11	0.573	mg/Kg	272		0.089	0.44	mg/Kg	102		0.087	0.433	mg/Kg
Nickel, Total, ICP-MS	49.7		0.14	0.709	mg/Kg	45.9		0.11	0.573	mg/Kg	52.6		0.089	0.44	mg/Kg	18.5		0.087	0.433	mg/Kg
Silver, Total, ICP-MS	1.09		0.056	0.284	mg/Kg	0.755		0.045	0.229	mg/Kg	0.802		0.034	0.177	mg/Kg	0.186		0.034	0.173	mg/Kg
Zinc, Total, ICP-MS	978		0.73	3.55	mg/Kg	568		0.59	2.86	mg/Kg	491		0.44	2.21	mg/Kg	466		0.44	2.16	mg/Kg
MT SW846 7471B																					
Mercury, Total, CVAA	1.44		0.028	0.277	mg/Kg	0.541		0.023	0.231	mg/Kg	0.618		0.017	0.169	mg/Kg	0.16	<RDL	0.017	0.17	mg/Kg
OR SW846 3550B*SW846 8082A																					
Aroclor 1016		<MDL	9.8	39.1	ug/Kg		<MDL	9	36.2	ug/Kg		<MDL	7.2	29	ug/Kg		<MDL	10	40.1	ug/Kg

	Project:	423368-210-1				Project:	423368-210-1				Project:	423368-210-1				Project:	423368-210-1				
	Locator:	CSO-BL-1				Locator:	CSO-BL-2				Locator:	CSO-BL-3				Locator:	CSO-BL-4				
	Descrip:	BALLARD CSO				Descrip:	BALLARD CSO				Descrip:	BALLARD CSO				Descrip:	BALLARD CSO				
	Sample:	L63934-1				Sample:	L63934-2				Sample:	L63934-3				Sample:	L63934-4				
	Matrix:	SE FRSHWTRSED				Matrix:	SE FRSHWTRSED				Matrix:	SE FRSHWTRSED				Matrix:	SE FRSHWTRSED				
	ColDate:	10/14/15 7:54				ColDate:	10/14/15 8:30				ColDate:	10/14/15 8:58				ColDate:	10/14/15 8:07				
	TotalSolid:	17.9				TotalSolid:	22				TotalSolid:	29.3				TotalSolid:	29.8				
	DRY Weight Basis					**DRY Weight Basis**					**DRY Weight Basis**					**DRY Weight Basis**					
Parameters	**Value**	**Qual**	**MDL**	**RDL**	**Units**	**Value**	**Qual**	**MDL**	**RDL**	**Units**	**Value**	**Qual**	**MDL**	**RDL**	**Units**	**Value**	**Qual**	**MDL**	**RDL**	**Units**
Aroclor 1221		<MDL	29	39.1	ug/Kg		<MDL	27	36.2	ug/Kg		<MDL	22	29	ug/Kg		<MDL	30	40.1	ug/Kg
Aroclor 1232		<MDL	29	39.1	ug/Kg		<MDL	27	36.2	ug/Kg		<MDL	22	29	ug/Kg		<MDL	30	40.1	ug/Kg
Aroclor 1242	14	<RDL,J	9.8	39.1	ug/Kg		<MDL,J	9	36.2	ug/Kg	14	<RDL,J	7.2	29	ug/Kg		<MDL,J	10	40.1	ug/Kg
Aroclor 1248		<MDL	9.8	39.1	ug/Kg		<MDL	9	36.2	ug/Kg		<MDL	7.2	29	ug/Kg		<MDL	10	40.1	ug/Kg
Aroclor 1254	122		7.8	39.1	ug/Kg	92.5		7.2	36.2	ug/Kg	112		5.8	29	ug/Kg	51.9		8	40.1	ug/Kg
Aroclor 1260	66.5		9.8	39.1	ug/Kg	43.9		9	36.2	ug/Kg	49.6		7.2	29	ug/Kg	25	<RDL	10	40.1	ug/Kg
Aroclor 1268	20	<RDL	9.8	39.1	ug/Kg		<MDL	9	36.2	ug/Kg		<MDL	7.2	29	ug/Kg		<MDL	10	40.1	ug/Kg
OR SW846 3550B*SW846 8270D																				
1,2,4-Trichlorobenzene		<MDL	8.1	16.3	ug/Kg		<MDL	7.5	15.1	ug/Kg		<MDL	6	12.1	ug/Kg		<MDL	8.3	16.7	ug/Kg
1,2-Dichlorobenzene		<MDL	81.4	81.4	ug/Kg		<MDL	75.3	75.3	ug/Kg		<MDL	60.3	60.3	ug/Kg		<MDL	83.5	83.5	ug/Kg
1,4-Dichlorobenzene		<MDL	122	122	ug/Kg		<MDL	113	113	ug/Kg		<MDL	90.6	90.6	ug/Kg		<MDL	125	125	ug/Kg
1-Methylnaphthalene		<MDL	81	163	ug/Kg		<MDL	75	151	ug/Kg		<MDL	60	121	ug/Kg		<MDL	83	167	ug/Kg
2,4-Dimethylphenol		<MDL	81	163	ug/Kg		<MDL	75	151	ug/Kg		<MDL	60	121	ug/Kg		<MDL	83	167	ug/Kg
2-Methylnaphthalene		<MDL	81	163	ug/Kg		<MDL	75	151	ug/Kg		<MDL	60	121	ug/Kg		<MDL	83	167	ug/Kg
2-Methylphenol		<MDL	81	163	ug/Kg		<MDL	75	151	ug/Kg		<MDL	60	121	ug/Kg		<MDL	83	167	ug/Kg
3-,4-Methylphenol		<MDL	420	814	ug/Kg		<MDL	380	753	ug/Kg		<MDL	310	603	ug/Kg		<MDL	430	835	ug/Kg
Acenaphthene	100	<RDL	81	163	ug/Kg		<MDL	75	151	ug/Kg	201		60	121	ug/Kg	95	<RDL	83	167	ug/Kg
Acenaphthylene	83	<RDL	81	163	ug/Kg		<MDL	75	151	ug/Kg	100	<RDL	60	121	ug/Kg		<MDL	83	167	ug/Kg
Anthracene	208		81	163	ug/Kg	178		75	151	ug/Kg	388		60	121	ug/Kg	444		83	167	ug/Kg
Benzo(a)anthracene	1350		81	163	ug/Kg	751		75	151	ug/Kg	1540		60	121	ug/Kg	1510		83	167	ug/Kg
Benzo(a)pyrene	1990		81	163	ug/Kg	889		75	151	ug/Kg	2050		60	121	ug/Kg	1850		83	167	ug/Kg
Benzo(b,j,k)fluoranthene	5840		81	163	ug/Kg	2100		75	151	ug/Kg	4730		60	121	ug/Kg	4460		83	167	ug/Kg
Benzo(g,h,i)perylene	733		81	163	ug/Kg	342		75	151	ug/Kg	587		60	121	ug/Kg	459		83	167	ug/Kg
Benzoic Acid		<MDL	1630	1630	ug/Kg		<MDL	1510	1510	ug/Kg		<MDL	1210	1210	ug/Kg		<MDL	1670	1670	ug/Kg
Benzyl Alcohol		<MDL	204	204	ug/Kg		<MDL	188	188	ug/Kg		<MDL	151	151	ug/Kg		<MDL	209	209	ug/Kg
Benzyl Butyl Phthalate	653		122	122	ug/Kg		<MDL	113	113	ug/Kg	313		90.6	90.6	ug/Kg	326		125	125	ug/Kg
Bis(2-Ethylhexyl)Phthalate	25700		160	325	ug/Kg	4320		150	301	ug/Kg	5310		120	241	ug/Kg	12400		170	333	ug/Kg
Carbazole	169		81	163	ug/Kg		<MDL	75	151	ug/Kg	166		60	121	ug/Kg	296		83	167	ug/Kg
Chrysene	2370		81	163	ug/Kg	1120		75	151	ug/Kg	2430		60	121	ug/Kg	2660		83	167	ug/Kg
Dibenzo(a,h)anthracene	207		81	163	ug/Kg	88	<RDL	75	151	ug/Kg	181		60	121	ug/Kg	160	<RDL	83	167	ug/Kg
Dibenzofuran		<MDL	81	163	ug/Kg		<MDL	75	151	ug/Kg	72	<RDL	60	121	ug/Kg		<MDL	83	167	ug/Kg
Diethyl Phthalate		<MDL	160	325	ug/Kg		<MDL	150	301	ug/Kg		<MDL	120	241	ug/Kg		<MDL	170	333	ug/Kg
Dimethyl Phthalate	274		163	163	ug/Kg	187		151	151	ug/Kg	457		121	121	ug/Kg		<MDL	167	167	ug/Kg
Di-N-Butyl Phthalate	170	<RDL	160	325	ug/Kg		<MDL	150	301	ug/Kg		<MDL	120	241	ug/Kg		<MDL	170	333	ug/Kg
Di-N-Octyl Phthalate	883		163	163	ug/Kg		<MDL	151	151	ug/Kg		<MDL	121	121	ug/Kg	880		167	167	ug/Kg
Fluoranthene	3500		81	163	ug/Kg	1880		75	151	ug/Kg	4860		60	121	ug/Kg	3580		83	167	ug/Kg
Fluorene	165		81	163	ug/Kg	120	<RDL	75	151	ug/Kg	344		60	121	ug/Kg	216		83	167	ug/Kg
Hexachlorobenzene		<MDL	8.1	16.3	ug/Kg		<MDL	7.5	15.1	ug/Kg		<MDL	6	12.1	ug/Kg		<MDL	8.3	16.7	ug/Kg
Hexachlorobutadiene		<MDL	42	81.4	ug/Kg		<MDL	38	75.3	ug/Kg		<MDL	31	60.3	ug/Kg		<MDL	43	83.5	ug/Kg
Indeno(1,2,3-Cd)Pyrene	941		81	163	ug/Kg	439		75	151	ug/Kg	842		60	121	ug/Kg	697		83	167	ug/Kg
Naphthalene		<MDL	81	163	ug/Kg		<MDL	75	151	ug/Kg	91	<RDL	60	121	ug/Kg		<MDL	83	167	ug/Kg
N-Nitrosodiphenylamine		<MDL	204	204	ug/Kg		<MDL	188	188	ug/Kg		<MDL	151	151	ug/Kg		<MDL	209	209	ug/Kg
Pentachlorophenol		<MDL	1220	1220	ug/Kg		<MDL	1130	1130	ug/Kg		<MDL	906	906	ug/Kg		<MDL	1250	1250	ug/Kg
Phenanthrene	1040		81	163	ug/Kg	550		75	151	ug/Kg	1900		60	121	ug/Kg	1770		83	167	ug/Kg
Phenol		<MDL	420	1220	ug/Kg		<MDL	380	1130	ug/Kg		<MDL	310	906	ug/Kg		<MDL	430	1250	ug/Kg
Pyrene	4280		81	163	ug/Kg	2180		75	151	ug/Kg	5820		60	121	ug/Kg	4240		83	167	ug/Kg

	Project:	423368-210-1				Project:	423368-210-1				Project:	423368-210-1				Project:	423368-210-1				
	Locator:	CSO-BL-5				Locator:	CSO-BL-6				Locator:	CSO-BL-7				Locator:	CSO-BL-1				
	Descrip:	BALLARD CSO				Descrip:	BALLARD CSO				Descrip:	BALLARD CSO				Descrip:	BALLARD CSO				
	Sample:	L63934-5				Sample:	L63934-6				Sample:	L63934-7				Sample:	L64264-1				
	Matrix:	SE FRSHWTRSED				Matrix:	SE FRSHWTRSED				Matrix:	SE FRSHWTRSED				Matrix:	SE FRSHWTRSED				
	ColDate:	10/14/15 9:11				ColDate:	10/14/15 9:41				ColDate:	10/14/15 8:16				ColDate:	10/14/15 7:54				
	TotalSolid:	18				TotalSolid:	31.8				TotalSolid:	17.8				TotalSolid:	40.9				
	DRY Weight Basis					**DRY Weight Basis**					**DRY Weight Basis**					**DRY Weight Basis**					
Parameters	**Value**	**Qual**	**MDL**	**RDL**	**Units**	**Value**	**Qual**	**MDL**	**RDL**	**Units**	**Value**	**Qual**	**MDL**	**RDL**	**Units**	**Value**	**Qual**	**MDL**	**RDL**	**Units**
CV ASTM D422																				
Fines*	80		2.9	5.7	%	51.6		1.6	3.1	%	74.7		3.4	6.8	%					
Gravel*		<MDL	0.6	5.7	%		<MDL	0.3	3.1	%	2.6	<RDL	0.7	6.8	%					
Sand*	12.9		0.6	5.7	%	43.6		0.3	3.1	%	22.5		0.7	6.8	%					
Silt*	71.4		2.9	5.7	%	46.9		1.6	3.1	%	74.7		3.4	6.8	%					
Clay*	8.6		2.9	5.7	%	4.7		1.6	3.1	%		<MDL	3.4	6.79	%					
p+0.00*		<MDL	0.6	5.7	%		<MDL	0.3	3.1	%	2	<RDL	0.7	6.8	%					
p+1.00*	0.6	<RDL	0.6	5.7	%	0.5	<RDL	0.3	3.1	%	2.4	<RDL	0.7	6.8	%					
p+10.0(equal/more than)*	2.9	<RDL	2.9	5.7	%	1.6	<RDL	1.6	3.1	%		<MDL	3.4	6.8	%					
p+2.00*	1.3	<RDL	0.6	5.7	%	6.5		0.3	3.1	%	3	<RDL	0.7	6.8	%					
p+3.00*	4.1	<RDL	0.6	5.7	%	25.7		0.3	3.1	%	6.7	<RDL	0.7	6.8	%					
p+4.00*	6.9		0.6	5.7	%	10.8		0.3	3.1	%	8.4		0.7	6.8	%					
p+5.00*	34.3		2.9	5.7	%	23.4		1.6	3.1	%	30.5		3.4	6.8	%					
p+6.00*	11.4		2.9	5.7	%	7.8		1.6	3.1	%	17		3.4	6.8	%					
p+7.00*	14.3		2.9	5.7	%	7.8		1.6	3.1	%	13.6		3.4	6.8	%					
p+8.00*	11.4		2.9	5.7	%	7.8		1.6	3.1	%	13.6		3.4	6.8	%					
p+9.00*	5.7	RDL	2.9	5.7	%	3.1	RDL	1.6	3.1	%		<MDL	3.4	6.8	%					
p-1.00*		<MDL	0.6	5.7	%		<MDL	0.3	3.1	%	1.1	<RDL	0.7	6.8	%					
p-2.00(less than)*		<MDL	0.6	5.7	%		<MDL	0.3	3.1	%	1.6	<RDL	0.7	6.8	%					
p-2.00*		<MDL	0.6	5.7	%		<MDL	0.3	3.1	%		<MDL	0.7	6.8	%					
CV SM2540-G																				
Total Solids*	18		0.005	0.01	%	31.8		0.005	0.01	%	17.8		0.005	0.01	%	40.9		0.005	0.01	%
Total Solids*	48.7		0.005	0.01	%	55.4		0.005	0.01	%	33.4		0.005	0.01	%					
CV SW846 9060 PSEP96																				
Total Organic Carbon	69400		17000	34300	mg/Kg	45000		14000	27900	mg/Kg	127000		15000	29200	mg/Kg					
ES NONE																				
Field Personnel*	BK, CB				none	BK, CB				none	BK, CB				none					
Sampcoordx1*	1258680				ft	1258623	TA			ft	1258516				ft					
Sampcoordy1*	245787				ft	245571	TA			ft	245795				ft					
Sampling Method*	20132				none	20132				none	20132				none					
Sediment Sampling Depth*	17				cm	15				cm	17				cm					
Sediment Sampling Range*	10				cm	10				cm	10				cm					
Sediment Type*	32P12				none	32P12				none	23P18				none					
MT SW846 3050B(MODSB)*SW846 602																				
Antimony, Total, ICP-MS	6.17	J	0.056	0.277	mg/Kg	8.3	J	0.031	0.157	mg/Kg	6.74	J	0.052	0.258	mg/Kg					
Arsenic, Total, ICP-MS	24.9		0.14	0.694	mg/Kg	22.2		0.075	0.381	mg/Kg	17.2		0.14	0.697	mg/Kg					
Cadmium, Total, ICP-MS	1.91		0.067	0.346	mg/Kg	1.06		0.038	0.191	mg/Kg	1.58		0.067	0.349	mg/Kg					
Chromium, Total, ICP-MS	63.9		0.28	1.38	mg/Kg	55.3		0.15	0.764	mg/Kg	48.8		0.28	1.39	mg/Kg					
Copper, Total, ICP-MS	494		0.28	2.77	mg/Kg	288		0.15	1.53	mg/Kg	296		0.28	2.79	mg/Kg					
Lead, Total, ICP-MS	231		0.14	0.694	mg/Kg	160		0.075	0.381	mg/Kg	173		0.14	0.697	mg/Kg					
Nickel, Total, ICP-MS	49.7		0.14	0.694	mg/Kg	43.4		0.075	0.381	mg/Kg	37.1		0.14	0.697	mg/Kg					
Silver, Total, ICP-MS	0.933		0.056	0.277	mg/Kg	0.871		0.031	0.153	mg/Kg	0.674		0.056	0.279	mg/Kg					
Zinc, Total, ICP-MS	722		0.67	3.46	mg/Kg	390		0.38	1.91	mg/Kg	792		0.67	3.49	mg/Kg					
MT SW846 7471B																				
Mercury, Total, CVAA	0.628		0.028	0.282	mg/Kg	0.673		0.016	0.157	mg/Kg	0.412		0.027	0.271	mg/Kg					
OR SW846 3550B*SW846 8082A																				
Aroclor 1016		<MDL	8.2	32.9	ug/Kg		<MDL	7.2	28.9	ug/Kg		<MDL	12	47.9	ug/Kg		<MDL	9.8	39.1	ug/Kg

	Project:	423368-210-1				Project:	423368-210-1				Project:	423368-210-1				Project:	423368-210-1			
	Locator:	CSO-BL-5				Locator:	CSO-BL-6				Locator:	CSO-BL-7				Locator:	CSO-BL-1			
	Descrip:	BALLARD CSO				Descrip:	BALLARD CSO				Descrip:	BALLARD CSO				Descrip:	BALLARD CSO			
	Sample:	L63934-5				Sample:	L63934-6				Sample:	L63934-7				Sample:	L64264-1			
	Matrix:	SE FRSHWTRSED				Matrix:	SE FRSHWTRSED				Matrix:	SE FRSHWTRSED				Matrix:	SE FRSHWTRSED			
	ColDate:	10/14/15 9:11				ColDate:	10/14/15 9:41				ColDate:	10/14/15 8:16				ColDate:	10/14/15 7:54			
	TotalSolid:	18				TotalSolid:	31.8				TotalSolid:	17.8				TotalSolid:	40.9			
	DRY Weight Basis					**DRY Weight Basis**					**DRY Weight Basis**					**DRY Weight Basis**				
Parameters	**Value**	**Qual**	**MDL**	**RDL**	**Units**	**Value**	**Qual**	**MDL**	**RDL**	**Units**	**Value**	**Qual**	**MDL**	**RDL**	**Units**	**Value**	**Qual**	**MDL**	**RDL**	**Units**
Aroclor 1221		<MDL	25	32.9	ug/Kg		<MDL	22	28.9	ug/Kg		<MDL	36	47.9	ug/Kg		<MDL	29	39.1	ug/Kg
Aroclor 1232		<MDL	25	32.9	ug/Kg		<MDL	22	28.9	ug/Kg		<MDL	36	47.9	ug/Kg		<MDL	29	39.1	ug/Kg
Aroclor 1242		<MDL,J	8.2	32.9	ug/Kg	10	<RDL,J	7.2	28.9	ug/Kg		<MDL,J	12	47.9	ug/Kg	14	<RDL,J	9.8	39.1	ug/Kg
Aroclor 1248		<MDL	8.2	32.9	ug/Kg		<MDL	7.2	28.9	ug/Kg		<MDL	12	47.9	ug/Kg		<MDL	9.8	39.1	ug/Kg
Aroclor 1254	98.2		6.6	32.9	ug/Kg	269	J	5.8	28.9	ug/Kg	75.4		9.6	47.9	ug/Kg	122		7.8	39.1	ug/Kg
Aroclor 1260	56.9		8.2	32.9	ug/Kg	77.4	J	7.2	28.9	ug/Kg	58.4		12	47.9	ug/Kg	66.5		9.8	39.1	ug/Kg
Aroclor 1268		<MDL	8.2	32.9	ug/Kg		<MDL	7.2	28.9	ug/Kg		<MDL	12	47.9	ug/Kg	20	<RDL	9.8	39.1	ug/Kg
OR SW846 3550B*SW846 8270D																				
1,2,4-Trichlorobenzene		<MDL	6.8	13.7	ug/Kg		<MDL	6	12	ug/Kg		<MDL	9.9	20	ug/Kg		<MDL	8.1	16.3	ug/Kg
1,2-Dichlorobenzene		<MDL	68.4	68.4	ug/Kg		<MDL	60.1	60.1	ug/Kg		<MDL	99.7	99.7	ug/Kg		<MDL	81.4	81.4	ug/Kg
1,4-Dichlorobenzene		<MDL	103	103	ug/Kg		<MDL	90.3	90.3	ug/Kg		<MDL	150	150	ug/Kg		<MDL	122	122	ug/Kg
1-Methylnaphthalene		<MDL	68	137	ug/Kg		<MDL	60	120	ug/Kg		<MDL	99	200	ug/Kg		<MDL	81	163	ug/Kg
2,4-Dimethylphenol		<MDL	68	137	ug/Kg		<MDL	60	120	ug/Kg		<MDL	99	200	ug/Kg		<MDL	81	163	ug/Kg
2-Methylnaphthalene		<MDL	68	137	ug/Kg		<MDL	60	120	ug/Kg		<MDL	99	200	ug/Kg		<MDL	81	163	ug/Kg
2-Methylphenol		<MDL	68	137	ug/Kg		<MDL	60	120	ug/Kg		<MDL	99	200	ug/Kg		<MDL	81	163	ug/Kg
3-,4-Methylphenol		<MDL	350	684	ug/Kg		<MDL	310	601	ug/Kg		<MDL	510	997	ug/Kg		<MDL	420	814	ug/Kg
Acenaphthene	120	<RDL	68	137	ug/Kg	94	<RDL	60	120	ug/Kg		<MDL	99	200	ug/Kg	100	<RDL	81	163	ug/Kg
Acenaphthylene		<MDL	68	137	ug/Kg	100	<RDL	60	120	ug/Kg		<MDL	99	200	ug/Kg	83	<RDL	81	163	ug/Kg
Anthracene	205		68	137	ug/Kg	227		60	120	ug/Kg	180	<RDL	99	200	ug/Kg	208		81	163	ug/Kg
Benzo(a)anthracene	877		68	137	ug/Kg	881		60	120	ug/Kg	1080		99	200	ug/Kg	1350		81	163	ug/Kg
Benzo(a)pyrene	1110		68	137	ug/Kg	1250		60	120	ug/Kg	1430		99	200	ug/Kg	1990		81	163	ug/Kg
Benzo(b,j,k)fluoranthene	2980		68	137	ug/Kg	2820		60	120	ug/Kg	3740		99	200	ug/Kg	5840		81	163	ug/Kg
Benzo(g,h,i)perylene	419		68	137	ug/Kg	426		60	120	ug/Kg	497		99	200	ug/Kg	733		81	163	ug/Kg
Benzoic Acid		<MDL	1370	1370	ug/Kg		<MDL	1200	1200	ug/Kg		<MDL	2000	2000	ug/Kg		<MDL	1630	1630	ug/Kg
Benzyl Alcohol		<MDL	171	171	ug/Kg		<MDL	150	150	ug/Kg		<MDL	249	249	ug/Kg		<MDL	204	204	ug/Kg
Benzyl Butyl Phthalate	209		103	103	ug/Kg	131		90.3	90.3	ug/Kg	362		150	150	ug/Kg	653		122	122	ug/Kg
Bis(2-Ethylhexyl)Phthalate	7370		140	273	ug/Kg	3340		120	240	ug/Kg	16600		200	398	ug/Kg	25700		160	325	ug/Kg
Carbazole	84	<RDL	68	137	ug/Kg	88	<RDL	60	120	ug/Kg	180	<RDL	99	200	ug/Kg	169		81	163	ug/Kg
Chrysene	1340		68	137	ug/Kg	1370		60	120	ug/Kg	1730		99	200	ug/Kg	2370		81	163	ug/Kg
Dibenzo(a,h)anthracene	110	<RDL	68	137	ug/Kg	120	<RDL	60	120	ug/Kg	130	<RDL	99	200	ug/Kg	207		81	163	ug/Kg
Dibenzofuran		<MDL	68	137	ug/Kg		<MDL	60	120	ug/Kg		<MDL	99	200	ug/Kg		<MDL	81	163	ug/Kg
Diethyl Phthalate		<MDL	140	273	ug/Kg		<MDL	120	240	ug/Kg		<MDL	200	398	ug/Kg		<MDL	160	325	ug/Kg
Dimethyl Phthalate	205		137	137	ug/Kg	150		120	120	ug/Kg		<MDL	200	200	ug/Kg	274		163	163	ug/Kg
Di-N-Butyl Phthalate		<MDL	140	273	ug/Kg		<MDL	120	240	ug/Kg	240	<RDL	200	398	ug/Kg	170	<RDL	160	325	ug/Kg
Di-N-Octyl Phthalate		<MDL	137	137	ug/Kg		<MDL	120	120	ug/Kg		<MDL	200	200	ug/Kg	883		163	163	ug/Kg
Fluoranthene	2360		68	137	ug/Kg	2240		60	120	ug/Kg	2960		99	200	ug/Kg	3500		81	163	ug/Kg
Fluorene	174		68	137	ug/Kg	150		60	120	ug/Kg	140	<RDL	99	200	ug/Kg	165		81	163	ug/Kg
Hexachlorobenzene		<MDL	6.8	13.7	ug/Kg		<MDL	6	12	ug/Kg		<MDL	9.9	20	ug/Kg		<MDL	8.1	16.3	ug/Kg
Hexachlorobutadiene		<MDL	35	68.4	ug/Kg		<MDL	31	60.1	ug/Kg		<MDL	51	99.7	ug/Kg		<MDL	42	81.4	ug/Kg
Indeno(1,2,3-Cd)Pyrene	520		68	137	ug/Kg	523		60	120	ug/Kg	620		99	200	ug/Kg	941		81	163	ug/Kg
Naphthalene		<MDL	68	137	ug/Kg	99	<RDL	60	120	ug/Kg		<MDL	99	200	ug/Kg		<MDL	81	163	ug/Kg
N-Nitrosodiphenylamine		<MDL	171	171	ug/Kg		<MDL	150	150	ug/Kg		<MDL	249	249	ug/Kg		<MDL	204	204	ug/Kg
Pentachlorophenol		<MDL	1030	1030	ug/Kg		<MDL	903	903	ug/Kg		<MDL	1500	1500	ug/Kg		<MDL	1220	1220	ug/Kg
Phenanthrene	774		68	137	ug/Kg	596		60	120	ug/Kg	1060		99	200	ug/Kg	1040		81	163	ug/Kg
Phenol		<MDL	350	1030	ug/Kg		<MDL	310	903	ug/Kg		<MDL	510	1500	ug/Kg		<MDL	420	1220	ug/Kg
Pyrene	2730		68	137	ug/Kg	2760		60	120	ug/Kg	3530		99	200	ug/Kg	4280		81	163	ug/Kg

	Project:	423368-210-1				Project:	423368-210-1				Project:	423368-210-1				Project:	423368-210-1			
	Locator:	CSO-BL-2				Locator:	CSO-BL-3				Locator:	CSO-BL-4				Locator:	CSO-BL-5			
	Descrip:	BALLARD CSO				Descrip:	BALLARD CSO				Descrip:	BALLARD CSO				Descrip:	BALLARD CSO			
	Sample:	L64264-2				Sample:	L64264-3				Sample:	L64264-4				Sample:	L64264-5			
	Matrix:	SE FRSHWTRSED				Matrix:	SE FRSHWTRSED				Matrix:	SE FRSHWTRSED				Matrix:	SE FRSHWTRSED			
	ColDate:	10/14/15 8:30				ColDate:	10/14/15 8:58				ColDate:	10/14/15 8:07				ColDate:	10/14/15 9:11			
	TotalSolid:	44.2				TotalSolid:	55.2				TotalSolid:	39.9				TotalSolid:	48.7			
	DRY Weight Basis					**DRY Weight Basis**					**DRY Weight Basis**					**DRY Weight Basis**				
Parameters	**Value**	**Qual**	**MDL**	**RDL**	**Units**	**Value**	**Qual**	**MDL**	**RDL**	**Units**	**Value**	**Qual**	**MDL**	**RDL**	**Units**	**Value**	**Qual**	**MDL**	**RDL**	**Units**
CV ASTM D422																				
Fines*																				
Gravel*																				
Sand*																				
Silt*																				
Clay*																				
p+0.00*																				
p+1.00*																				
p+10.0(equal/more than)*																				
p+2.00*																				
p+3.00*																				
p+4.00*																				
p+5.00*																				
p+6.00*																				
p+7.00*																				
p+8.00*																				
p+9.00*																				
p-1.00*																				
p-2.00(less than)*																				
p-2.00*																				
CV SM2540-G																				
Total Solids*	44.2		0.005	0.01	%	55.2		0.005	0.01	%	39.9		0.005	0.01	%	48.7		0.005	0.01	%
Total Solids*																				
CV SW846 9060 PSEP96																				
Total Organic Carbon																				
ES NONE																				
Field Personnel*																				
Sampcoordx1*																				
Sampcoordy1*																				
Sampling Method*																				
Sediment Sampling Depth*																				
Sediment Sampling Range*																				
Sediment Type*																				
MT SW846 3050B(MODSB)*SW846 602(																				
Antimony, Total, ICP-MS																				
Arsenic, Total, ICP-MS																				
Cadmium, Total, ICP-MS																				
Chromium, Total, ICP-MS																				
Copper, Total, ICP-MS																				
Lead, Total, ICP-MS																				
Nickel, Total, ICP-MS																				
Silver, Total, ICP-MS																				
Zinc, Total, ICP-MS																				
MT SW846 7471B																				
Mercury, Total, CVAA																				
OR SW846 3550B*SW846 8082A																				
Aroclor 1016		<MDL	9	36.2	ug/Kg		<MDL	7.2	29	ug/Kg		<MDL	10	40.1	ug/Kg		<MDL	8.2	32.9	ug/Kg

	Project:	423368-210-1				Project:	423368-210-1				Project:	423368-210-1				Project:	423368-210-1			
	Locator:	CSO-BL-2				Locator:	CSO-BL-3				Locator:	CSO-BL-4				Locator:	CSO-BL-5			
	Descrip:	BALLARD CSO				Descrip:	BALLARD CSO				Descrip:	BALLARD CSO				Descrip:	BALLARD CSO			
	Sample:	L64264-2				Sample:	L64264-3				Sample:	L64264-4				Sample:	L64264-5			
	Matrix:	SE FRSHWTRSED				Matrix:	SE FRSHWTRSED				Matrix:	SE FRSHWTRSED				Matrix:	SE FRSHWTRSED			
	ColDate:	10/14/15 8:30				ColDate:	10/14/15 8:58				ColDate:	10/14/15 8:07				ColDate:	10/14/15 9:11			
	TotalSolid:	44.2				TotalSolid:	55.2				TotalSolid:	39.9				TotalSolid:	48.7			
	DRY Weight Basis					**DRY Weight Basis**					**DRY Weight Basis**					**DRY Weight Basis**				
Parameters	**Value**	**Qual**	**MDL**	**RDL**	**Units**	**Value**	**Qual**	**MDL**	**RDL**	**Units**	**Value**	**Qual**	**MDL**	**RDL**	**Units**	**Value**	**Qual**	**MDL**	**RDL**	**Units**
Aroclor 1221		<MDL	27	36.2	ug/Kg		<MDL	22	29	ug/Kg		<MDL	30	40.1	ug/Kg		<MDL	25	32.9	ug/Kg
Aroclor 1232		<MDL	27	36.2	ug/Kg		<MDL	22	29	ug/Kg		<MDL	30	40.1	ug/Kg		<MDL	25	32.9	ug/Kg
Aroclor 1242		<MDL,J	9	36.2	ug/Kg	14	<RDL,J	7.2	29	ug/Kg		<MDL,J	10	40.1	ug/Kg		<MDL,J	8.2	32.9	ug/Kg
Aroclor 1248		<MDL	9	36.2	ug/Kg		<MDL	7.2	29	ug/Kg		<MDL	10	40.1	ug/Kg		<MDL	8.2	32.9	ug/Kg
Aroclor 1254	92.5		7.2	36.2	ug/Kg	112		5.8	29	ug/Kg	51.9		8	40.1	ug/Kg	98.2		6.6	32.9	ug/Kg
Aroclor 1260	43.9		9	36.2	ug/Kg	49.6		7.2	29	ug/Kg	25	<RDL	10	40.1	ug/Kg	56.9		8.2	32.9	ug/Kg
Aroclor 1268		<MDL	9	36.2	ug/Kg		<MDL	7.2	29	ug/Kg		<MDL	10	40.1	ug/Kg		<MDL	8.2	32.9	ug/Kg
OR SW846 3550B*SW846 8270D																				
1,2,4-Trichlorobenzene		<MDL	7.5	15.1	ug/Kg		<MDL	6	12.1	ug/Kg		<MDL	8.3	16.7	ug/Kg		<MDL	6.8	13.7	ug/Kg
1,2-Dichlorobenzene		<MDL	75.3	75.3	ug/Kg		<MDL	60.3	60.3	ug/Kg		<MDL	83.5	83.5	ug/Kg		<MDL	68.4	68.4	ug/Kg
1,4-Dichlorobenzene		<MDL	113	113	ug/Kg		<MDL	90.6	90.6	ug/Kg		<MDL	125	125	ug/Kg		<MDL	103	103	ug/Kg
1-Methylnaphthalene		<MDL	75	151	ug/Kg		<MDL	60	121	ug/Kg		<MDL	83	167	ug/Kg		<MDL	68	137	ug/Kg
2,4-Dimethylphenol		<MDL	75	151	ug/Kg		<MDL	60	121	ug/Kg		<MDL	83	167	ug/Kg		<MDL	68	137	ug/Kg
2-Methylnaphthalene		<MDL	75	151	ug/Kg		<MDL	60	121	ug/Kg		<MDL	83	167	ug/Kg		<MDL	68	137	ug/Kg
2-Methylphenol		<MDL	75	151	ug/Kg		<MDL	60	121	ug/Kg		<MDL	83	167	ug/Kg		<MDL	68	137	ug/Kg
3-,4-Methylphenol		<MDL	380	753	ug/Kg		<MDL	310	603	ug/Kg		<MDL	430	835	ug/Kg		<MDL	350	684	ug/Kg
Acenaphthene		<MDL	75	151	ug/Kg	201		60	121	ug/Kg	95	<RDL	83	167	ug/Kg	120	<RDL	68	137	ug/Kg
Acenaphthylene		<MDL	75	151	ug/Kg	100	<RDL	60	121	ug/Kg		<MDL	83	167	ug/Kg		<MDL	68	137	ug/Kg
Anthracene	178		75	151	ug/Kg	388		60	121	ug/Kg	444		83	167	ug/Kg	205		68	137	ug/Kg
Benzo(a)anthracene	751		75	151	ug/Kg	1540		60	121	ug/Kg	1510		83	167	ug/Kg	877		68	137	ug/Kg
Benzo(a)pyrene	889		75	151	ug/Kg	2050		60	121	ug/Kg	1850		83	167	ug/Kg	1110		68	137	ug/Kg
Benzo(b,j,k)fluoranthene	2100		75	151	ug/Kg	4730		60	121	ug/Kg	4460		83	167	ug/Kg	2980		68	137	ug/Kg
Benzo(g,h,i)perylene	342		75	151	ug/Kg	587		60	121	ug/Kg	459		83	167	ug/Kg	419		68	137	ug/Kg
Benzoic Acid		<MDL	1510	1510	ug/Kg		<MDL	1210	1210	ug/Kg		<MDL	1670	1670	ug/Kg		<MDL	1370	1370	ug/Kg
Benzyl Alcohol		<MDL	188	188	ug/Kg		<MDL	151	151	ug/Kg		<MDL	209	209	ug/Kg		<MDL	171	171	ug/Kg
Benzyl Butyl Phthalate		<MDL	113	113	ug/Kg	313		90.6	90.6	ug/Kg	326		125	125	ug/Kg	209		103	103	ug/Kg
Bis(2-Ethylhexyl)Phthalate	4320		150	301	ug/Kg	5310		120	241	ug/Kg	12400		170	333	ug/Kg	7370		140	273	ug/Kg
Carbazole		<MDL	75	151	ug/Kg	166		60	121	ug/Kg	296		83	167	ug/Kg	84	<RDL	68	137	ug/Kg
Chrysene	1120		75	151	ug/Kg	2430		60	121	ug/Kg	2660		83	167	ug/Kg	1340		68	137	ug/Kg
Dibenzo(a,h)anthracene	88	<RDL	75	151	ug/Kg	181		60	121	ug/Kg	160	<RDL	83	167	ug/Kg	110	<RDL	68	137	ug/Kg
Dibenzofuran		<MDL	75	151	ug/Kg	72	<RDL	60	121	ug/Kg		<MDL	83	167	ug/Kg		<MDL	68	137	ug/Kg
Diethyl Phthalate		<MDL	150	301	ug/Kg		<MDL	120	241	ug/Kg		<MDL	170	333	ug/Kg		<MDL	140	273	ug/Kg
Dimethyl Phthalate	187		151	151	ug/Kg	457		121	121	ug/Kg		<MDL	167	167	ug/Kg	205		137	137	ug/Kg
Di-N-Butyl Phthalate		<MDL	150	301	ug/Kg		<MDL	120	241	ug/Kg		<MDL	170	333	ug/Kg		<MDL	140	273	ug/Kg
Di-N-Octyl Phthalate		<MDL	151	151	ug/Kg		<MDL	121	121	ug/Kg	880		167	167	ug/Kg		<MDL	137	137	ug/Kg
Fluoranthene	1880		75	151	ug/Kg	4860		60	121	ug/Kg	3580		83	167	ug/Kg	2360		68	137	ug/Kg
Fluorene	120	<RDL	75	151	ug/Kg	344		60	121	ug/Kg	216		83	167	ug/Kg	174		68	137	ug/Kg
Hexachlorobenzene		<MDL	7.5	15.1	ug/Kg		<MDL	6	12.1	ug/Kg		<MDL	8.3	16.7	ug/Kg		<MDL	6.8	13.7	ug/Kg
Hexachlorobutadiene		<MDL	38	75.3	ug/Kg		<MDL	31	60.3	ug/Kg		<MDL	43	83.5	ug/Kg		<MDL	35	68.4	ug/Kg
Indeno(1,2,3-Cd)Pyrene	439		75	151	ug/Kg	842		60	121	ug/Kg	697		83	167	ug/Kg	520		68	137	ug/Kg
Naphthalene		<MDL	75	151	ug/Kg	91	<RDL	60	121	ug/Kg		<MDL	83	167	ug/Kg		<MDL	68	137	ug/Kg
N-Nitrosodiphenylamine		<MDL	188	188	ug/Kg		<MDL	151	151	ug/Kg		<MDL	209	209	ug/Kg		<MDL	171	171	ug/Kg
Pentachlorophenol		<MDL	1130	1130	ug/Kg		<MDL	906	906	ug/Kg		<MDL	1250	1250	ug/Kg		<MDL	1030	1030	ug/Kg
Phenanthrene	550		75	151	ug/Kg	1900		60	121	ug/Kg	1770		83	167	ug/Kg	774		68	137	ug/Kg
Phenol		<MDL	380	1130	ug/Kg		<MDL	310	906	ug/Kg		<MDL	430	1250	ug/Kg		<MDL	350	1030	ug/Kg
Pyrene	2180		75	151	ug/Kg	5820		60	121	ug/Kg	4240		83	167	ug/Kg	2730		68	137	ug/Kg

	Project:	423368-210-1				Project:	423368-210-1			
	Locator:	CSO-BL-6				Locator:	CSO-BL-7			
	Descrip:	BALLARD CSO				Descrip:	BALLARD CSO			
	Sample:	L64264-6				Sample:	L64264-7			
	Matrix:	SE FRSHWTRSED				Matrix:	SE FRSHWTRSED			
	ColDate:	10/14/15 9:41				ColDate:	10/14/15 8:16			
	TotalSolid:	55.4				TotalSolid:	33.4			
	DRY Weight Basis					**DRY Weight Basis**				
Parameters	**Value**	**Qual**	**MDL**	**RDL**	**Units**	**Value**	**Qual**	**MDL**	**RDL**	**Units**
CV ASTM D422										
Fines*										
Gravel*										
Sand*										
Silt*										
Clay*										
p+0.00*										
p+1.00*										
p+10.0(equal/more than)*										
p+2.00*										
p+3.00*										
p+4.00*										
p+5.00*										
p+6.00*										
p+7.00*										
p+8.00*										
p+9.00*										
p-1.00*										
p-2.00(less than)*										
p-2.00*										
CV SM2540-G										
Total Solids*	55.4		0.005	0.01	%	33.4		0.005	0.01	%
Total Solids*										
CV SW846 9060 PSEP96										
Total Organic Carbon										
ES NONE										
Field Personnel*										
Sampcoordx1*										
Sampcoordy1*										
Sampling Method*										
Sediment Sampling Depth*										
Sediment Sampling Range*										
Sediment Type*										
MT SW846 3050B(MODSB)*SW846 602										
Antimony, Total, ICP-MS										
Arsenic, Total, ICP-MS										
Cadmium, Total, ICP-MS										
Chromium, Total, ICP-MS										
Copper, Total, ICP-MS										
Lead, Total, ICP-MS										
Nickel, Total, ICP-MS										
Silver, Total, ICP-MS										
Zinc, Total, ICP-MS										
MT SW846 7471B										
Mercury, Total, CVAA										
OR SW846 3550B*SW846 8082A										
Aroclor 1016		<MDL	7.2	28.9	ug/Kg		<MDL	12	47.9	ug/Kg

	Project:	423368-210-1				Project:	423368-210-1			
	Locator:	CSO-BL-6				Locator:	CSO-BL-7			
	Descrip:	BALLARD CSO				Descrip:	BALLARD CSO			
	Sample:	L64264-6				Sample:	L64264-7			
	Matrix:	SE FRSHWTRSED				Matrix:	SE FRSHWTRSED			
	ColDate:	10/14/15 9:41				ColDate:	10/14/15 8:16			
	TotalSolid:	55.4				TotalSolid:	33.4			
	DRY Weight Basis					**DRY Weight Basis**				
Parameters	**Value**	**Qual**	**MDL**	**RDL**	**Units**	**Value**	**Qual**	**MDL**	**RDL**	**Units**
Aroclor 1221		<MDL	22	28.9	ug/Kg		<MDL	36	47.9	ug/Kg
Aroclor 1232		<MDL	22	28.9	ug/Kg		<MDL	36	47.9	ug/Kg
Aroclor 1242	10	<RDL,J	7.2	28.9	ug/Kg		<MDL,J	12	47.9	ug/Kg
Aroclor 1248		<MDL	7.2	28.9	ug/Kg		<MDL	12	47.9	ug/Kg
Aroclor 1254	269	J	5.8	28.9	ug/Kg	75.4		9.6	47.9	ug/Kg
Aroclor 1260	77.4	J	7.2	28.9	ug/Kg	58.4		12	47.9	ug/Kg
Aroclor 1268		<MDL	7.2	28.9	ug/Kg		<MDL	12	47.9	ug/Kg
OR SW846 3550B*SW846 8270D										
1,2,4-Trichlorobenzene		<MDL	6	12	ug/Kg		<MDL	9.9	20	ug/Kg
1,2-Dichlorobenzene		<MDL	60.1	60.1	ug/Kg		<MDL	99.7	99.7	ug/Kg
1,4-Dichlorobenzene		<MDL	90.3	90.3	ug/Kg		<MDL	150	150	ug/Kg
1-Methylnaphthalene		<MDL	60	120	ug/Kg		<MDL	99	200	ug/Kg
2,4-Dimethylphenol		<MDL	60	120	ug/Kg		<MDL	99	200	ug/Kg
2-Methylnaphthalene		<MDL	60	120	ug/Kg		<MDL	99	200	ug/Kg
2-Methylphenol		<MDL	60	120	ug/Kg		<MDL	99	200	ug/Kg
3-,4-Methylphenol		<MDL	310	601	ug/Kg		<MDL	510	997	ug/Kg
Acenaphthene	94	<RDL	60	120	ug/Kg		<MDL	99	200	ug/Kg
Acenaphthylene	100	<RDL	60	120	ug/Kg		<MDL	99	200	ug/Kg
Anthracene	227		60	120	ug/Kg	180	<RDL	99	200	ug/Kg
Benzo(a)anthracene	881		60	120	ug/Kg	1080		99	200	ug/Kg
Benzo(a)pyrene	1250		60	120	ug/Kg	1430		99	200	ug/Kg
Benzo(b,j,k)fluoranthene	2820		60	120	ug/Kg	3740		99	200	ug/Kg
Benzo(g,h,i)perylene	426		60	120	ug/Kg	497		99	200	ug/Kg
Benzoic Acid		<MDL	1200	1200	ug/Kg		<MDL	2000	2000	ug/Kg
Benzyl Alcohol		<MDL	150	150	ug/Kg		<MDL	249	249	ug/Kg
Benzyl Butyl Phthalate	131		90.3	90.3	ug/Kg	362		150	150	ug/Kg
Bis(2-Ethylhexyl)Phthalate	3340		120	240	ug/Kg	16600		200	398	ug/Kg
Carbazole	88	<RDL	60	120	ug/Kg	180	<RDL	99	200	ug/Kg
Chrysene	1370		60	120	ug/Kg	1730		99	200	ug/Kg
Dibenzo(a,h)anthracene	120	<RDL	60	120	ug/Kg	130	<RDL	99	200	ug/Kg
Dibenzofuran		<MDL	60	120	ug/Kg		<MDL	99	200	ug/Kg
Diethyl Phthalate		<MDL	120	240	ug/Kg		<MDL	200	398	ug/Kg
Dimethyl Phthalate	150		120	120	ug/Kg		<MDL	200	200	ug/Kg
Di-N-Butyl Phthalate		<MDL	120	240	ug/Kg	240	<RDL	200	398	ug/Kg
Di-N-Octyl Phthalate		<MDL	120	120	ug/Kg		<MDL	200	200	ug/Kg
Fluoranthene	2240		60	120	ug/Kg	2960		99	200	ug/Kg
Fluorene	150		60	120	ug/Kg	140	<RDL	99	200	ug/Kg
Hexachlorobenzene		<MDL	6	12	ug/Kg		<MDL	9.9	20	ug/Kg
Hexachlorobutadiene		<MDL	31	60.1	ug/Kg		<MDL	51	99.7	ug/Kg
Indeno(1,2,3-Cd)Pyrene	523		60	120	ug/Kg	620		99	200	ug/Kg
Naphthalene	99	<RDL	60	120	ug/Kg		<MDL	99	200	ug/Kg
N-Nitrosodiphenylamine		<MDL	150	150	ug/Kg		<MDL	249	249	ug/Kg
Pentachlorophenol		<MDL	903	903	ug/Kg		<MDL	1500	1500	ug/Kg
Phenanthrene	596		60	120	ug/Kg	1060		99	200	ug/Kg
Phenol		<MDL	310	903	ug/Kg		<MDL	510	1500	ug/Kg
Pyrene	2760		60	120	ug/Kg	3530		99	200	ug/Kg